Genie®
A TEREX BRAND

Parts Manual

Serial Number Range

S-60
S-65
S-60X
S-60XC
S-60HC
S-60TRAX
S-65TRAX

from SN S6010-21001 to S6013-26295

Part No. 147769GT
Rev: B.22
June 2024

Technical Publications

Genie has endeavored to deliver the highest degree of accuracy possible. However, continuous improvement of our products is a Genie policy. Therefore, product specifications are subject to change without notice.

Readers are encouraged to notify Genie of errors and send in suggestions for improvement. All communications will be carefully considered for future printings of this and all other manuals.

Contact Us:

Internet: www.genielift.com
e-mail: awp.techpub@terex.com

Find a Manual for this Model

Go to http://www.genielift.com

Use the links to locate Operator's, Parts, Maintenance, and Service and Repair Manuals.

Copyright © 1992 by Terex South Dakota, Inc.

147769GT Rev B.22 June 2024
Fifth Edition, Second Printing

Genie is a registered trademark of Terex South Dakota, Inc. in the USA and many other countries. "S" is a trademark of Terex South Dakota, Inc.

Printed on recycled paper

A TEREX BRAND

Model: S-60
Serial number: S6010-21001
Model year: 2010 **Manufacture date:** 03/01/10
Electrical schematic number: E0186
Machine unladen weight: 20,736lbs / 9,406kg
Foam Tires add 764 lbs/347 kg to weight

Rated work load (including occupants): 500 lb / 227 kg
Maximum number of platfrm occupants: 2
Maximum allowable side force : 150 lb / 670 N
Maximum allowable inclination of the chassis:
Air Tires 2 deg / Foam Tires 4.5 deg
Maximum wind speed : 28 mph/ 12.5 m/s
Maximum platform height : 60 ft 2 in/ 18.3 m
Maximum platform reach : 50 ft 4 in/ 15.3 m
Gradeability: 45%
Country of manufacture: USA
This machine complies with:
ANSI A92.5
CAN B.354.4

Terex South Dakota, Inc.
18340 NE 76th Street
Redmond, WA 98052
USA

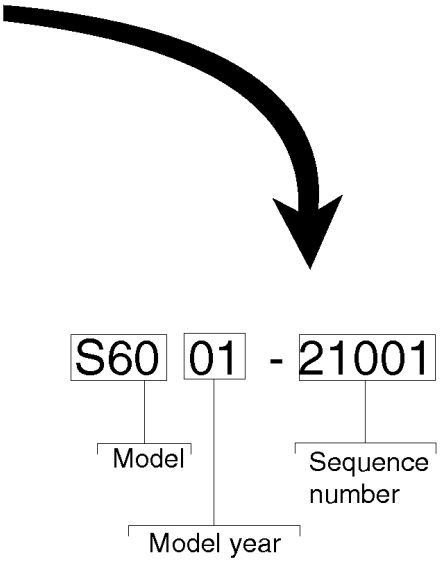

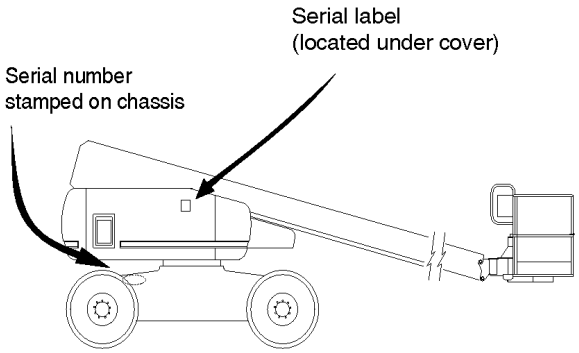

How to Order Parts

Please be prepared with the following information when ordering replacement parts for your Terex or Genie product.

- ☒ **Machine model number**
- ☒ **Machine serial number**
- ☒ **Part number**
- ☒ **Part description and quantity**
- ☒ **Purchase order number**
- ☒ **"Ship to" address**
- ☒ **Desired method of shipment**
- ☒ **Name and telephone number of the authorized distributor in your area**

Use the Service Parts Fax Order Form on the next page and fax your order to our Parts Department.

If you don't know the name of your authorized distributor, or if your area is not currently serviced by an authorized distributor, please call Terex or Genie Industries.

Machine Information

_____

Model

_____

Serial Number

_____

Date of Purchase

_____

Authorized Genie Distributor

_____

Phone Number

North America

Telephone (425)881-1800

Toll Free (800)536-1800 in US and Canada

Fax (425)556-8659

Toll Free fax (888)274-6192

Email AWP.PartsSalesPO@terex.com

http://genielift.com/en

EMEAR (Europe, Middle East, Africa and Russia)

Telephone (31)(165)519 313

Fax (31)(165)511 148

http://genielift.co.uk

Asia Pacific (Genie Singapore)

Telephone +65 6692 7777

Fax +65 6261 8893

http://genielift.com.sg/

Australia

Telephone (61)(7)3456 4444

Fax (61)(7)3456 4466

http://genielift.com.au

South America

Telephone (55)(11)4082 5600

Fax (55)(11)4082 5630

Required Parts

The following parts are required to perform maintenance procedures as outlined in the Genie S-60 and S-65 Service Manual.

All Models:

Description	Part No.
Hydrauilc Tank Filter	88917
Medium Pressure Filter	60857
High Pressure Filter	60857
Dielectric Grease	66399
Lithium Based Grease	(source locally)
Drive Hub Oil (refer to Service Manual)	(source locally)

Perkins 404-22 Models:

Description	Part No.
Air Filter Element	62420
Fuel/water Separator Element	62433
Engine Oil Filter	94762
V-belt	89765
Fuel Filter	62421

Deutz D2011-L03i Models:

Description	Part No.
Air Filter	62420
Fuel/water Separator Element	29560
Engine Oil Filter	49924
V-belt	32698

Deutz TD2011-L04i Models:

Description	Part No.
Air Filter	62425
Fuel/water Separator Element	29560
Engine Oil Filter	49924
V-belt	58630

Ford DSG-423 EFI Models:

Description	Part No.
Fuel Pre-Filter	119984
Engine Oil Filter	119139
Air Filter Element	77295
Serpentine Belt	119138
PCV Valve	119474
Spark Plug	119495

Recommended Parts

Description	Part No.
Genie Blue Paint, 1 Gallon	32150
Genie Blue Paint, 12 Ounce Aerosol	1484
Genie Gray Paint, 1 Gallon	32151
Genie Gray Paint, 12 Ounce Aerosol	1268
Plug and Cap Kit (for ORFS fittings)	49613
Protractor Kit	58351

Manuals

Genie Industries offers the following support documents for these models:

Title	Part No.
EMI Safety Manual	27581
Manual of Responsibilities ANSI A92.5	31779

Service Parts Fax Order Form

TEREX CORPORATION

Fax to: (425) 556-8659 or Toll Free: 888-274-6192
International: +1-425-556-8659

Please fill out completely

Date _____ Account Number _____

Your Name _____ Your Fax Number _____

_____ Your Phone Number _____

Bill To _____ Ship To _____

_____ _____

_____ _____

_____ _____

Purchase Order Number _____ Ship Via _____

Model(s) _____ **Serial No.(s)** _____

Optional Equipment _____

Part Number	Description	Quantity	Price

All back-ordered parts will be shipped when available via the same ship method as the original order unless Noted below:

- ☐ Ship complete order only - No back orders
- ☐ Ship all available parts and contact customer on disposition of back-ordered parts
- ☐ Other (please specify)

Description **Page**

100 Decals 12

101.1 S-60 Decals with Word, Hydraulic Tank Side (Australia) 12
102.1 S-60 Decals with Word, Engine Side (Australia) 16
103.1 S-60 Decals with Word, Boom (Australia) 18
104.1 S-60 Decals with Word, Platform (Australia) 20
105.1 S-60 Decals with Symbol, Hydraulic Tank Side (CE) 22
106.1 S-60 Decals with Symbol, Engine Side (CE) 24
107.1 S-60 Decals with Symbol, Boom (CE) 26
108.1 S-60 Decals with Symbol, Platform (CE) 28
109.1 S-65 Decals with Word, Hydraulic Tank Side (ANSI & Australia) 30
110.1 S-65 Decals with Word, Engine Side (ANSI & Australia) 34
111.1 S-65 Decals with Word, Boom (ANSI & Australia) 36
112.1 S-65 Decals with Word, Platform (ANSI & Australia) 38
113.1 S-65 Decals with Symbol, Hydraulic Tank Side (ANSI & CE) 40
114.1 S-65 Decals with Symbol, Engine Side (ANSI & CE) 42
115.1 S-65 Decals with Symbol, Boom (ANSI & CE) 44
116.1 S-65 Decals with Symbol, Platform (ANSI & CE) 46
117.1 S-60X Decals with Word, Hydraulic Tank Side (ANSI) 48
118.1 S-60X Decals with Word, Engine Side (ANSI) 52
119.1 S-60X Decals with Word, Boom (ANSI) 54
120.1 S-60X Decals with Word, Platform (ANSI) 56
121.1 S-60X Decals with Symbol, Hydraulic Tank Side (ANSI) 58
122.1 S-60X Decals with Symbol, Engine Side (ANSI) 60
123.1 S-60X Decals with Symbol, Boom (ANSI) 62
124.1 S-60X Decals with Symbol, Platform (ANSI) 64
125.1 S-60XC Decals with Word, Hydraulic Tank Side (ANSI) 66
126.1 S-60XC Decals with Word, Engine Side (ANSI) 70
127.1 S-60XC Decals with Word, Boom (ANSI) 72
128.1 S-60XC Decals with Word, Platform (ANSI) 74
129.1 S-60XC Decals with Symbol, Hydraulic Tank Side (ANSI) 76
130.1 S-60XC Decals with Symbol, Engine Side (ANSI) 78
131.1 S-60XC Decals with Symbol, Boom (ANSI) 80
132.1 S-60XC Decals with Symbol, Platform (ANSI) 82
133.1 S-60TX Decals with Word, Hydraulic Tank Side (ANSI & Australia) 84
134.1 S-60TX Decals with Word, Engine Side (ANSI & Australia) 88
135.1 S-60TX Decals with Word, Boom (ANSI & Australia) 90
136.1 S-60TX Decals with Word, Platform (ANSI & Australia) 92
137.1 S-60TX Decals with Symbol, Hydraulic Tank Side (ANSI & CE) 96
138.1 S-60TX Decals with Symbol, Engine Side (ANSI & CE) 98
139.1 S-60TX Decals with Symbol, Boom (ANSI & CE) 100
140.1 S-60TX Decals with Symbol, Platform (ANSI & CE) 102

Description — Page

141.1 S-65TX Decals with Word, Hydraulic Tank Side (ANSI & Australia) 104
142.1 S-65TX Decals with Word, Engine Side (ANSI & Australia) 108
143.1 S-65TX Decals with Word, Boom (ANSI & Australia) 110
144.1 S-65TX Decals with Word, Platform (ANSI & Australia) 112
145.1 S-65TX Decals with Symbol, Hydraulic Tank Side (ANSI & CE) 114
146.1 S-65TX Decals with Symbol, Engine Side (ANSI & CE) 116
147.1 S-65TX Decals with Symbol, Boom (ANSI & CE) 118
148.1 S-65TX Decals with Symbol, Platform (ANSI & CE) 120
149.1S-60HC Decals with Symbol, Hydraulic Tank Side (CE) 122
150.1 S-60HC Decals with Symbol, Engine Side (CE) 124
151.1 S-60HC Decals with Symbol, Boom (CE) 126
152.1 S-60HC Decals with Symbol, Platform (CE) 128

200 Drive Chassis Components 130

201.1 Steer End (to SN 26295), S-60 130
201.2 Steer End (to SN 26295), S-65 140
201.3 Steer End (from SN 26296), S-60 150
201.4 Steer End (from SN 26296), S-65 160
202.1 Non-steer End, S-60 170
202.2 Non-steer End, S-65 178
203.1 Oscillate Valve, S-60 186
203.2 Oscillate Valve, S-65 188
204.1 TraX Option Steer End, S-60 190
204.2 TraX Option Steer End, S-65 192
205.1 TraX Option Non-Steer End, S-60 194
205.2 TraX Option Non-Steer End, S-65 196
206.1 TraX Option Components 198

300 Turntable Components 204

301.1 Tank Side - View 1, S-60 204
301.2 Tank Side - View 1, S-65 208
302.1 Tank Side - View 2 212
303.1 Turntable Covers, S-60 218
303.2 Turntable Covers, S-65 222
304.1 Engine Side 224
305.1 Ground Control Box - View 1, S-60 232
305.2 Ground Control Box - View 1, S-65 236
306.1 Ground Control Box - View 2 240
307.1 Wire Harness Diagram, S-60 244
307.2 Wire Harness Diagram, S-65 250
308.1 S-60 HC Turntable - View 1 254
309.1 S-60 HC Turntable - View 2 256

Description **Page**

400 Manifolds and Pumps 258

401.1 Function Manifold 258
402.1 Traction Manifold, 2WD 266
403.1 Traction Manifold, 4WD (to serial number 21231) 268
403.2 Traction Manifold, 4WD (from serial number 21232) 270
404.1 Platform Rotate and Jib Boom/Platform Rotate Manifold 272
405.1 Pumps 274
406.1 Brake and 2 Speed Manifold (to SN 25201) 276
406.2 Brake and 2 Speed Manifold (from SN 25202) 278

500 Engine Components 280

501.1 Deutz D2011L03i 280
502.1 Perkins 404-22 288
503.1 Ford DSG-423 Engine - View 1 (to SN 24508) 298
504.1 Ford DSG-423 Engine - View 2 (to SN 24508) 302
505.1 Ford DSG-423 Engine - View 3 (to SN 24508) 306
506.1 Ford DSG-423 Engine - View 4 (to SN 24508) 312
507.1 Deutz TD2011-L04i Engine - View 1 318
508.1 Deutz TD2011-L04i Engine - View 2 324
509.1 Ford MSG-425 EFI Engine - View 1 (from SN 24509) 328
510.1 Ford MSG-425 EFI Engine - View 2 (from SN 24509) 332
511.1 Ford MSG-425 EFI Engine - View 3 (from SN 24509) 336
512.1 Ford MSG-425 EFI Engine - View 4 (from SN 24509) 342

600 Boom Structure Components 348

601.1 Linkage Assembly, S-60 348
601.2 Linkage Assembly, S-65 356
602.1 Boom Components - View 1 364
603.1 Boom Components - View 2 370
604.1 Boom Limit Switch - S-60X, S-60XC and S-60 TraX (ANSI) 374
605.1 Boom End Components 376
606.1 Boom End Components - S-65 378
607.1 Boom End Components - S-60 HC 382
608.1 Boom End Components - S-60X and S-60XC 386
609.1 Boom End Components - S-60 and S-65 CE Load Sense 388
610.1 S-60 HC Primary Boom Components 392
611.1 Cable Track (to SN 22585) 394
611.2 Cable Track (from SN 22586) 398

700 Platform Components 402

701.1 Platform Installation, S-60 402

Description — Page

701.2 Platform Installation, S-65 406
702.1 Platform Control Box - View 1 410
703.1 Platform Control Box - View 2, S-60 416
703.2 Platform Control Box - View 2, S-65 420
704.1 Joysticks, S-60 424
704.2 Joysticks, S-65 426

800 Hydraulic Hoses and Fittings 428

801.1 Function Manifold - View 1 428
802.1 Function Manifold - View 2 432
803.1 4WD Traction Manifold 436
804.1 2WD Traction Manifold 440
805.1 Oscillate Option 442
806.1 Hydraulic Generator Option (to SN 21396) 444
806.2 Hydraulic Generator Option (from SN 21397) 446
807.1 Hydraulic Oil Cooler Option 448
808.1 Welder Option (to SN 26173) 450
808.2 Welder Option (from SN 26174) 452

900 Accessories 454

901.1 Alarm and Beacon Package 454
902.1 Platform Accessories 456
903.1 Air Line and Power to Platform, S-60 460
903.2 Air Line and Power to Platform, S-65 464
904.1 Tri-Entry Platform Option 468
905.1 Gauge Option 470
906.1 Hydraulic Oil Cooler Option 472
907.1 Cold Start Package (to SN 23597) 474
907.2 Cold Start Package (from SN 23598) 476
908.1 Hostile Environment Package, Boom Wipers 482
909.1 Hostile Environment Package, Turntable Components 484
910.1 Hostile Environment Package, Cylinder Bellows and Cable Track Protection 486
911.1 Hostile Environment Package, Engine Air Pre-Cleaners 488
912.1 Welder Option - Chassis Components (to SN S-6013-26173) 490
912.2 Welder Option - Chassis Components (from SN S-6013-26174) 496
913.1 Welder Option - Platform Components (to SN S-6013-26173) 502
913.2 Welder Option - Platform Components (from SN S-6013-26174) 506
914.1 Welder Option - Generator Components 510
915.1 Aircraft Protection Package, S-65 and S-65 TraX 512
916.1 Aircraft Protection Package, Deluxe, S-65 and S-65 TraX 516
917.1 Panel Cradle Option 520
918.1 Work Lights / Drive Lights 522

Description	Page
918.2 Work Lights / Drive Lights	524
919.1 Generator Option	526
920.1 Operator Protective Structure	530
921.1 Tow Package, S-60	532
922.1 Fall Arrest Bar	534
923.1 Lift Guard Sensing Option (from SN S6012-24492)	536
Part Number Index	**538**

101.1 S-60 Decals with Word, Hydraulic Tank Side (Australia)

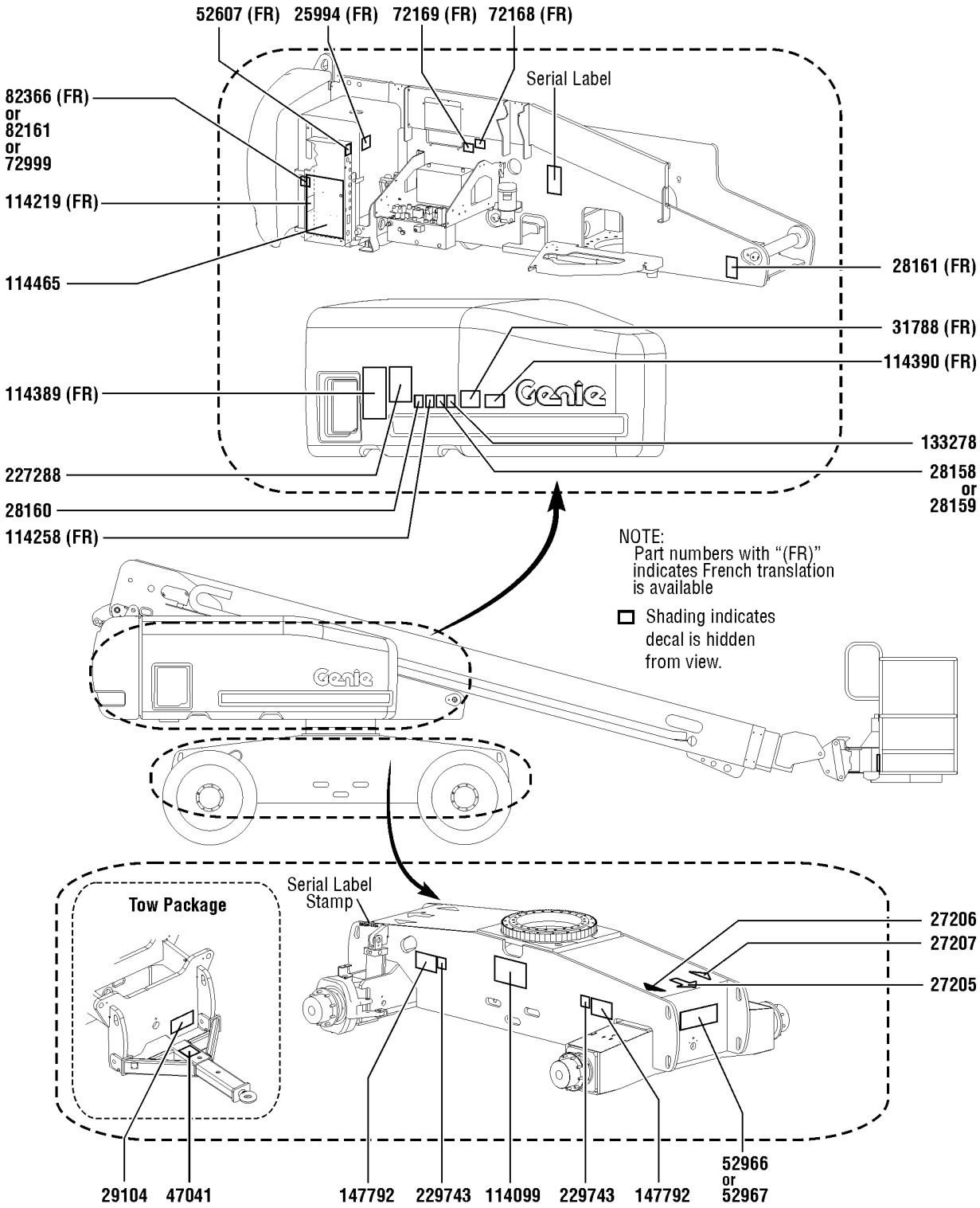

101.1 S-60 Decals with Word, Hydraulic Tank Side (Australia)

Item	Part No.	Description	Qty.
1	25994GT	DECAL,NOTICE,SHUTOFF VALVES	1
2	27205GT	DECAL,ARROW YELLOW LRG 9"	1
3	27206GT	DECAL,TRIANGLE,BLUE	1
4	27207GT	DECAL,TRIANGLE,YELLOW	1
5	28158GT	DECAL,LABEL,UNLEADED GAS ONLY	1
6	28159GT	DECAL,DIESEL	1
7	28160GT	DECAL,LABEL,LIQUID PROPANE Option, LPG tank	1
8	28161GT	DECAL,WARN,CRUSH HAZARD HAND	1
9	29104GT	DECAL,TOWING INSTRUCTIONS Option, tow package	1
10	31788GT	DECAL,DANGER,BATTERY SAFETY***	1
11	47041GT	DECAL,CAUTION,TOWING SPEED Option, tow package	1
12	52607GT	DECAL,LABEL,TEST*** Ford only	1
13	52966GT	DECAL,COSMETIC,4 X 2	1
14	52967GT	DECAL,COSMETIC,4 X 4	1
15	72168GT	DECAL,LABEL,STARTER BATTERY	1
16	72169GT	DECAL,LABEL,CONTROLS BATTERY	1
17	72999GT	DECAL,LABEL,PETRO CANADA***	1
18	82161GT	DECAL,LABEL,UCON HYDROLUBE	1
19	82366GT	DECAL,CHEVRON RANDO HD	1
20	114099GT	DECAL,LABEL,TRANSPORT DIAGRAM	1
21	114219GT	DECAL,LABEL,RELAYS,S60&65	1
22	114258GT	DECAL,DANGER,NO SMOKING	1
23	114389GT	DECAL,DANGER,GENERAL SAFETY	1
24	114390GT	DECAL,DANGER,ELECT HAZARD***	1
25	114465GT	DECAL GROUND CONTROL BOX	1
26	133278GT	DECAL,LOW/ULTRA LOW SULFR FUEL Diesel models only	1
27	147792GT	DANGER,TIPOVR,TIRES FF ONLY	2
28	227288GT	DECAL, OPERATING INSTRUCTIONS	1

101.1 S-60 Decals with Word, Hydraulic Tank Side (Australia)

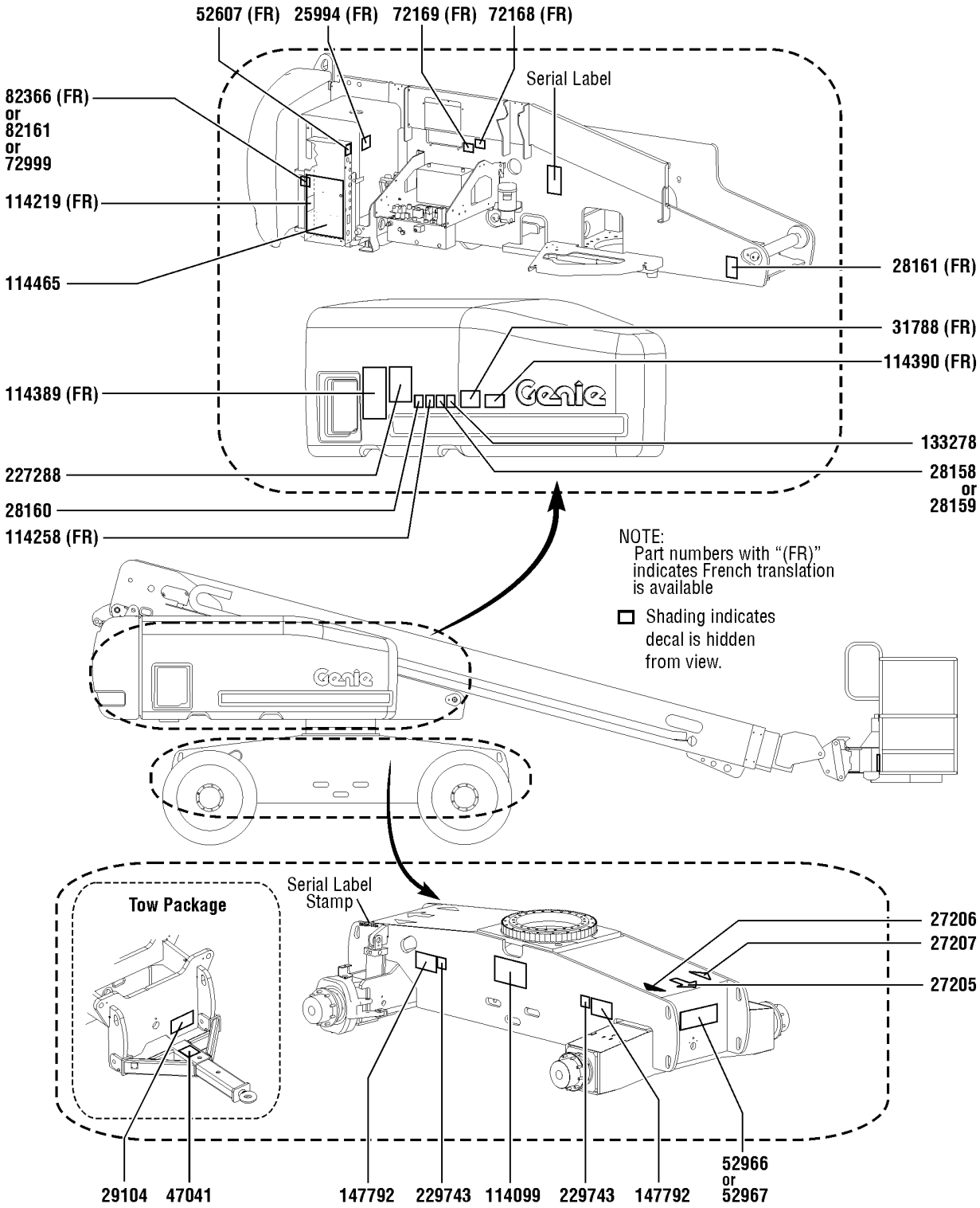

101.1 S-60 Decals with Word, Hydraulic Tank Side (Australia)

Item	*Part No.*	*Description*	*Qty.*
29	229743GT	DECAL,LABEL,WHEEL LOAD S60/60X	2

102.1 S-60 Decals with Word, Engine Side (Australia)

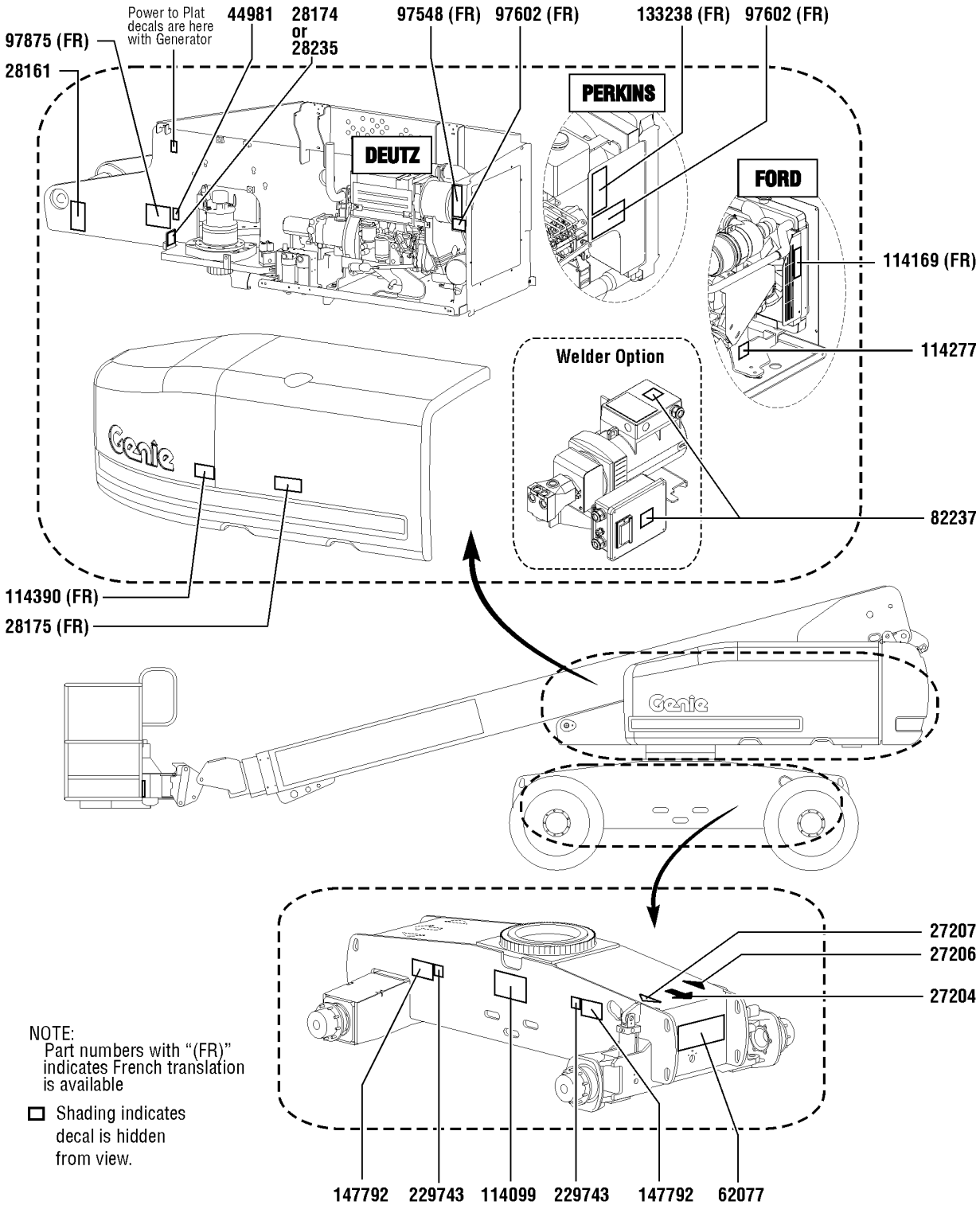

102.1 S-60 Decals with Word, Engine Side (Australia)

Item	Part No.	Description	Qty.
1	27204GT	DECAL,ARROW BLUE	1
2	27206GT	DECAL,TRIANGLE,BLUE	1
3	27207GT	DECAL,TRIANGLE,YELLOW	1
4	28161GT	DECAL,WARN,CRUSH HAZARD HAND	1
5	28174GT	DECAL,POWER TO PLATFORM 230V	1
6	28175GT	DECAL,WARNING-COMPART ACCESS	1
7	28235GT	DECAL,POWER TO PLATFORM 115V	1
8	44981GT	DECAL,LABEL,AIRLINE 110 PSI Option,airline to plat	1
9	62077GT	DECAL,COSMETIC,S60	1
10	82237GT	DECAL,DANGER,HIGH VOLTAGE Option, welder	2
11	97548GT	DECAL,ENGINE SPEC,DEUTZ 2011	1
12	97602GT	DECAL,EXPLOSION HAZARD	1
13	97875GT	DECAL,WARN.WELD LINE INST.WORD Option, weld cable line	1
14	114099GT	DECAL,LABEL,TRANSPORT DIAGRAM	1
15	114169GT	DECAL,FORD ENGINE SPEC DSG423	1
16	114277GT	DECAL,LABEL,BELT ROUTING DSG	1
17	114390GT	DECAL,DANGER,ELECT HAZARD***	1
18	133238GT	DECAL,ENGINE SPEC,PERKINS***	1
19	147792GT	DANGER,TIPOVR,TIRES FF ONLY	2
20	229743GT	DECAL,LABEL,WHEEL LOAD S60/60X	2

103.1 S-60 Decals with Word, Boom (Australia)

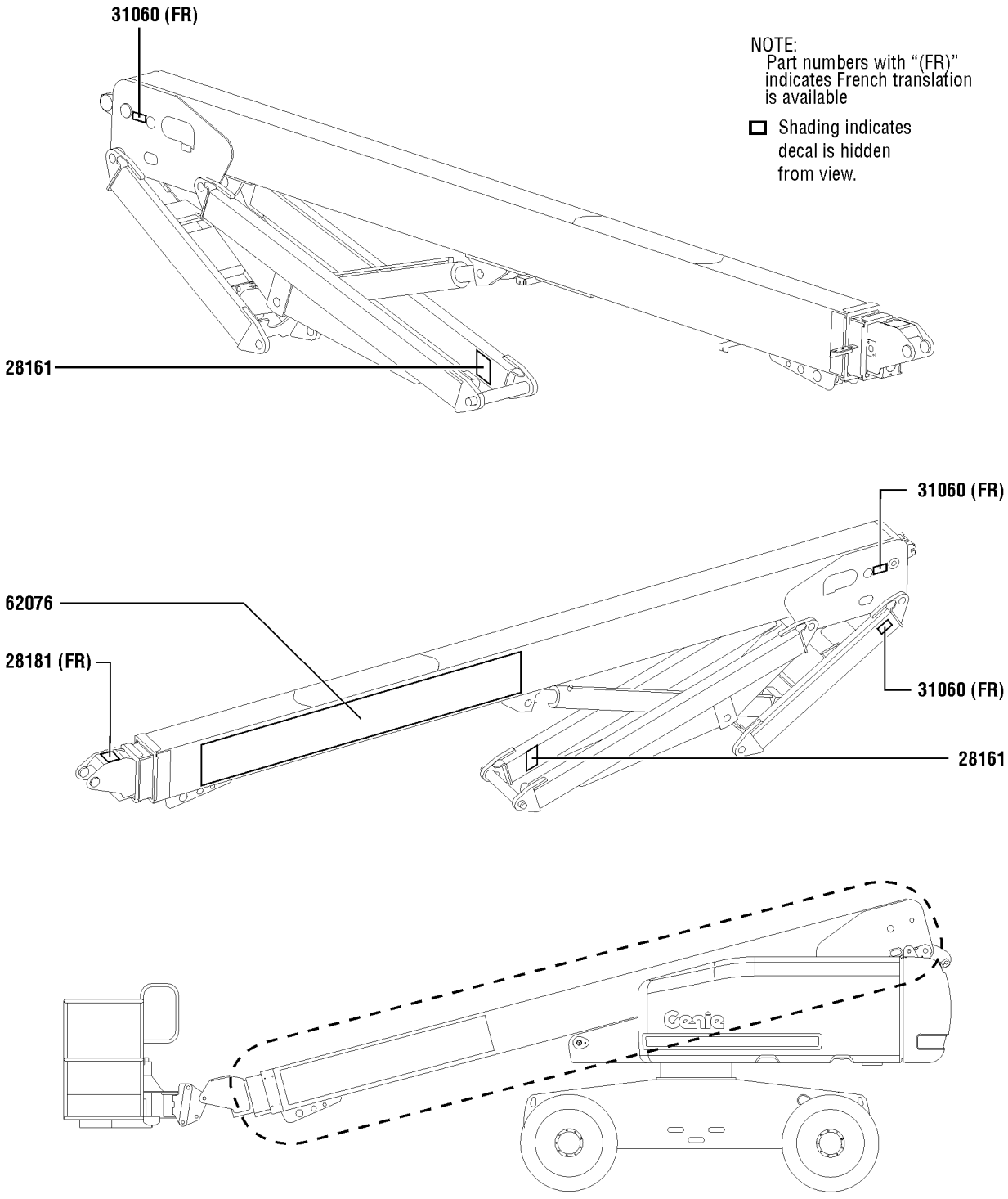

103.1 S-60 Decals with Word, Boom (Australia)

Item	*Part No.*	*Description*	*Qty.*
1	28161GT	DECAL,WARN,CRUSH HAZARD HAND	2
2	28181GT	DECAL,WARN,FALL HAZARD	1
3	31060GT	DECAL,DANGER DO NOT ALTER SWTC	3
4	62076GT	DECAL,COSMETIC,GENIE S-60	1

104.1 S-60 Decals with Word, Platform (Australia)

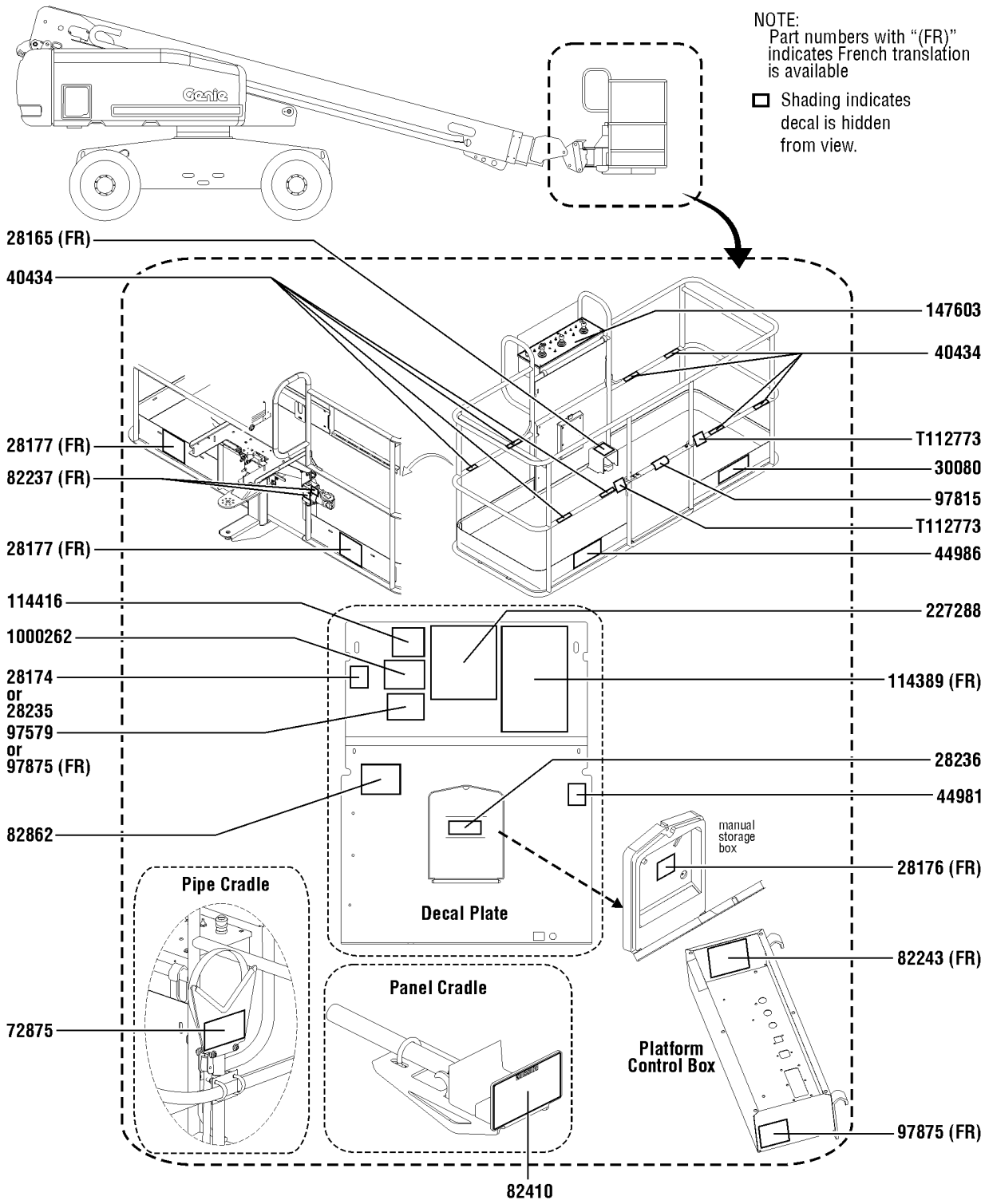

104.1 S-60 Decals with Word, Platform (Australia)

Item	Part No.	Description	Qty.
A	1251643GT	DECAL KIT,PLAT,S60/65 WRD,ANSI/AUS Platform kit	
1	28165GT	DECAL,INSTRUCT,FOOTSWITCH OPER	1
2	28174GT	DECAL,POWER TO PLATFORM 230V	1
3	28176GT	DECAL,LABEL,MANUAL NOT HERE	1
4	28177GT	DECAL,WARN,CRUSH HAZARD PLAT	2
5	28235GT	DECAL,POWER TO PLATFORM 115V	1
6	28236GT	DECAL,WARN,IMPROPER OPERATION	1
7	30080GT	DECAL,NOTICE,MAX LOAD 500 LBS	1
8	40434GT	DECAL,LANYARD ANCHORAGE POINT	8
9	44981GT	DECAL,LABEL,AIRLINE 110 PSI Option, airline to plat	1
10	44986GT	DECAL,INSTR,SIDE FRC/WIND,AUS	1
11	72875GT	DECAL,WARNING,PIPE CRADLE,BOOM Option, pipe cradle	2
12	82237GT	DECAL,DANGER,HIGH VOLTAGE Option, welder	2
13	82243GT	DECAL FAULT CODE	1
14	82410GT	DECAL,WARNING,PANEL CRADLE Option, panel cradle	2
15	82862GT	DECAL,FIRE EXTINGUISHER Option, welder	1
16	97579GT	DECAL,DANGER,TIP-OVER,WELDER** Option, welder	1
17	97815GT	DECAL,LABEL,LOWER MIDRAIL	1
18	97875GT	DECAL,WARN.WELD LINE INST.WORD Option, weld cable line	2
19	114389GT	DECAL,DANGER,GENERAL SAFETY	1
20	114416GT	DECAL,DANGER,TIPOVER,TILT	1
21	147603GT	DECAL, PLAT CNTL PNL	1
22	227288GT	DECAL, OPERATING INSTRUCTIONS	1
23	1000262GT	DECAL,DANGER,TIP OVER,PLAT	1
24	T112773GT	TAPE, PROTECTIVE MASK	2

105.1 S-60 Decals with Symbol, Hydraulic Tank Side (CE)

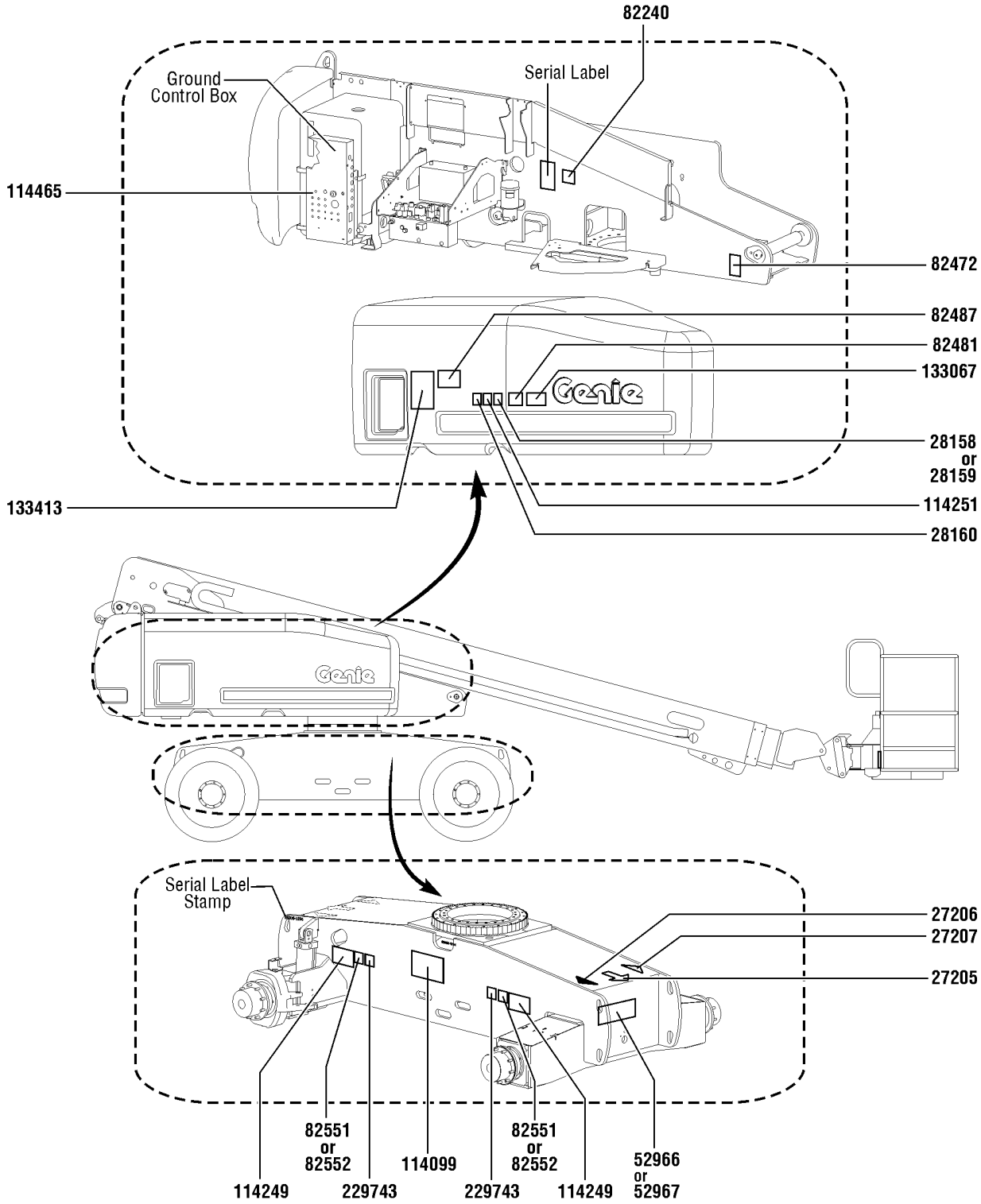

105.1 S-60 Decals with Symbol, Hydraulic Tank Side (CE)

Item	Part No.	Description	Qty.
1	27205GT	DECAL,ARROW YELLOW LRG 9"	1
2	27206GT	DECAL,TRIANGLE,BLUE	1
3	27207GT	DECAL,TRIANGLE,YELLOW	1
4	28158GT	DECAL,LABEL,UNLEADED GAS ONLY	1
5	28159GT	DECAL,DIESEL	1
6	28160GT	DECAL,LABEL,LIQUID PROPANE Option, LPG tank	1
7	52966GT	DECAL,COSMETIC,4 X 2	1
8	82240GT	DECAL,LABEL,105 DB	1
9	82472GT	DECAL,WARNING,CRUSHING HAZARD	1
10	82481GT	DECAL,SYMBOL-BATTERY SAFETY	1
11	82487GT	DECAL,SYMBOL-READ THE MANUAL	1
12	82551GT	DECAL,LABEL,TIRE PRESSURE	2
13	82552GT	DECAL,LABEL,TIRE PRESS HF Option, hi-floatation tires	2
14	82967GT	DECAL KIT,SYMBOLS,Z34IC	1
15	114099GT	DECAL,LABEL,TRANSPORT DIAGRAM	1
16	114249GT	DECAL,LABEL,TIPOVER,TIRES,SYMB	2
17	114251GT	DECAL,LABEL,NO SMOKING,SYMB	1
18	114465GT	DECAL GROUND CONTROL BOX	1
19	133067GT	DECAL,DANGER,ELEC.HAZ.STAY CLR	1
20	133413GT	DECAL,EMERGENCY LOWERING	1
21	229743GT	DECAL,LABEL,WHEEL LOAD S60/60X	2

106.1 S-60 Decals with Symbol, Engine Side (CE)

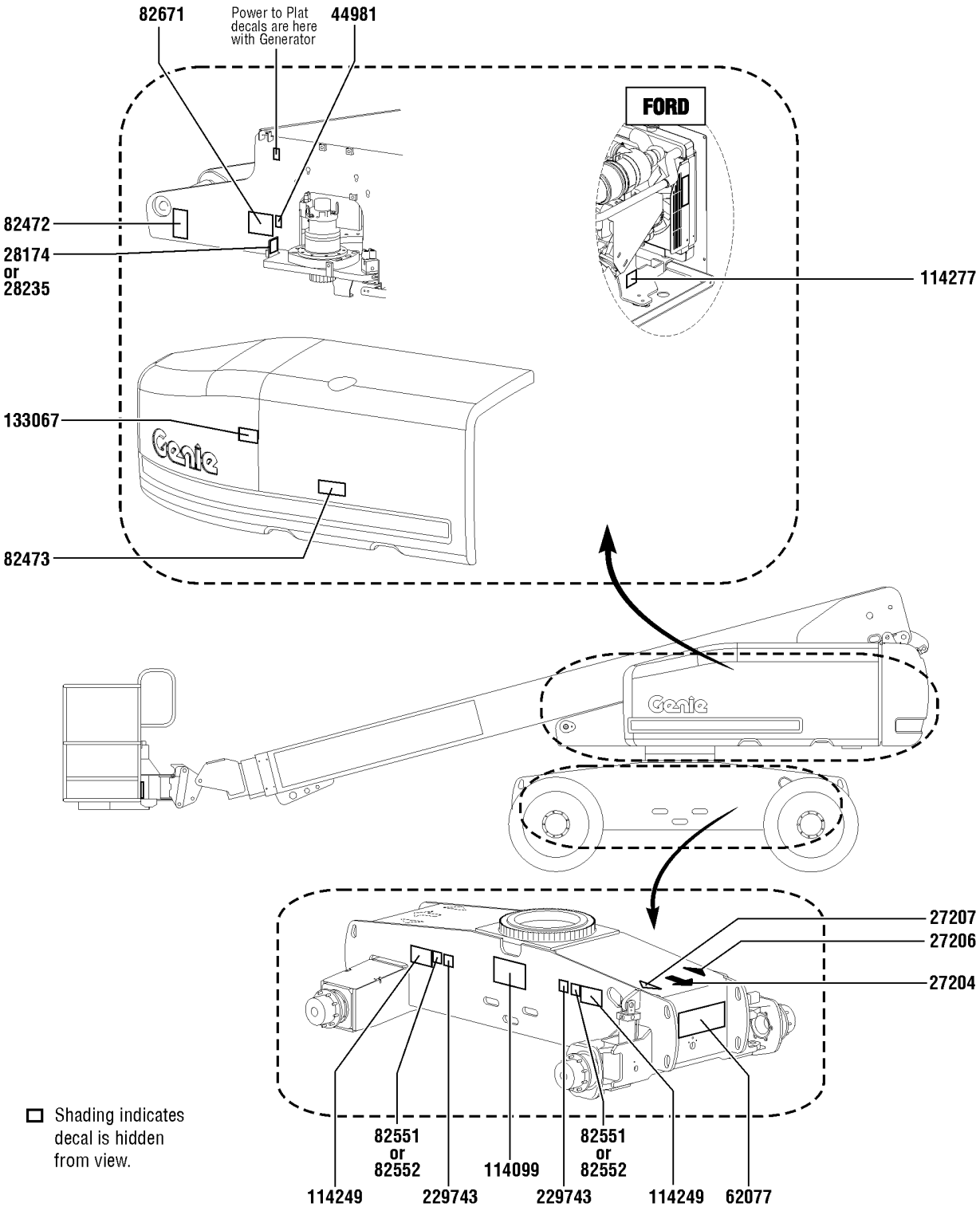

106.1 S-60 Decals with Symbol, Engine Side (CE)

Item	Part No.	Description	Qty.
1	27204GT	DECAL,ARROW BLUE	1
2	27206GT	DECAL,TRIANGLE,BLUE	1
3	27207GT	DECAL,TRIANGLE,YELLOW	1
4	28174GT	DECAL,POWER TO PLATFORM 230V	1
5	28235GT	DECAL,POWER TO PLATFORM 115V	1
6	44981GT	DECAL,LABEL,AIRLINE 110 PSI Option, airline to plat	1
7	62077GT	DECAL,COSMETIC,S60	1
8	82472GT	DECAL,WARNING,CRUSHING HAZARD	1
9	82473GT	DECAL,SYMBOL-COMP ACCESS	1
10	82551GT	DECAL,LABEL,TIRE PRESSURE	2
11	82552GT	DECAL,LABEL,TIRE PRESS HF Option, hi-floatation tires	2
12	82671GT	DECAL,LABEL,WELD LINE INST,SYM Option, weld cable line	1
13	114099GT	DECAL,LABEL,TRANSPORT DIAGRAM	1
14	114249GT	DECAL,LABEL,TIPOVER,TIRES,SYMB	2
15	114277GT	DECAL,LABEL,BELT ROUTING DSG	1
16	133067GT	DECAL,DANGER,ELEC.HAZ.STAY CLR	1
17	229743GT	DECAL,LABEL,WHEEL LOAD S60/60X	2

107.1 S-60 Decals with Symbol, Boom (CE)

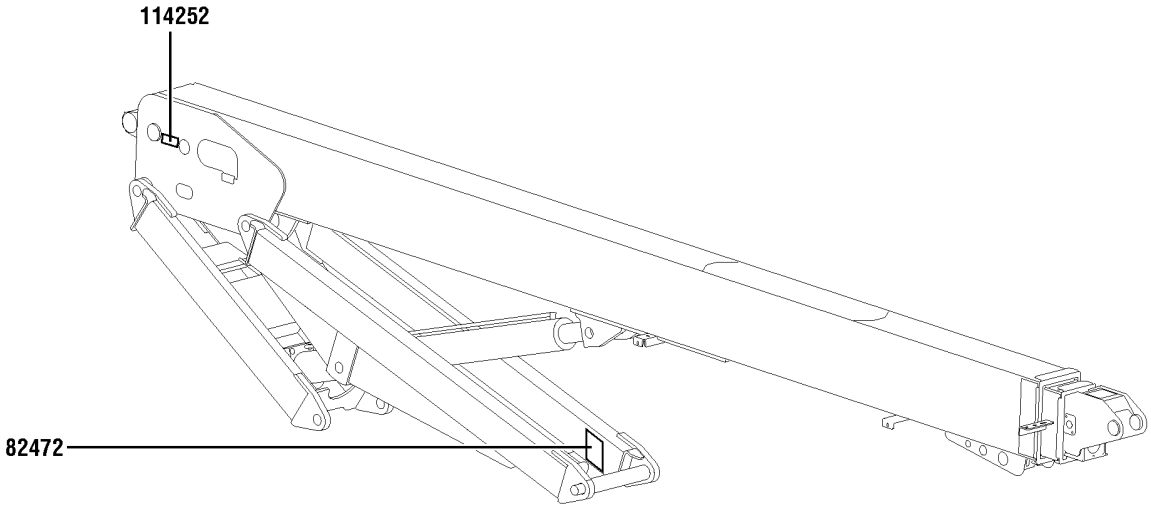

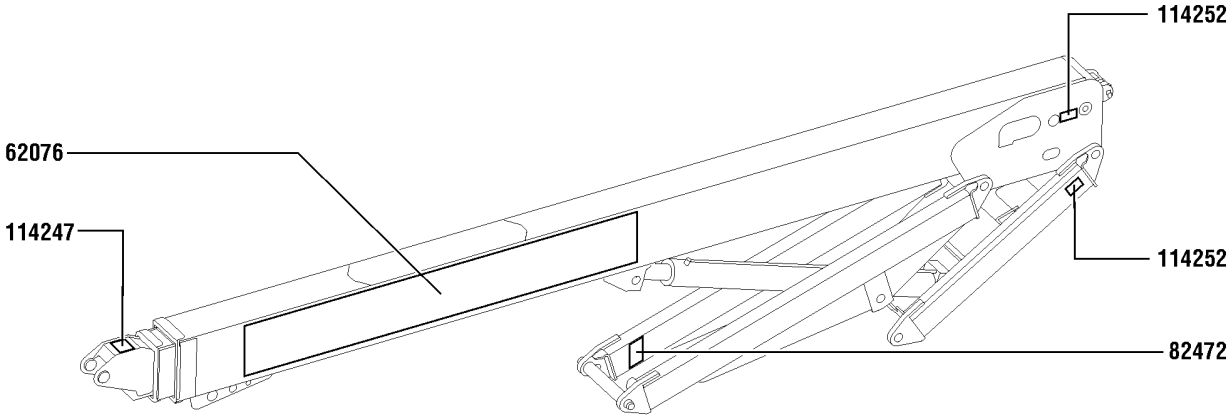

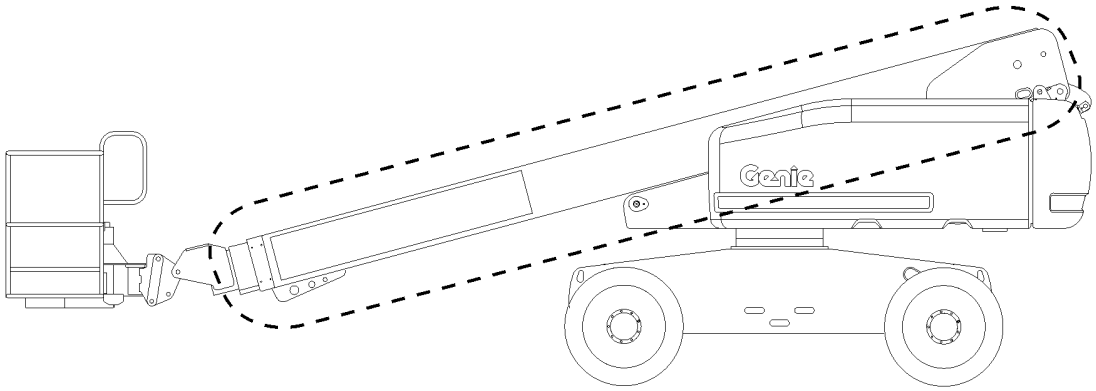

107.1 S-60 Decals with Symbol, Boom (CE)

Item	*Part No.*	*Description*	*Qty.*
1	62076GT	DECAL,COSMETIC,GENIE S-60	1
2	82472GT	DECAL,WARNING,CRUSHING HAZARD	2
3	114247GT	DECAL,LABEL,FALL HAZARD***	1
4	114252GT	DECAL,LABEL,TIP OVER LMT SWTCH	3

108.1 S-60 Decals with Symbol, Platform (CE)

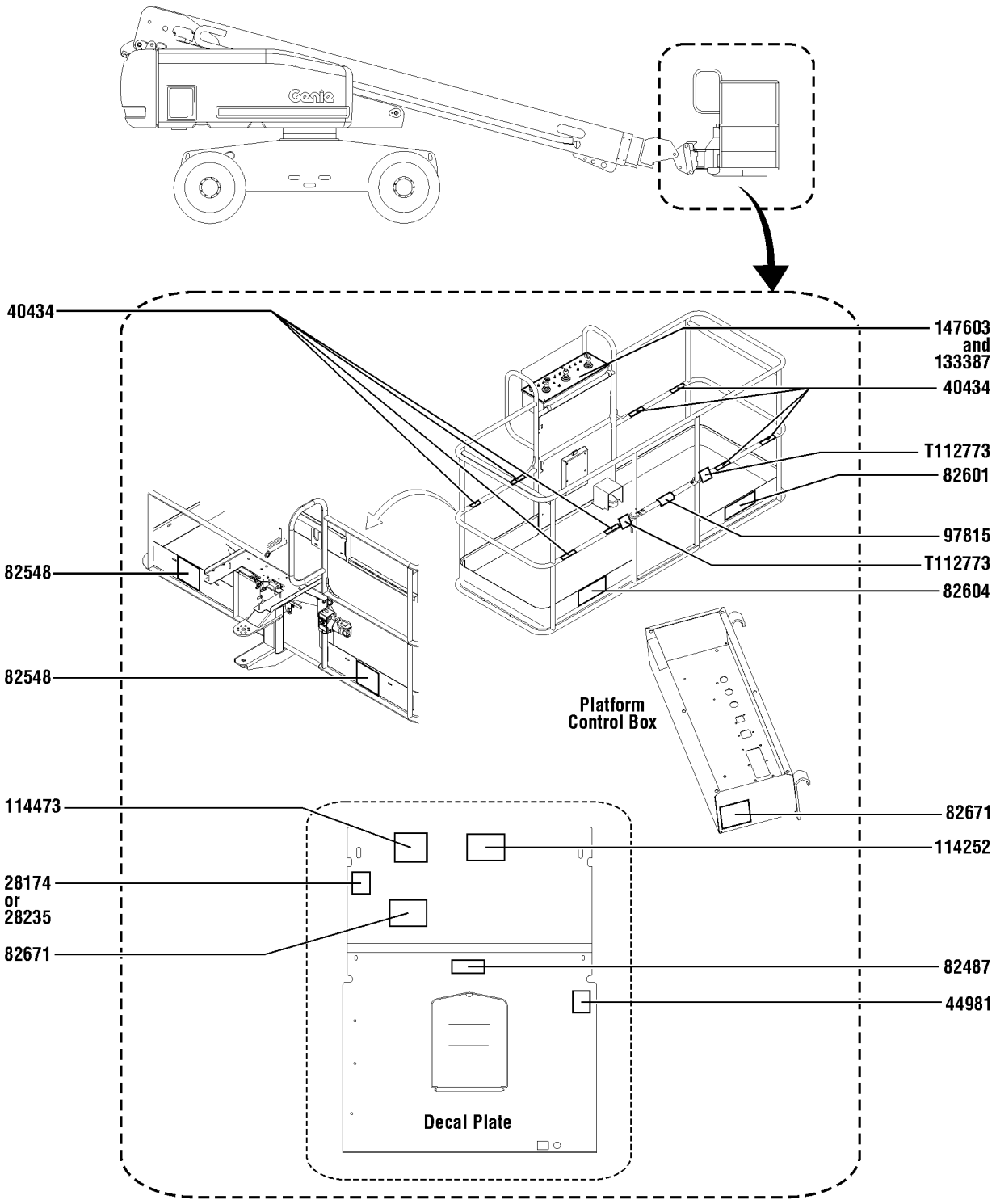

108.1 S-60 Decals with Symbol, Platform (CE)

Item	*Part No.*	*Description*	*Qty.*
A	1296264GT	DECAL KIT,S60/65 PLAT SYM,ANSI/CE platform kit	
1	28174GT	DECAL,POWER TO PLATFORM 230V	1
2	28235GT	DECAL,POWER TO PLATFORM 115V	1
3	40434GT	DECAL,LANYARD ANCHORAGE POINT	8
4	44981GT	DECAL,LABEL,AIRLINE 110 PSI Option, airline to plat	1
5	82487GT	DECAL,SYMBOL-READ THE MANUAL	1
6	82548GT	DECAL,WARN,CRUSH HAZARD PLAT	2
7	82601GT	DECAL,LABEL,MAX CAPACITY***	1
8	82604GT	DECAL,DANGER,SIDE FRC 400N	1
9	82671GT	DECAL,LABEL,WELD LINE INST,SYM Option, weld cable line	2
10	97815GT	DECAL,LABEL,LOWER MIDRAIL	1
11	114252GT	DECAL,LABEL,TIP OVER LMT SWTCH	1
12	114473GT	DECAL,DANGER,TIPOVER,TILT,SYM	1
13	133387GT	DECAL,DRIVE ENABLE PATCH	1
14	147603GT	DECAL, PLAT CNTL PNL	1
15	T112773GT	TAPE, PROTECTIVE MASK	2

109.1 S-65 Decals with Word, Hydraulic Tank Side (ANSI & Australia)

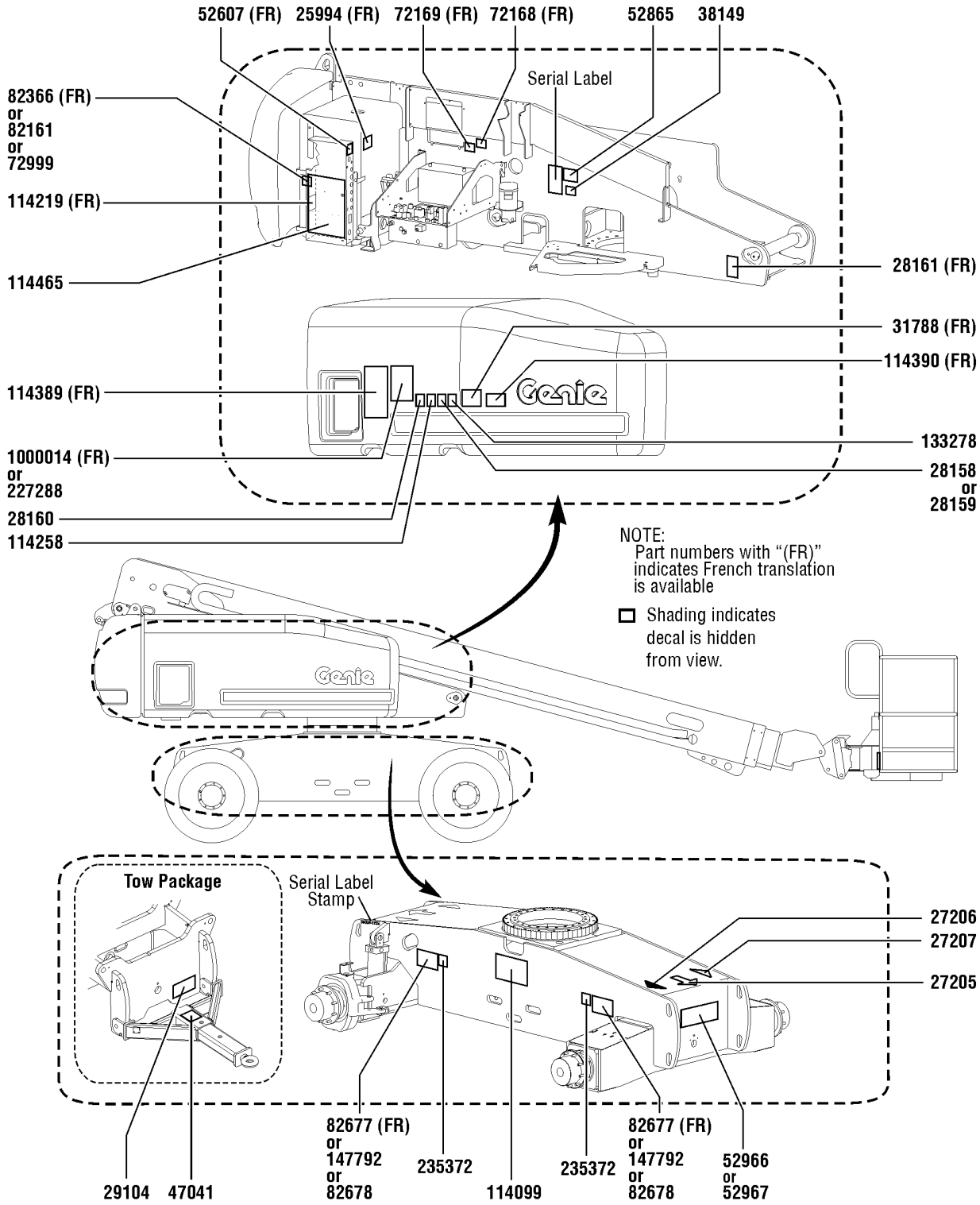

109.1 S-65 Decals with Word, Hydraulic Tank Side (ANSI & Australia)

Item	Part No.	Description	Qty.
1	25994GT	DECAL,NOTICE,SHUTOFF VALVES	1
2	27205GT	DECAL,ARROW YELLOW LRG 9"	1
3	27206GT	DECAL,TRIANGLE,BLUE	1
4	27207GT	DECAL,TRIANGLE,YELLOW	1
5	28158GT	DECAL,LABEL,UNLEADED GAS ONLY	1
6	28159GT	DECAL,DIESEL	1
7	28160GT	DECAL,LABEL,LIQUID PROPANE Option, LPG tank	1
8	28161GT	DECAL,WARN,CRUSH HAZARD HAND	1
9	29104GT	DECAL,TOWING INSTRUCTIONS Option, tow package	1
10	31788GT	DECAL,DANGER,BATTERY SAFETY***	1
11	38149GT	DECAL,LABEL,PATENTS US only	1
12	47041GT	DECAL,CAUTION,TOWING SPEED Option, tow package	1
13	52607GT	DECAL,LABEL,TEST*** Ford only	1
14	52865GT	DECAL,ANNUAL INSP*** ANSI only	1
15	52966GT	DECAL,COSMETIC,4 X 2	1
16	52967GT	DECAL,COSMETIC,4 X 4	1
17	72168GT	DECAL,LABEL,STARTER BATTERY	1
18	72169GT	DECAL,LABEL,CONTROLS BATTERY	1
19	72999GT	DECAL,LABEL,PETRO CANADA***	1
20	82161GT	DECAL,LABEL,UCON HYDROLUBE	1
21	82366GT	DECAL,CHEVRON RANDO HD	1
22	82677GT	DECAL,DANGER/LABEL,TIRE SPECS ANSI only	2
23	82678GT	DECAL,DANGER,HI-FLOAT TIRE Option, Hi-floatation	2
24	114099GT	DECAL,LABEL,TRANSPORT DIAGRAM	1
25	114219GT	DECAL,LABEL,RELAYS,S60&65	1
26	114258GT	DECAL,DANGER,NO SMOKING	1
27	114389GT	DECAL,DANGER,GENERAL SAFETY	1
28	114390GT	DECAL,DANGER,ELECT HAZARD***	1

109.1 S-65 Decals with Word, Hydraulic Tank Side (ANSI & Australia)

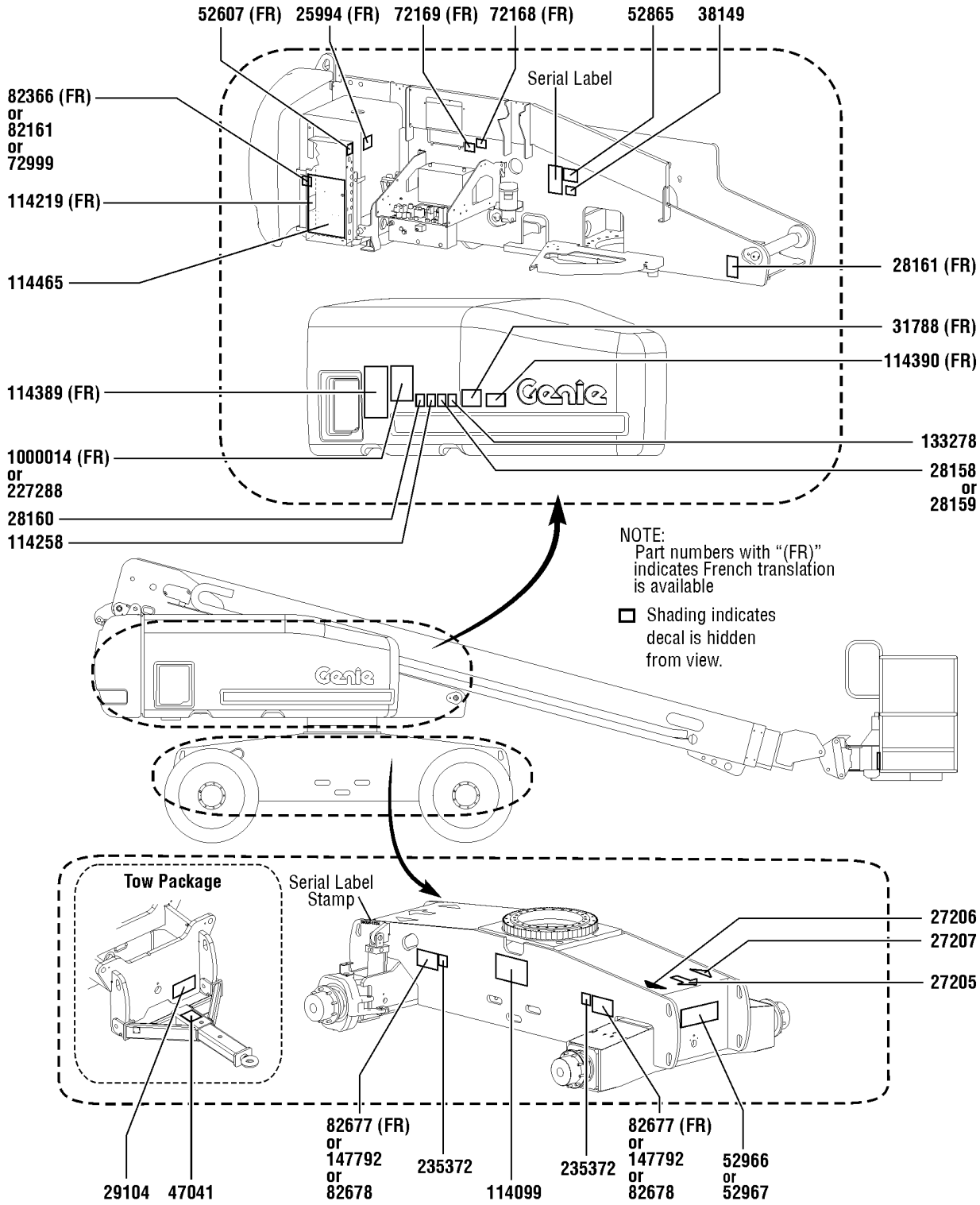

109.1 S-65 Decals with Word, Hydraulic Tank Side (ANSI & Australia)

Item	*Part No.*	*Description*	*Qty.*
29	114465GT	DECAL GROUND CONTROL BOX	1
30	133278GT	DECAL,LOW/ULTRA LOW SULFR FUEL Diesel models only	1
31	147792GT	DANGER,TIPOVR,TIRES FF ONLY AUS only	2
32	227288GT	DECAL, OPERATING INSTRUCTIONS AUS only	1
33	235372GT	DECAL,LABEL,WHEEL LOAD S65	2
34	1000014GT	DECAL,NOTICE,OPER INST.S60 ANSI only	1

110.1 S-65 Decals with Word, Engine Side (ANSI & Australia)

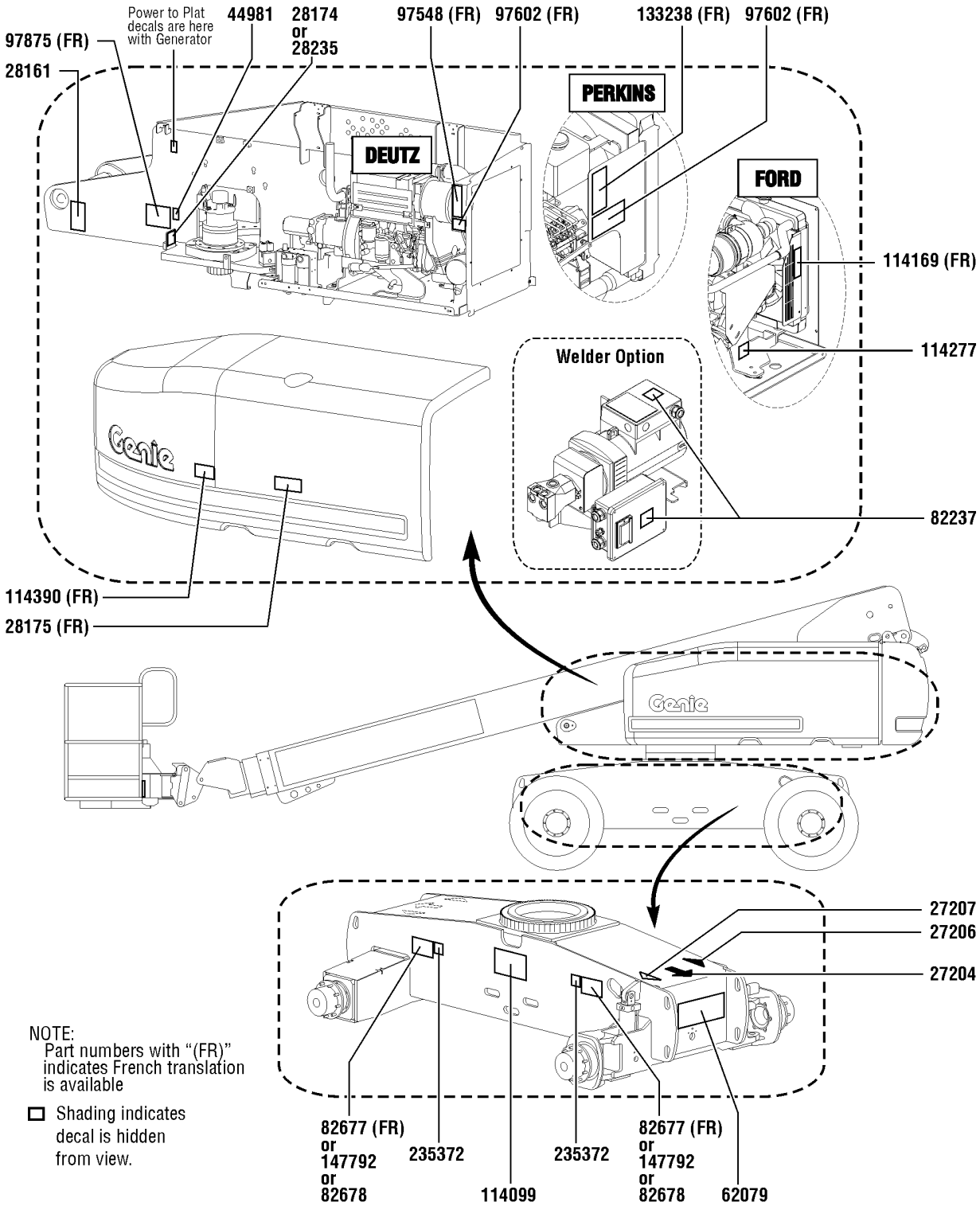

110.1 S-65 Decals with Word, Engine Side (ANSI & Australia)

Item	Part No.	Description	Qty.
1	27204GT	DECAL,ARROW BLUE	1
2	27206GT	DECAL,TRIANGLE,BLUE	1
3	27207GT	DECAL,TRIANGLE,YELLOW	1
4	28161GT	DECAL,WARN,CRUSH HAZARD HAND	1
5	28174GT	DECAL,POWER TO PLATFORM 230V	1
6	28175GT	DECAL,WARNING-COMPART ACCESS	1
7	28235GT	DECAL,POWER TO PLATFORM 115V	1
8	44981GT	DECAL,LABEL,AIRLINE 110 PSI Option, airline to plat	1
9	62079GT	DECAL,COSMETIC,S65	1
10	82237GT	DECAL,DANGER,HIGH VOLTAGE Option, welder	2
11	82677GT	DECAL,DANGER/LABEL,TIRE SPECS ANSI only	2
12	82678GT	DECAL,DANGER,HI-FLOAT TIRE	2
13	97548GT	DECAL,ENGINE SPEC,DEUTZ 2011	1
14	97602GT	DECAL,EXPLOSION HAZARD	1
15	97875GT	DECAL,WARN.WELD LINE INST.WORD Option, weld cable line	1
16	114099GT	DECAL,LABEL,TRANSPORT DIAGRAM	1
17	114169GT	DECAL,FORD ENGINE SPEC DSG423	1
18	114277GT	DECAL,LABEL,BELT ROUTING DSG	1
19	114390GT	DECAL,DANGER,ELECT HAZARD***	1
20	133238GT	DECAL,ENGINE SPEC,PERKINS***	1
21	147792GT	DANGER,TIPOVR,TIRES FF ONLY AUS only	2
22	235372GT	DECAL,LABEL,WHEEL LOAD S65	2

111.1 S-65 Decals with Word, Boom (ANSI & Australia)

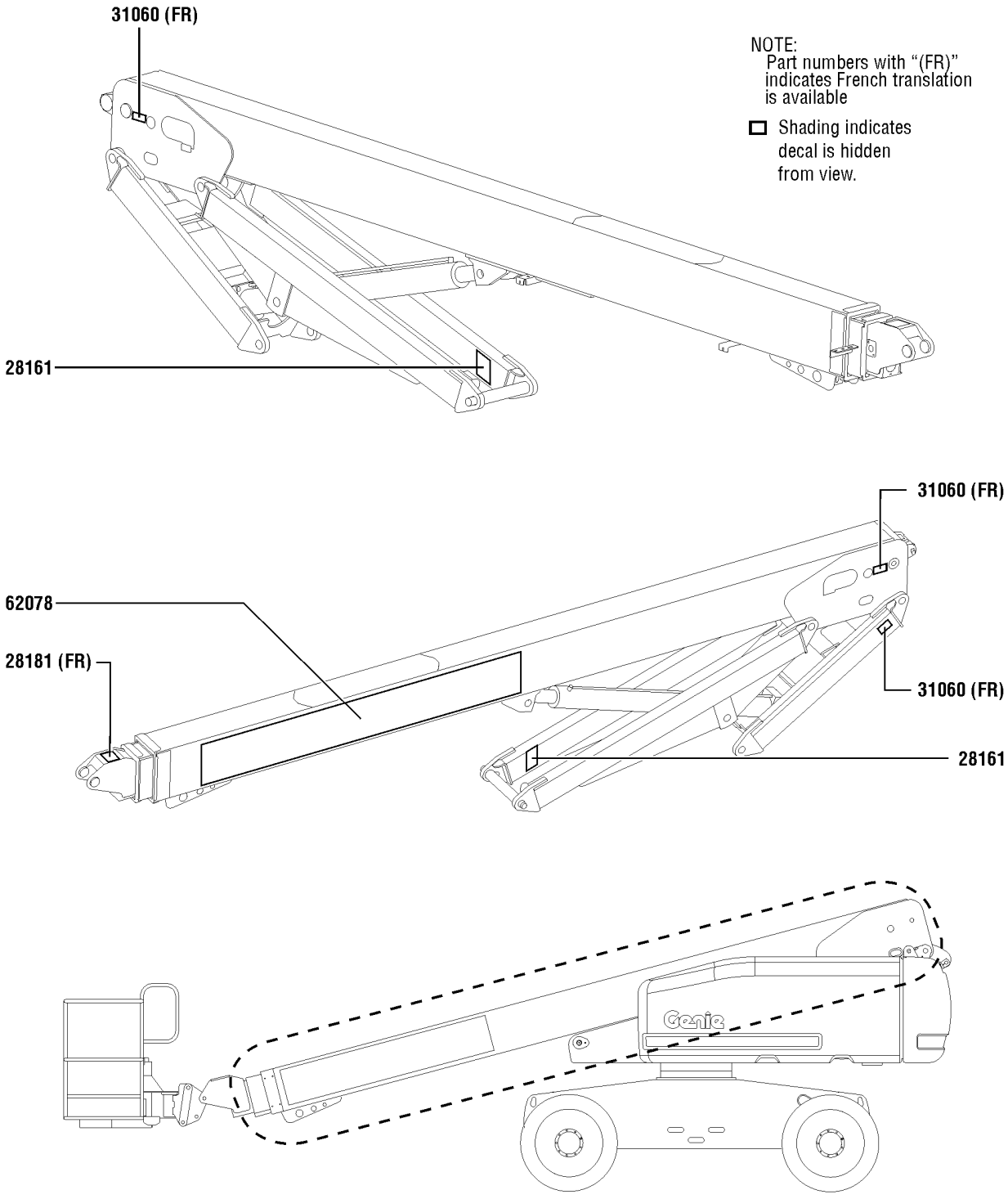

111.1 S-65 Decals with Word, Boom (ANSI & Australia)

Item	*Part No.*	*Description*	*Qty.*
1	28161GT	DECAL,WARN,CRUSH HAZARD HAND	2
2	28181GT	DECAL,WARN,FALL HAZARD	1
3	31060GT	DECAL,DANGER DO NOT ALTER SWTC	3
4	62078GT	DECAL,COSMETIC,GENIE S65	1

112.1 S-65 Decals with Word, Platform (ANSI & Australia)

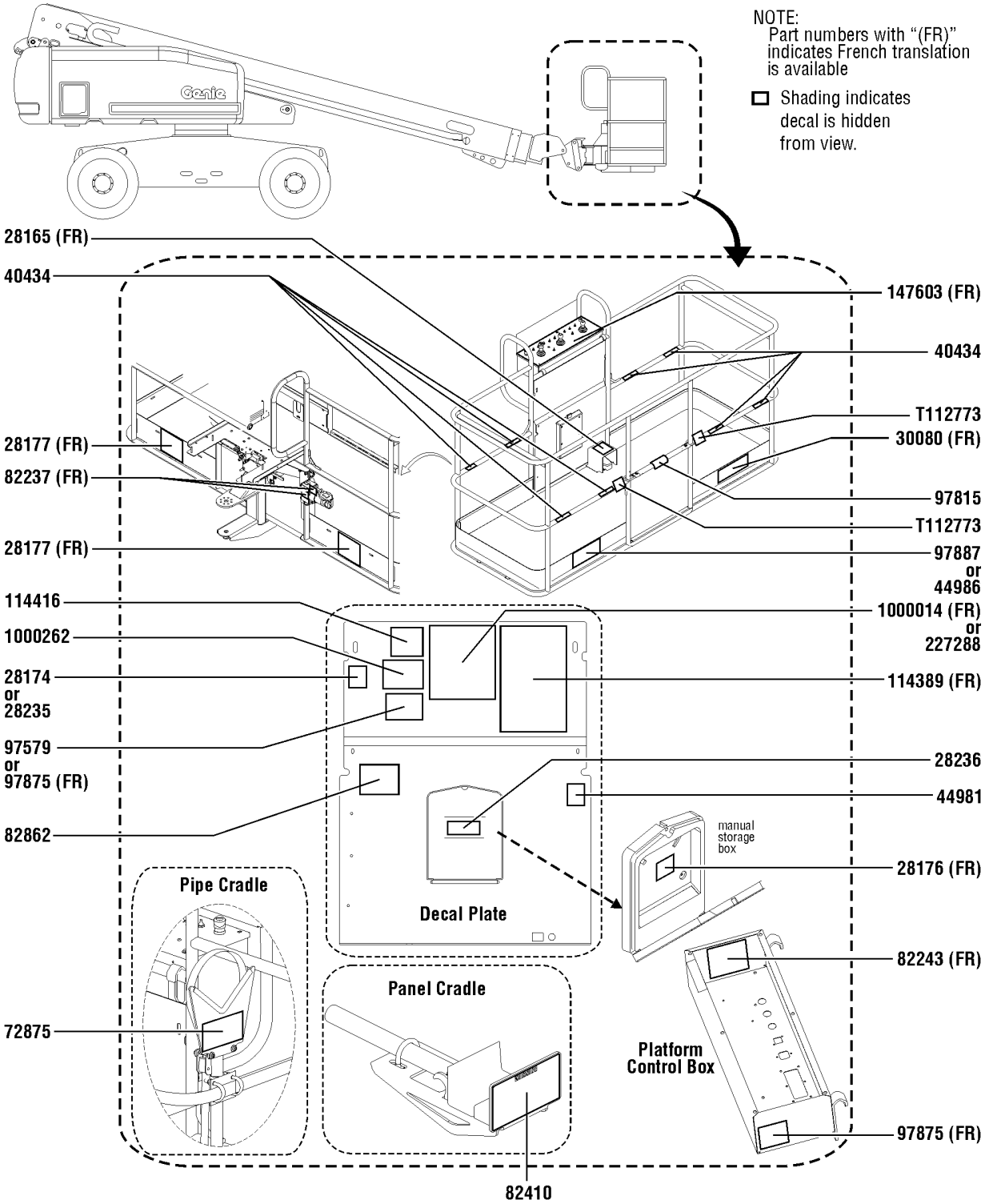

112.1 S-65 Decals with Word, Platform (ANSI & Australia)

Item	Part No.	Description	Qty.
A	1251643GT	DECAL KIT,PLAT,S60/65 WRD,ANSI/AUS platform kit	
1	28165GT	DECAL,INSTRUCT,FOOTSWITCH OPER	1
2	28174GT	DECAL,POWER TO PLATFORM 230V	1
3	28176GT	DECAL,LABEL,MANUAL NOT HERE	1
4	28177GT	DECAL,WARN,CRUSH HAZARD PLAT	2
5	28235GT	DECAL,POWER TO PLATFORM 115V	1
6	28236GT	DECAL,WARN,IMPROPER OPERATION	1
7	30080GT	DECAL,NOTICE,MAX LOAD 500 LBS	1
8	40434GT	DECAL,LANYARD ANCHORAGE POINT	8
9	44981GT	DECAL,LABEL,AIRLINE 110 PSI Option, airline to plat	1
10	44986GT	DECAL,INSTR,SIDE FRC/WIND,AUS AUS only	1
11	72875GT	DECAL,WARNING,PIPE CRADLE,BOOM Option, pipe cradle	2
12	82237GT	DECAL,DANGER,HIGH VOLTAGE Option, welder	2
13	82243GT	DECAL FAULT CODE	1
14	82410GT	DECAL,WARNING,PANEL CRADLE Option, panel cradle	2
15	82862GT	DECAL,FIRE EXTINGUISHER Option, welder	1
16	97579GT	DECAL,DANGER,TIP-OVER,WELDER** Option, welder	1
17	97815GT	DECAL,LABEL,LOWER MIDRAIL	1
18	97875GT	DECAL,WARN.WELD LINE INST.WORD Option, weld cable line	2
19	97887GT	DECAL,INSTR,MAX SIDE FRC,ANSI ANSI/CSA only	1
20	114389GT	DECAL,DANGER,GENERAL SAFETY	1
21	114416GT	DECAL,DANGER,TIPOVER,TILT	1
22	147603GT	DECAL, PLAT CNTL PNL	1
23	227288GT	DECAL, OPERATING INSTRUCTIONS AUS only	1
24	1000014GT	DECAL,NOTICE,OPER INST.S60 ANSI only	1
25	1000262GT	DECAL,DANGER,TIP OVER,PLAT	1
26	T112773GT	TAPE, PROTECTIVE MASK	2

113.1 S-65 Decals with Symbol, Hydraulic Tank Side (ANSI & CE)

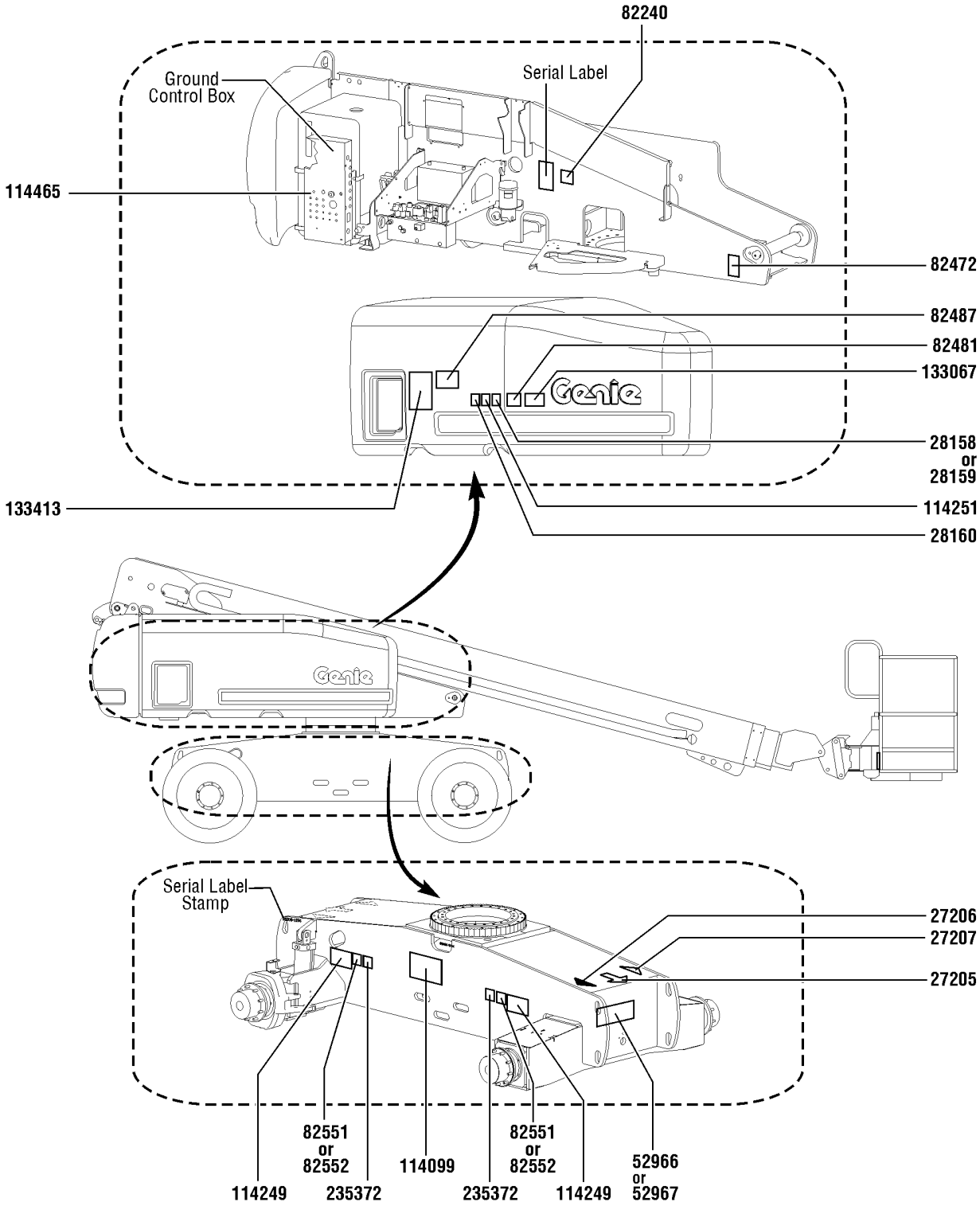

113.1 S-65 Decals with Symbol, Hydraulic Tank Side (ANSI & CE)

Item	Part No.	Description	Qty.
1	27205GT	DECAL,ARROW YELLOW LRG 9"	1
2	27206GT	DECAL,TRIANGLE,BLUE	1
3	27207GT	DECAL,TRIANGLE,YELLOW	1
4	28158GT	DECAL,LABEL,UNLEADED GAS ONLY	1
5	28159GT	DECAL,DIESEL	1
6	28160GT	DECAL,LABEL,LIQUID PROPANE Option, LPG tank	1
7	52966GT	DECAL,COSMETIC,4 X 2	1
8	52967GT	DECAL,COSMETIC,4 X 4	1
9	82240GT	DECAL,LABEL,105 DB	1
10	82472GT	DECAL,WARNING,CRUSHING HAZARD	1
11	82481GT	DECAL,SYMBOL-BATTERY SAFETY	1
12	82487GT	DECAL,SYMBOL-READ THE MANUAL	1
13	82551GT	DECAL,LABEL,TIRE PRESSURE	2
14	82552GT	DECAL,LABEL,TIRE PRESS HF Option, hi-floatation tires	2
15	114099GT	DECAL,LABEL,TRANSPORT DIAGRAM	1
16	114249GT	DECAL,LABEL,TIPOVER,TIRES,SYMB	2
17	114251GT	DECAL,LABEL,NO SMOKING,SYMB	1
18	114465GT	DECAL GROUND CONTROL BOX	1
19	133067GT	DECAL,DANGER,ELEC.HAZ.STAY CLR	1
20	133413GT	DECAL,EMERGENCY LOWERING CE only	1
21	235372GT	DECAL,LABEL,WHEEL LOAD S65	2

114.1 S-65 Decals with Symbol, Engine Side (ANSI & CE)

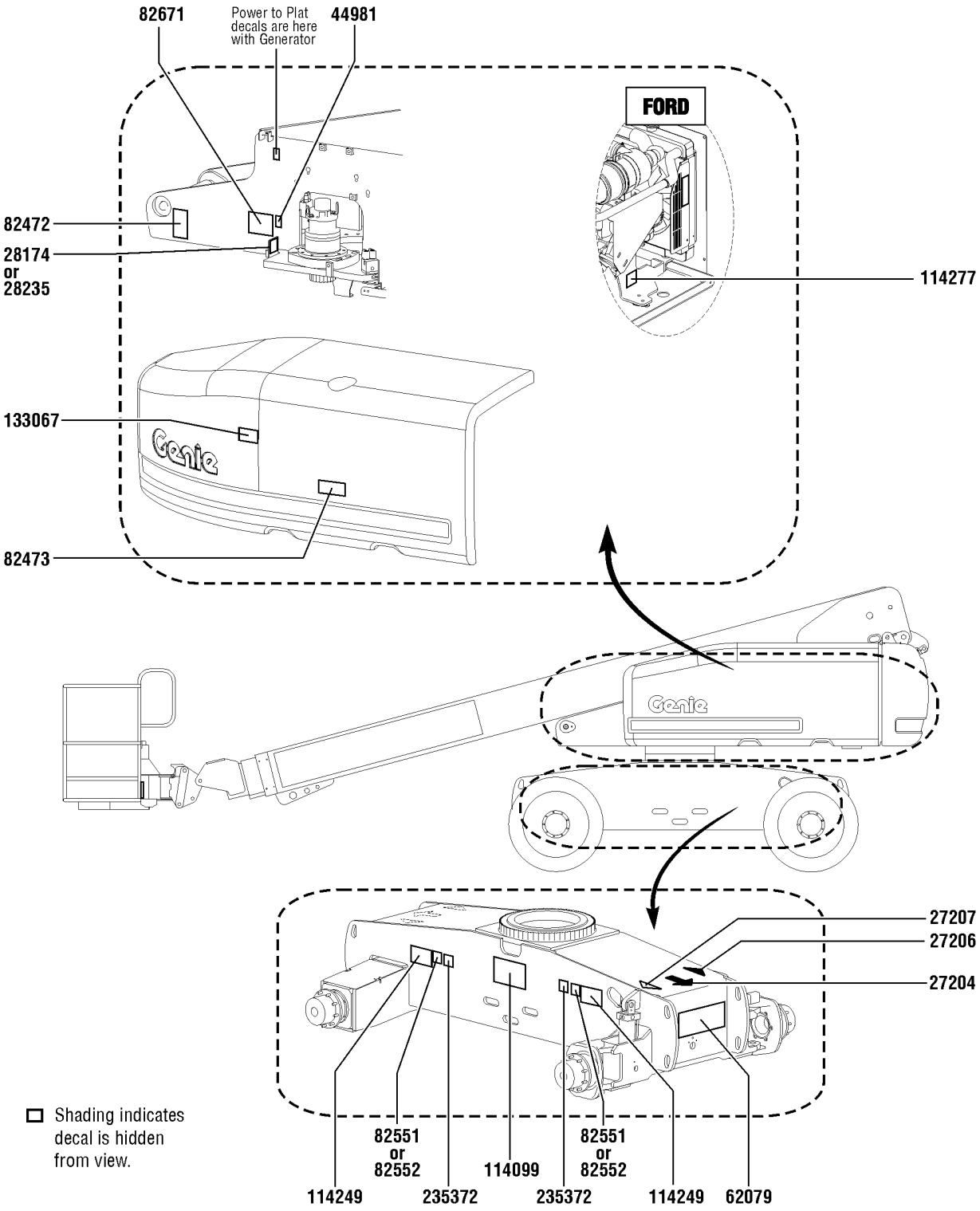

114.1 S-65 Decals with Symbol, Engine Side (ANSI & CE)

Item	*Part No.*	*Description*	*Qty.*
1	27204GT	DECAL,ARROW BLUE	1
2	27206GT	DECAL,TRIANGLE,BLUE	1
3	27207GT	DECAL,TRIANGLE,YELLOW	1
4	28174GT	DECAL,POWER TO PLATFORM 230V	1
5	28235GT	DECAL,POWER TO PLATFORM 115V	1
6	44981GT	DECAL,LABEL,AIRLINE 110 PSI Option, airline to plat	1
7	62079GT	DECAL,COSMETIC,S65	1
8	82472GT	DECAL,WARNING,CRUSHING HAZARD	1
9	82473GT	DECAL,SYMBOL-COMP ACCESS	1
10	82551GT	DECAL,LABEL,TIRE PRESSURE	2
11	82552GT	DECAL,LABEL,TIRE PRESS HF Option, hi-floatation tires	2
12	82671GT	DECAL,LABEL,WELD LINE INST,SYM	1
13	114099GT	DECAL,LABEL,TRANSPORT DIAGRAM	1
14	114249GT	DECAL,LABEL,TIPOVER,TIRES,SYMB	2
15	114277GT	DECAL,LABEL,BELT ROUTING DSG	1
16	133067GT	DECAL,DANGER,ELEC.HAZ.STAY CLR	1
17	235372GT	DECAL,LABEL,WHEEL LOAD S65	2

115.1 S-65 Decals with Symbol, Boom (ANSI & CE)

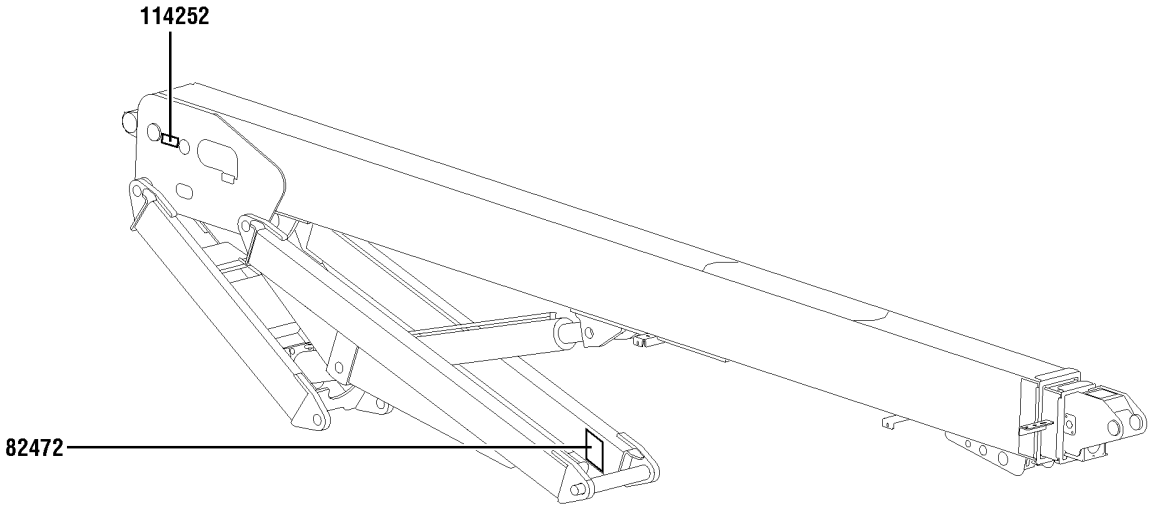

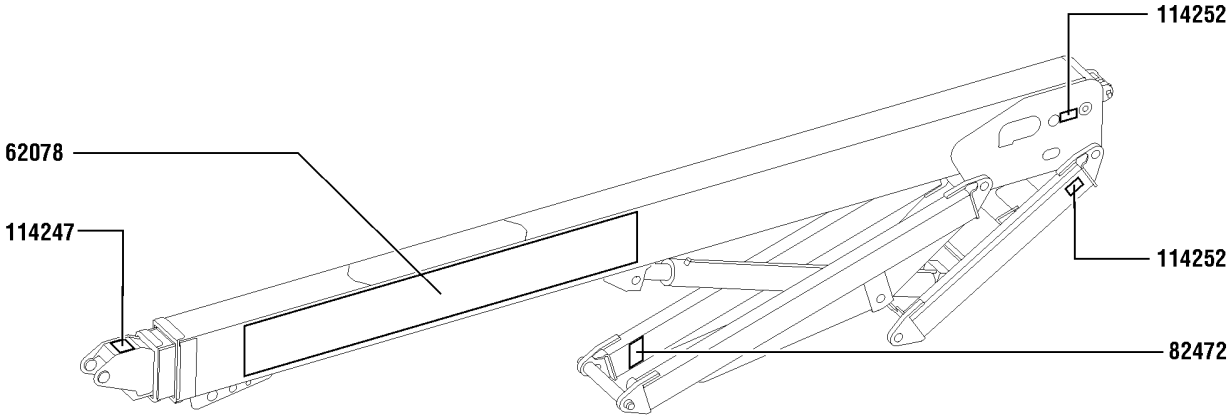

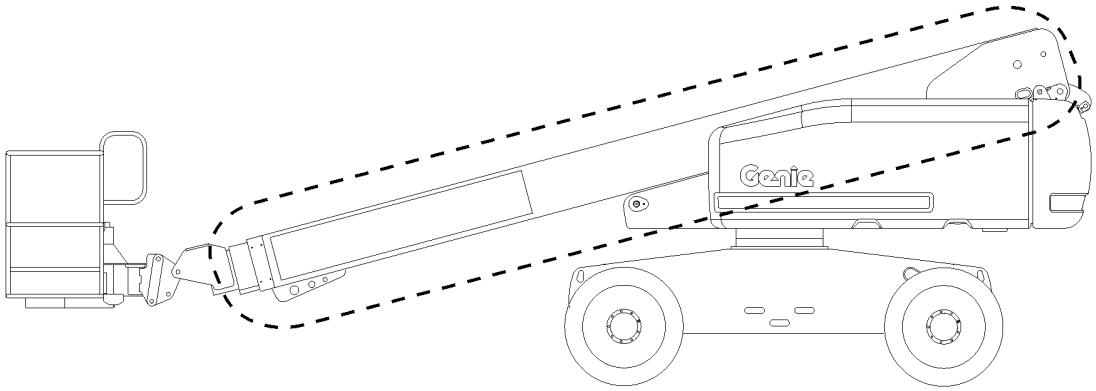

115.1 S-65 Decals with Symbol, Boom (ANSI & CE)

Item	*Part No.*	*Description*	*Qty.*
1	62078GT	DECAL,COSMETIC,GENIE S65	1
2	82472GT	DECAL,WARNING,CRUSHING HAZARD	2
3	114247GT	DECAL,LABEL,FALL HAZARD***	1
4	114252GT	DECAL,LABEL,TIP OVER LMT SWTCH	3

116.1 S-65 Decals with Symbol, Platform (ANSI & CE)

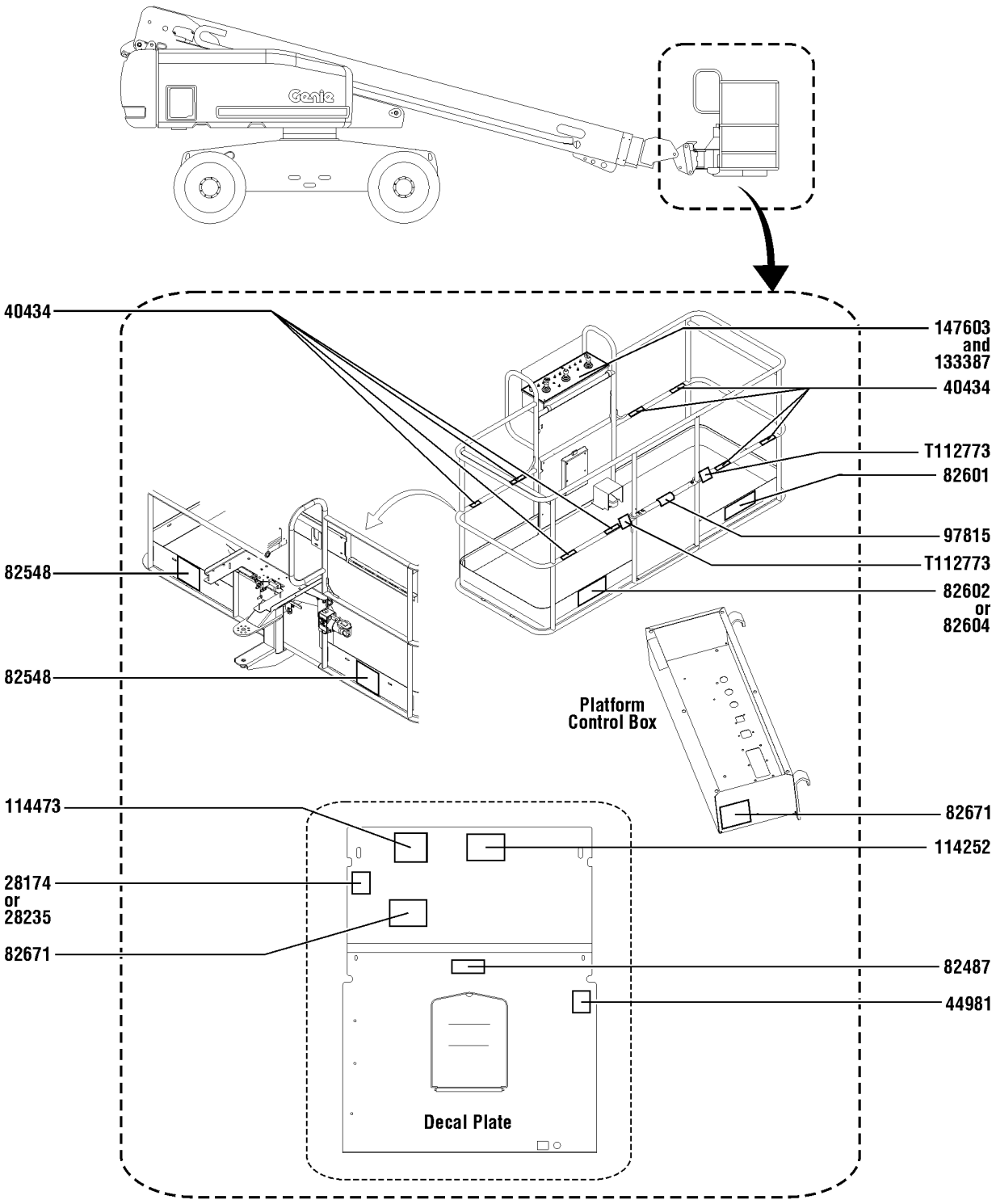

116.1 S-65 Decals with Symbol, Platform (ANSI & CE)

Item	*Part No.*	*Description*	*Qty.*
A	1296264GT	DECAL KIT,S60/65 PLAT SYM,ANSI/CE platform kit	
1	28174GT	DECAL,POWER TO PLATFORM 230V	1
2	28235GT	DECAL,POWER TO PLATFORM 115V	1
3	40434GT	DECAL,LANYARD ANCHORAGE POINT	8
4	44981GT	DECAL,LABEL,AIRLINE 110 PSI Option, airline to plat	1
5	82487GT	DECAL,SYMBOL-READ THE MANUAL	1
6	82548GT	DECAL,WARN,CRUSH HAZARD PLAT	2
7	82601GT	DECAL,LABEL,MAX CAPACITY***	1
8	82602GT	DECAL,DANGER,MAX SIDE FRC,667N ANSI only	1
9	82604GT	DECAL,DANGER,SIDE FRC 400N CE only	1
10	82671GT	DECAL,LABEL,WELD LINE INST,SYM Option, weld cable line	2
11	97815GT	DECAL,LABEL,LOWER MIDRAIL	1
12	114252GT	DECAL,LABEL,TIP OVER LMT SWTCH	1
13	114473GT	DECAL,DANGER,TIPOVER,TILT,SYM	1
14	133387GT	DECAL,DRIVE ENABLE PATCH	1
15	147603GT	DECAL, PLAT CNTL PNL	1
16	T112773GT	TAPE, PROTECTIVE MASK	2

117.1 S-60X Decals with Word, Hydraulic Tank Side (ANSI)

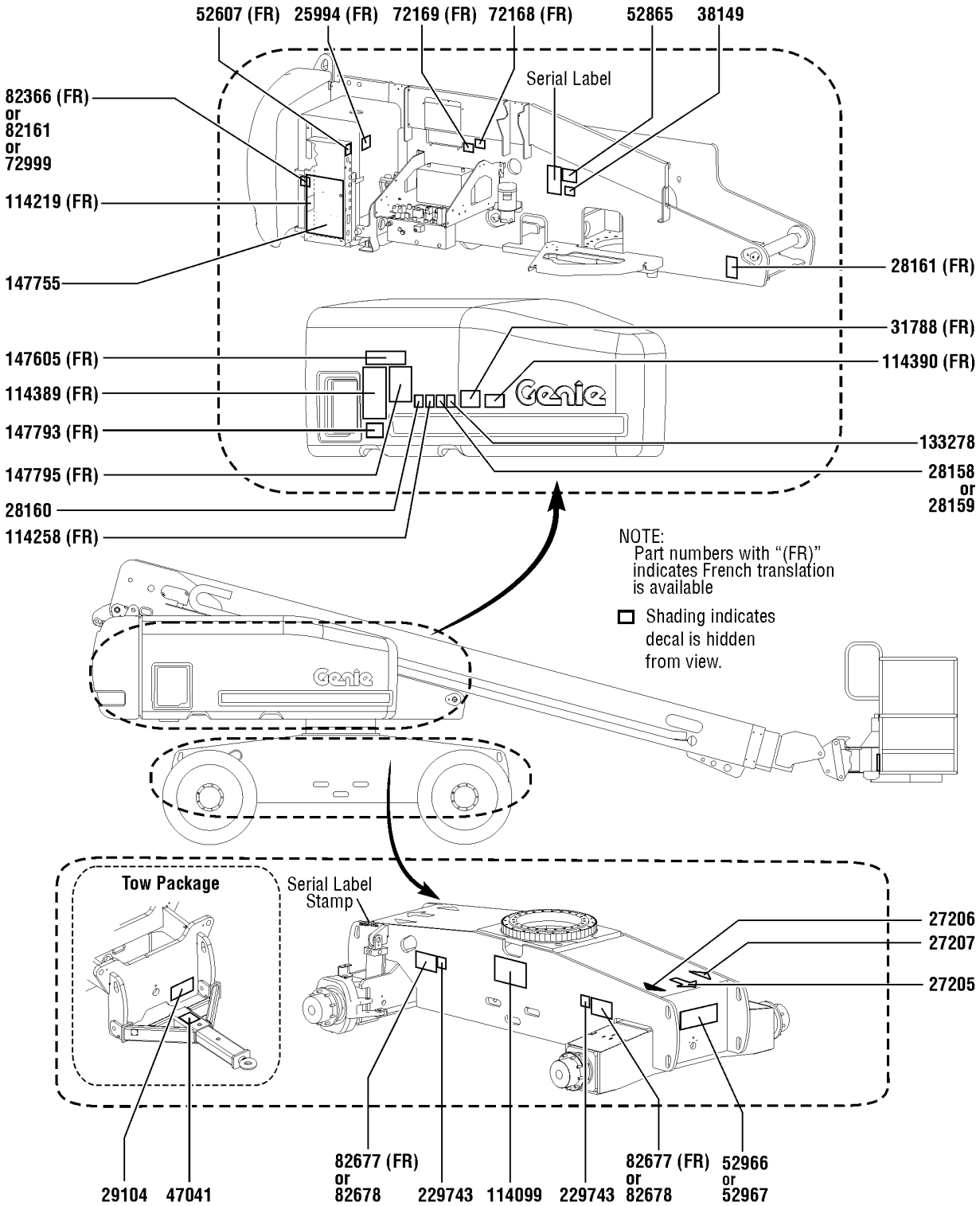

117.1 S-60X Decals with Word, Hydraulic Tank Side (ANSI)

Item	Part No.	Description	Qty.
	162023GT	DECAL KIT,S60X,COMP,WRD,ANSI S-60X from SN 21001	
1	25994GT	DECAL,NOTICE,SHUTOFF VALVES	1
2	27205GT	DECAL,ARROW YELLOW LRG 9"	1
3	27206GT	DECAL,TRIANGLE,BLUE	1
4	27207GT	DECAL,TRIANGLE,YELLOW	1
5	28158GT	DECAL,LABEL,UNLEADED GAS ONLY	1
6	28159GT	DECAL,DIESEL	1
7	28160GT	DECAL,LABEL,LIQUID PROPANE Option, LPG tank	1
8	28161GT	DECAL,WARN,CRUSH HAZARD HAND	1
9	29104GT	DECAL,TOWING INSTRUCTIONS Option, tow package	1
10	31788GT	DECAL,DANGER,BATTERY SAFETY***	1
11	38149GT	DECAL,LABEL,PATENTS	1
12	47041GT	DECAL,CAUTION,TOWING SPEED Option, tow package	1
13	52607GT	DECAL,LABEL,TEST*** Ford only	1
14	52865GT	DECAL,ANNUAL INSP***	1
15	52966GT	DECAL,COSMETIC,4 X 2	1
16	52967GT	DECAL,COSMETIC,4 X 4	1
17	72168GT	DECAL,LABEL,STARTER BATTERY	1
18	72169GT	DECAL,LABEL,CONTROLS BATTERY	1
19	72999GT	DECAL,LABEL,PETRO CANADA***	1
20	82161GT	DECAL,LABEL,UCON HYDROLUBE	1
21	82366GT	DECAL,CHEVRON RANDO HD	1
22	82677GT	DECAL,DANGER/LABEL,TIRE SPECS	2
23	82678GT	DECAL,DANGER,HI-FLOAT TIRE Option, hi-floatation tires	2
24	114099GT	DECAL,LABEL,TRANSPORT DIAGRAM	1
25	114219GT	DECAL,LABEL,RELAYS,S60&65	1
26	114258GT	DECAL,DANGER,NO SMOKING	1
27	114389GT	DECAL,DANGER,GENERAL SAFETY	1

117.1 S-60X Decals with Word, Hydraulic Tank Side (ANSI)

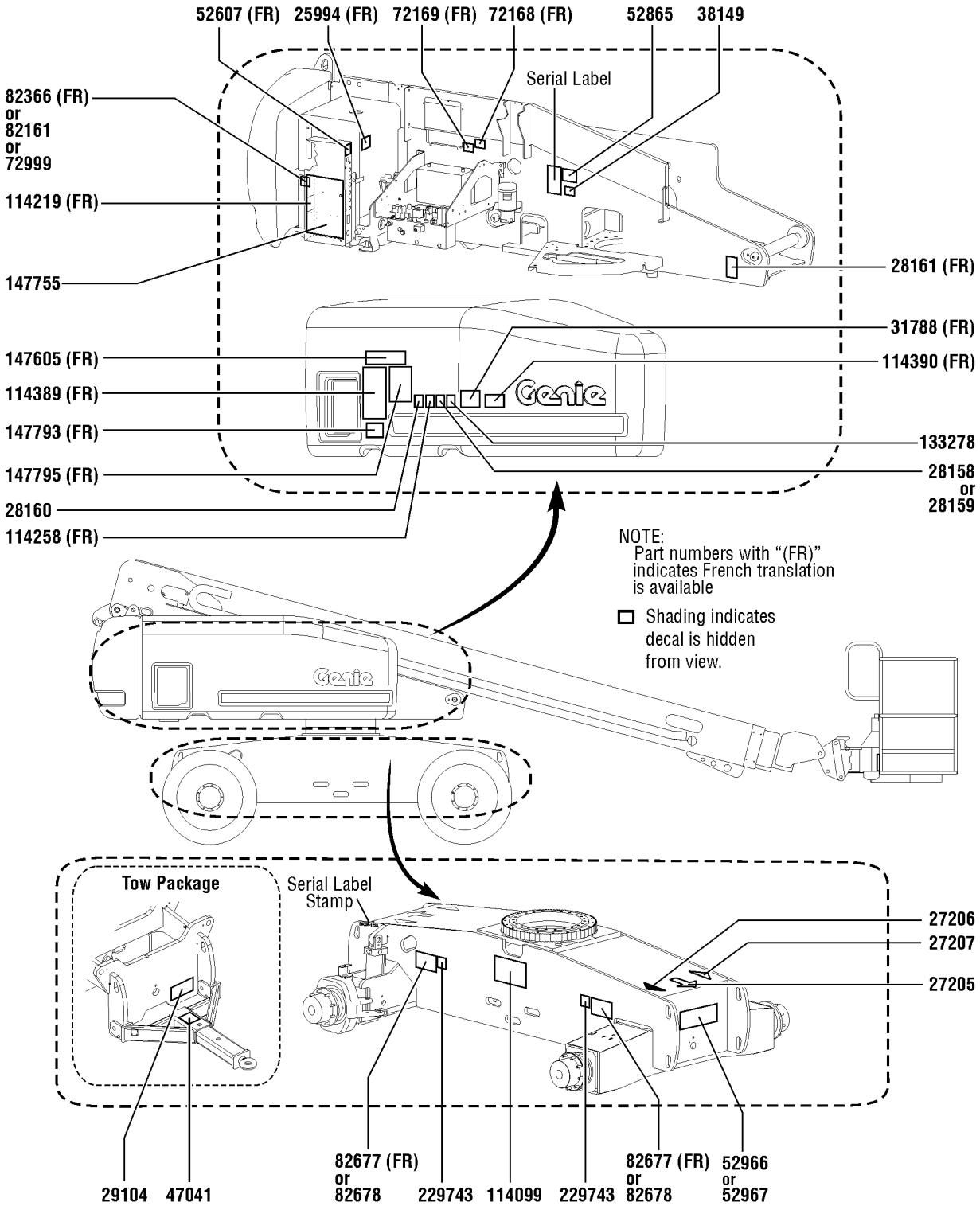

117.1 S-60X Decals with Word, Hydraulic Tank Side (ANSI)

Item	*Part No.*	*Description*	*Qty.*
28	114390GT	DECAL,DANGER,ELECT HAZARD***	1
29	133278GT	DECAL,LOW/ULTRA LOW SULFR FUEL Diesel models only	1
30	147605GT	DECAL,INST PLAT CAP 60X	1
31	147755GT	DECAL,GR CNTL PNL 60X 80X	1
32	147793GT	DECAL,DANGER,TIPOVR,MAX CAP	1
33	147795GT	DECAL, OPER INST 6080X GRD	1
34	229743GT	DECAL,LABEL,WHEEL LOAD S60/60X	2

118.1 S-60X Decals with Word, Engine Side (ANSI)

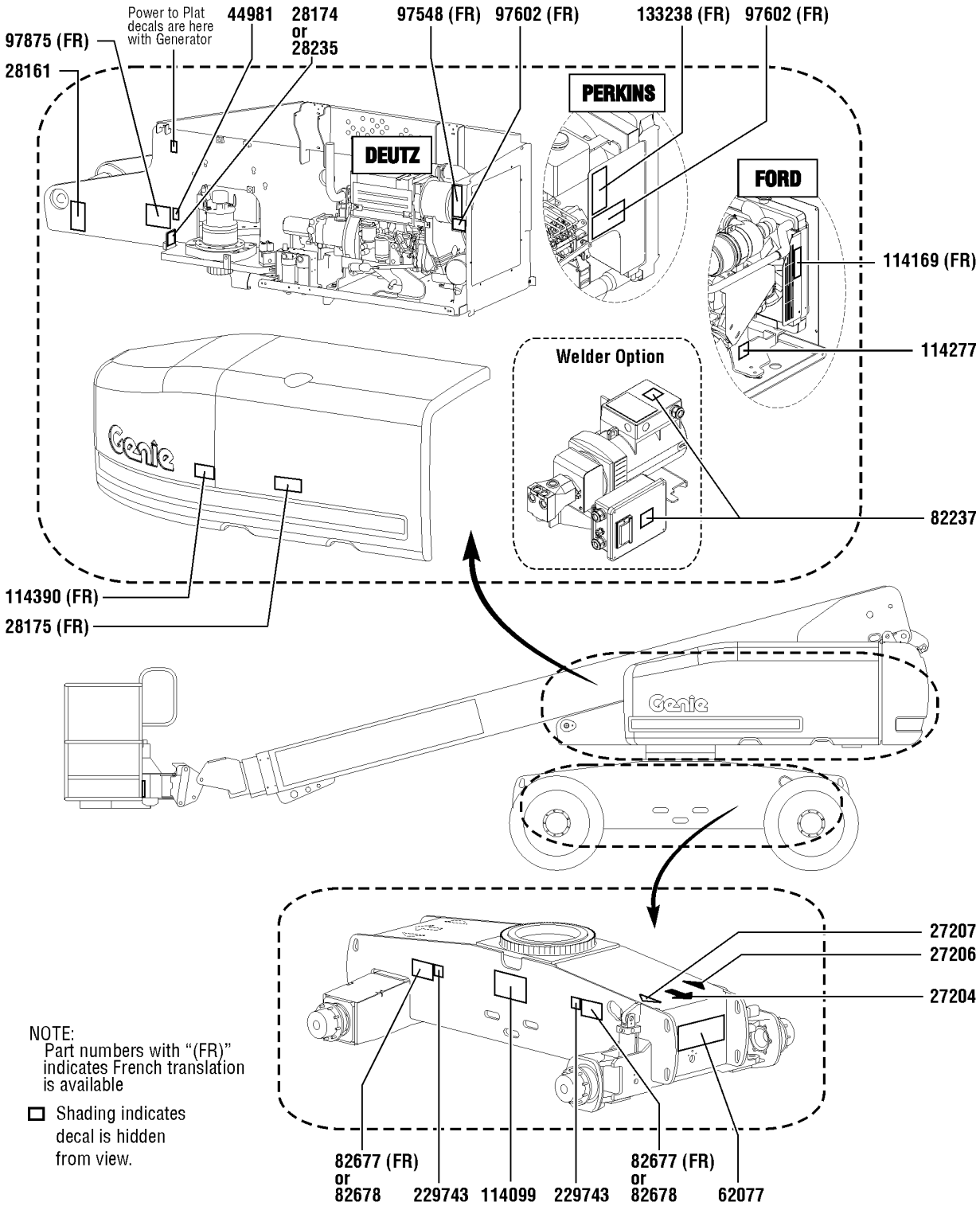

118.1 S-60X Decals with Word, Engine Side (ANSI)

Item	Part No.	Description	Qty.
1	27204GT	DECAL,ARROW BLUE	1
2	27206GT	DECAL,TRIANGLE,BLUE	1
3	27207GT	DECAL,TRIANGLE,YELLOW	1
4	28161GT	DECAL,WARN,CRUSH HAZARD HAND	1
5	28174GT	DECAL,POWER TO PLATFORM 230V	1
6	28175GT	DECAL,WARNING-COMPART ACCESS	1
7	28235GT	DECAL,POWER TO PLATFORM 115V	1
8	44981GT	DECAL,LABEL,AIRLINE 110 PSI Option, airline to plat	1
9	62077GT	DECAL,COSMETIC,S60	1
10	82237GT	DECAL,DANGER,HIGH VOLTAGE Option, welder	2
11	82677GT	DECAL,DANGER/LABEL,TIRE SPECS	2
12	82678GT	DECAL,DANGER,HI-FLOAT TIRE Option, hi-floatation tires	2
13	97548GT	DECAL,ENGINE SPEC,DEUTZ 2011	1
14	97602GT	DECAL,EXPLOSION HAZARD	1
15	97875GT	DECAL,WARN.WELD LINE INST.WORD Option, weld cable line	1
16	114099GT	DECAL,LABEL,TRANSPORT DIAGRAM	1
17	114169GT	DECAL,FORD ENGINE SPEC DSG423	1
18	114277GT	DECAL,LABEL,BELT ROUTING DSG	1
19	114390GT	DECAL,DANGER,ELECT HAZARD***	1
20	133238GT	DECAL,ENGINE SPEC,PERKINS***	1
21	229743GT	DECAL,LABEL,WHEEL LOAD S60/60X	2

119.1 S-60X Decals with Word, Boom (ANSI)

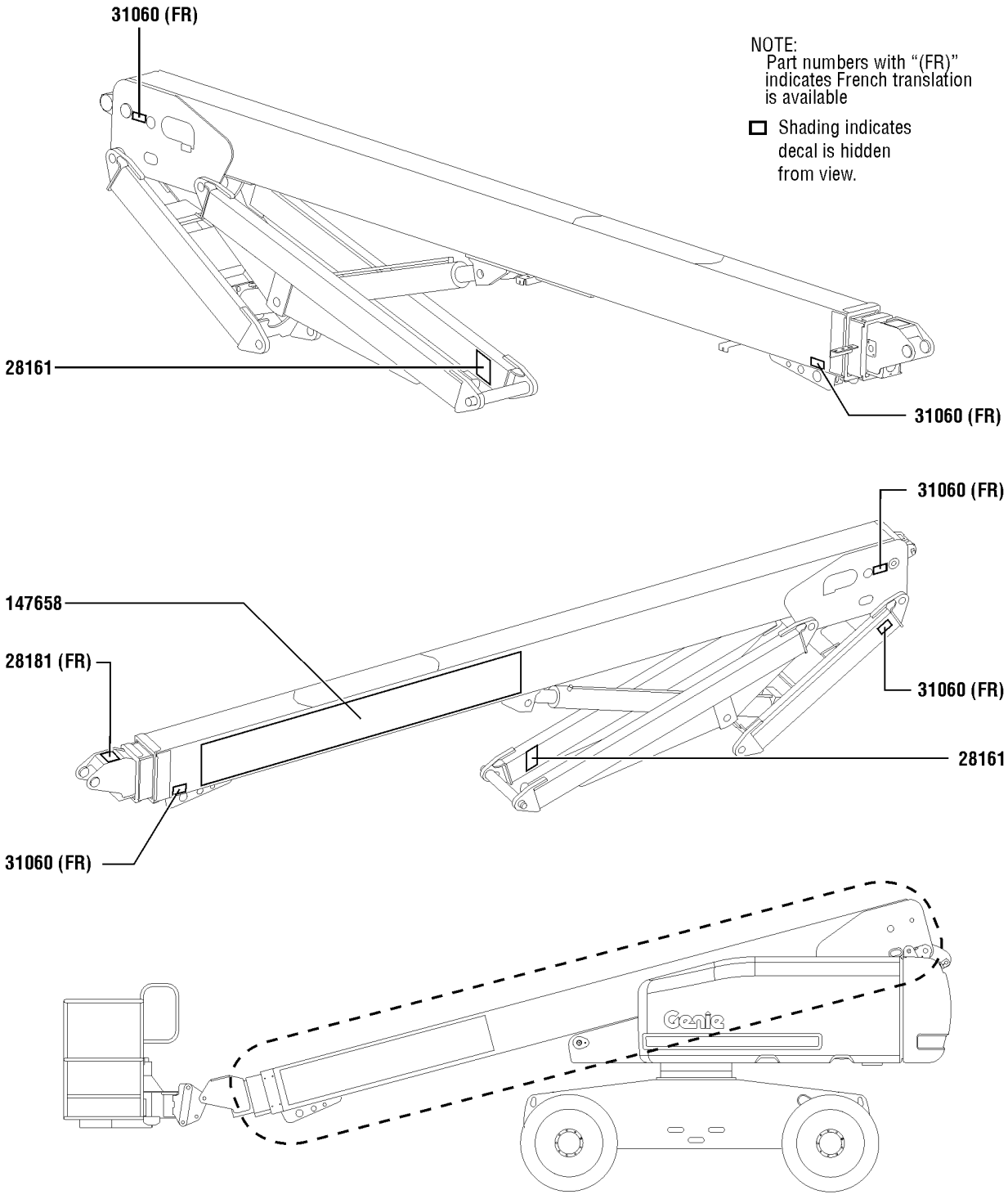

119.1 S-60X Decals with Word, Boom (ANSI)

Item	*Part No.*	*Description*	*Qty.*
1	28161GT	DECAL,WARN,CRUSH HAZARD HAND	2
2	28181GT	DECAL,WARN,FALL HAZARD	1
3	31060GT	DECAL,DANGER DO NOT ALTER SWTC	5
4	147658GT	DECAL,COSM GENIE S60X	1

120.1 S-60X Decals with Word, Platform (ANSI)

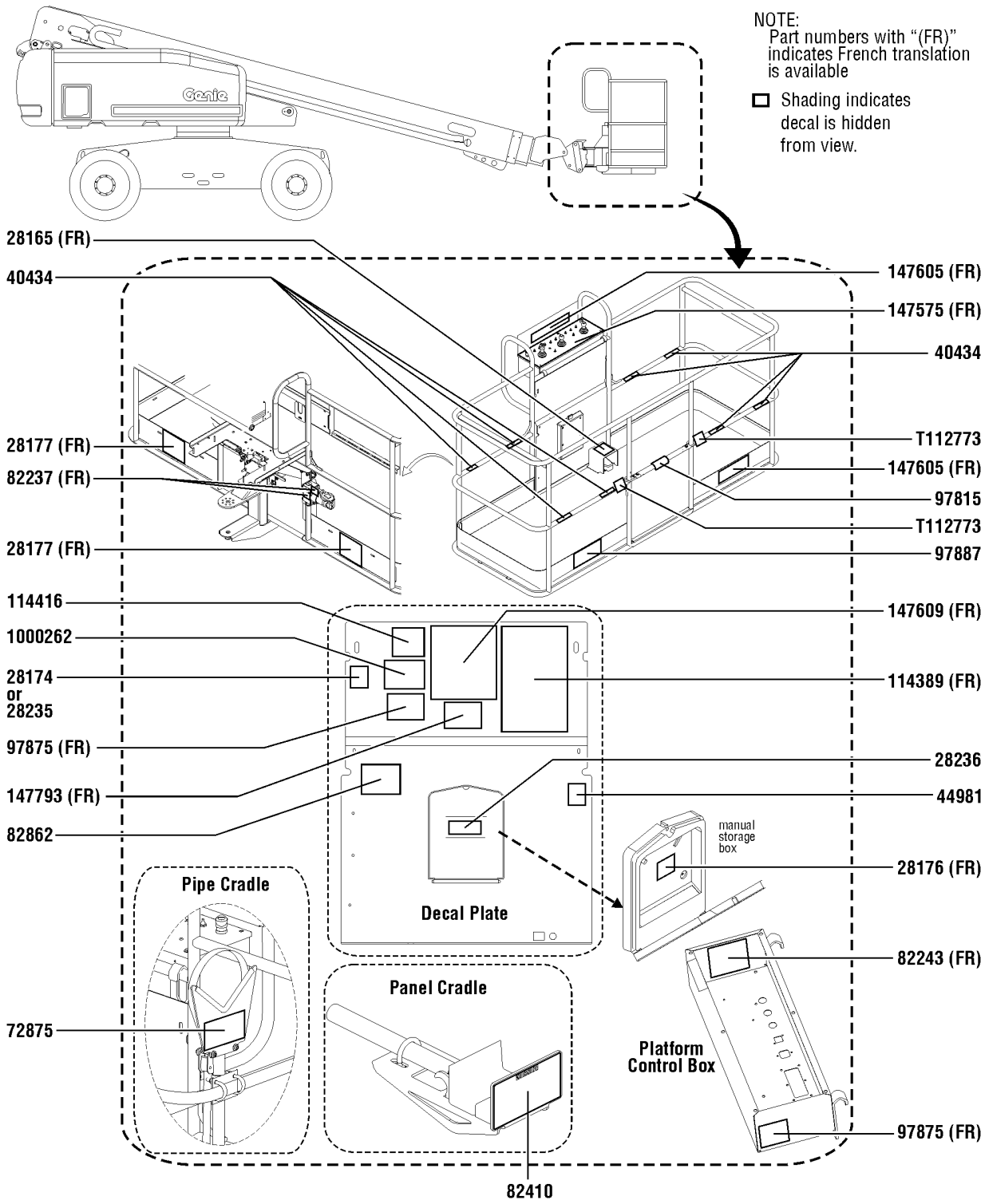

120.1 S-60X Decals with Word, Platform (ANSI)

Item	Part No.	Description	Qty.
A	1251643GT	DECAL KIT,PLAT,S60/65 WRD,ANSI/AUS platform kit	
1	28165GT	DECAL,INSTRUCT,FOOTSWITCH OPER	1
2	28174GT	DECAL,POWER TO PLATFORM 230V	1
3	28176GT	DECAL,LABEL,MANUAL NOT HERE	1
4	28177GT	DECAL,WARN,CRUSH HAZARD PLAT	2
5	28235GT	DECAL,POWER TO PLATFORM 115V	1
6	28236GT	DECAL,WARN,IMPROPER OPERATION	1
7	40434GT	DECAL,LANYARD ANCHORAGE POINT	8
8	44981GT	DECAL,LABEL,AIRLINE 110 PSI Option, airline to plat	1
9	72875GT	DECAL,WARNING,PIPE CRADLE,BOOM Option, pipe cradle	2
10	82237GT	DECAL,DANGER,HIGH VOLTAGE Option, welder	2
11	82243GT	DECAL FAULT CODE	1
12	82410GT	DECAL,WARNING,PANEL CRADLE Option, panel cradle	2
13	82862GT	DECAL,FIRE EXTINGUISHER Option, welder	1
14	97815GT	DECAL,LABEL,LOWER MIDRAIL	1
15	97875GT	DECAL,WARN.WELD LINE INST.WORD Option, weld cable line	2
16	97887GT	DECAL,INSTR,MAX SIDE FRC,ANSI	1
17	114389GT	DECAL,DANGER,GENERAL SAFETY	1
18	114416GT	DECAL,DANGER,TIPOVER,TILT	1
19	147575GT	DECAL, PLAT CNTL PNL 60X 80X	1
20	147605GT	DECAL,INST PLAT CAP 60X	2
21	147609GT	DECAL, INST, OPER INST 60X PLT	1
22	147793GT	DECAL,DANGER,TIPOVR,MAX CAP	1
23	1000262GT	DECAL,DANGER,TIP OVER,PLAT	1
24	T112773GT	TAPE, PROTECTIVE MASK	2

121.1 S-60X Decals with Symbol, Hydraulic Tank Side (ANSI)

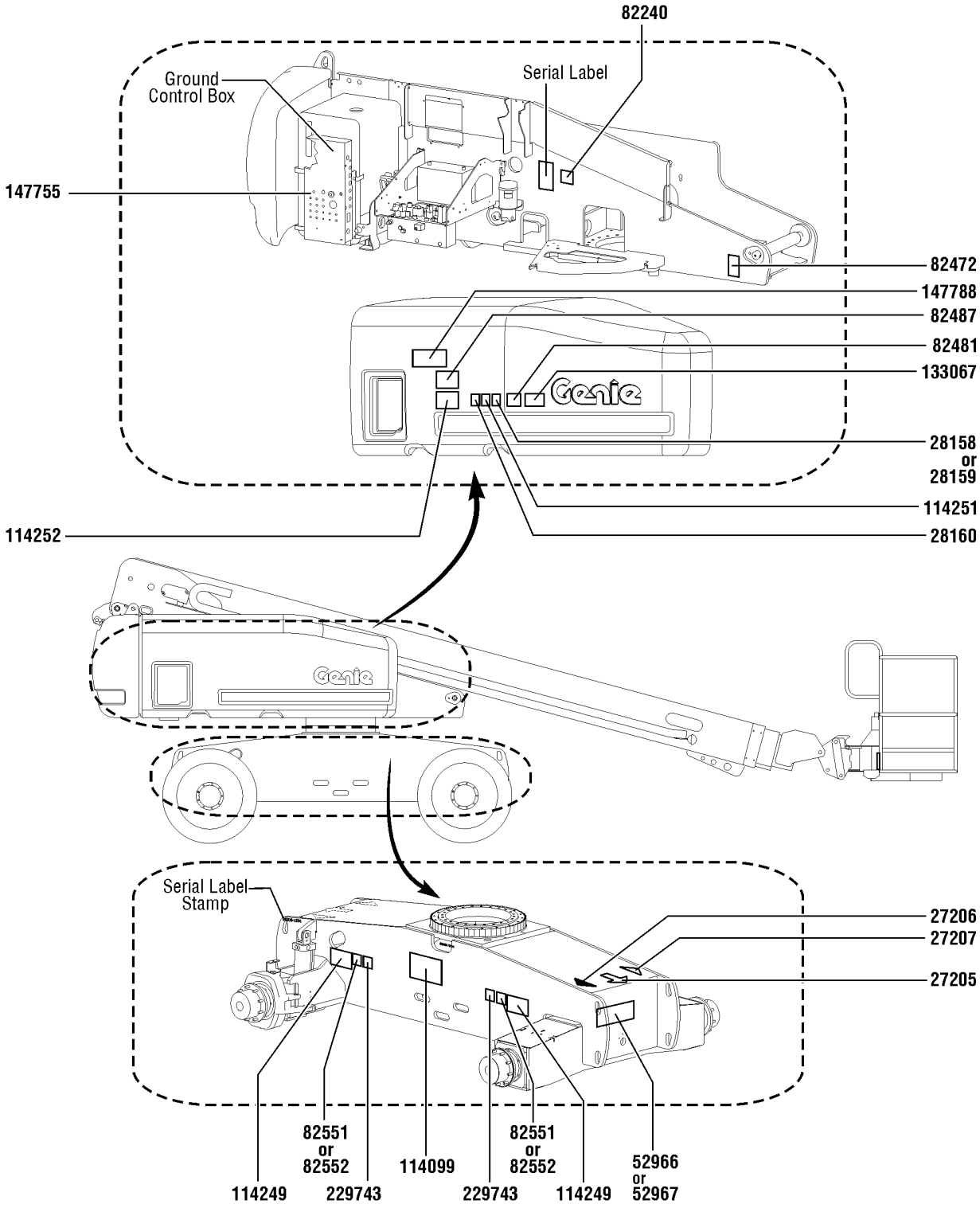

121.1 S-60X Decals with Symbol, Hydraulic Tank Side (ANSI)

Item	Part No.	Description	Qty.
1	27205GT	DECAL,ARROW YELLOW LRG 9"	1
2	27206GT	DECAL,TRIANGLE,BLUE	1
3	27207GT	DECAL,TRIANGLE,YELLOW	1
4	28158GT	DECAL,LABEL,UNLEADED GAS ONLY	1
5	28159GT	DECAL,DIESEL	1
6	28160GT	DECAL,LABEL,LIQUID PROPANE Option, LPG tank	1
7	52966GT	DECAL,COSMETIC,4 X 2	1
8	52967GT	DECAL,COSMETIC,4 X 4	1
9	82240GT	DECAL,LABEL,105 DB	1
10	82472GT	DECAL,WARNING,CRUSHING HAZARD	1
11	82481GT	DECAL,SYMBOL-BATTERY SAFETY	1
12	82551GT	DECAL,LABEL,TIRE PRESSURE	2
13	82552GT	DECAL,LABEL,TIRE PRESS HF Option, hi-floatation tires	2
14	114099GT	DECAL,LABEL,TRANSPORT DIAGRAM	1
15	114249GT	DECAL,LABEL,TIPOVER,TIRES,SYMB	2
16	114251GT	DECAL,LABEL,NO SMOKING,SYMB	1
17	114252GT	DECAL,LABEL,TIP OVER LMT SWTCH	1
18	133067GT	DECAL,DANGER,ELEC.HAZ.STAY CLR	1
19	147755GT	DECAL,GR CNTL PNL 60X 80X	1
20	147788GT	DECAL,INST PLAT CAPACITY,SYM	1
21	229743GT	DECAL,LABEL,WHEEL LOAD S60/60X	2

122.1 S-60X Decals with Symbol, Engine Side (ANSI)

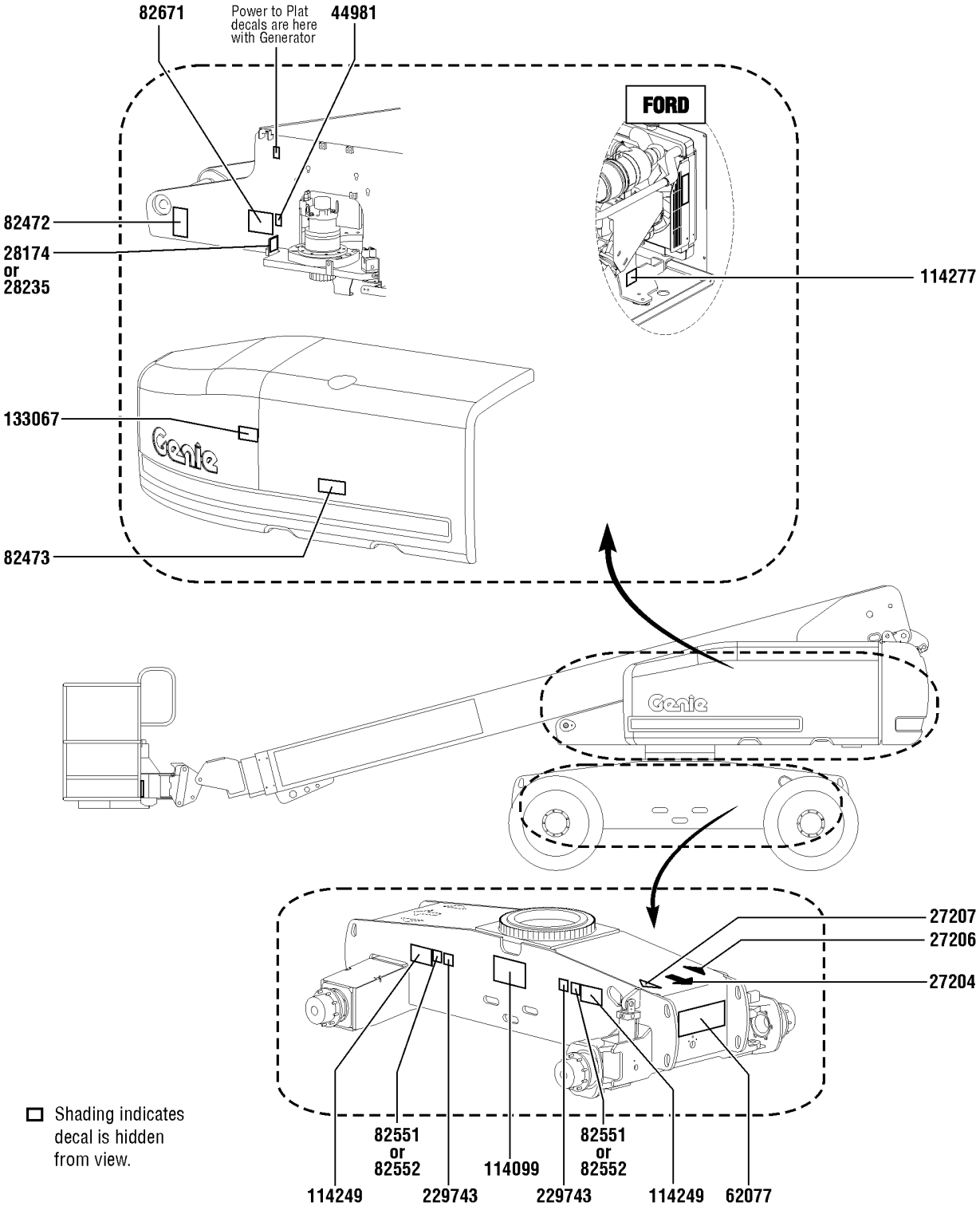

122.1 S-60X Decals with Symbol, Engine Side (ANSI)

Item	Part No.	Description	Qty.
1	25235GT	WELDMENT,NON-OSCILLATING AXLE	1
2	27204GT	DECAL,ARROW BLUE	1
3	27206GT	DECAL,TRIANGLE,BLUE	1
4	27207GT	DECAL,TRIANGLE,YELLOW	1
5	28174GT	DECAL,POWER TO PLATFORM 230V	1
6	44981GT	DECAL,LABEL,AIRLINE 110 PSI Option, airline to plat	1
7	62077GT	DECAL,COSMETIC,S60	1
8	82472GT	DECAL,WARNING,CRUSHING HAZARD	1
9	82473GT	DECAL,SYMBOL-COMP ACCESS	1
10	82551GT	DECAL,LABEL,TIRE PRESSURE	2
11	82552GT	DECAL,LABEL,TIRE PRESS HF Option, hi-floatation tires	2
12	82671GT	DECAL,LABEL,WELD LINE INST,SYM Option, weld cable line	1
13	114099GT	DECAL,LABEL,TRANSPORT DIAGRAM	1
14	114249GT	DECAL,LABEL,TIPOVER,TIRES,SYMB	2
15	114277GT	DECAL,LABEL,BELT ROUTING DSG	1
16	133067GT	DECAL,DANGER,ELEC.HAZ.STAY CLR	1
17	229743GT	DECAL,LABEL,WHEEL LOAD S60/60X	2

123.1 S-60X Decals with Symbol, Boom (ANSI)

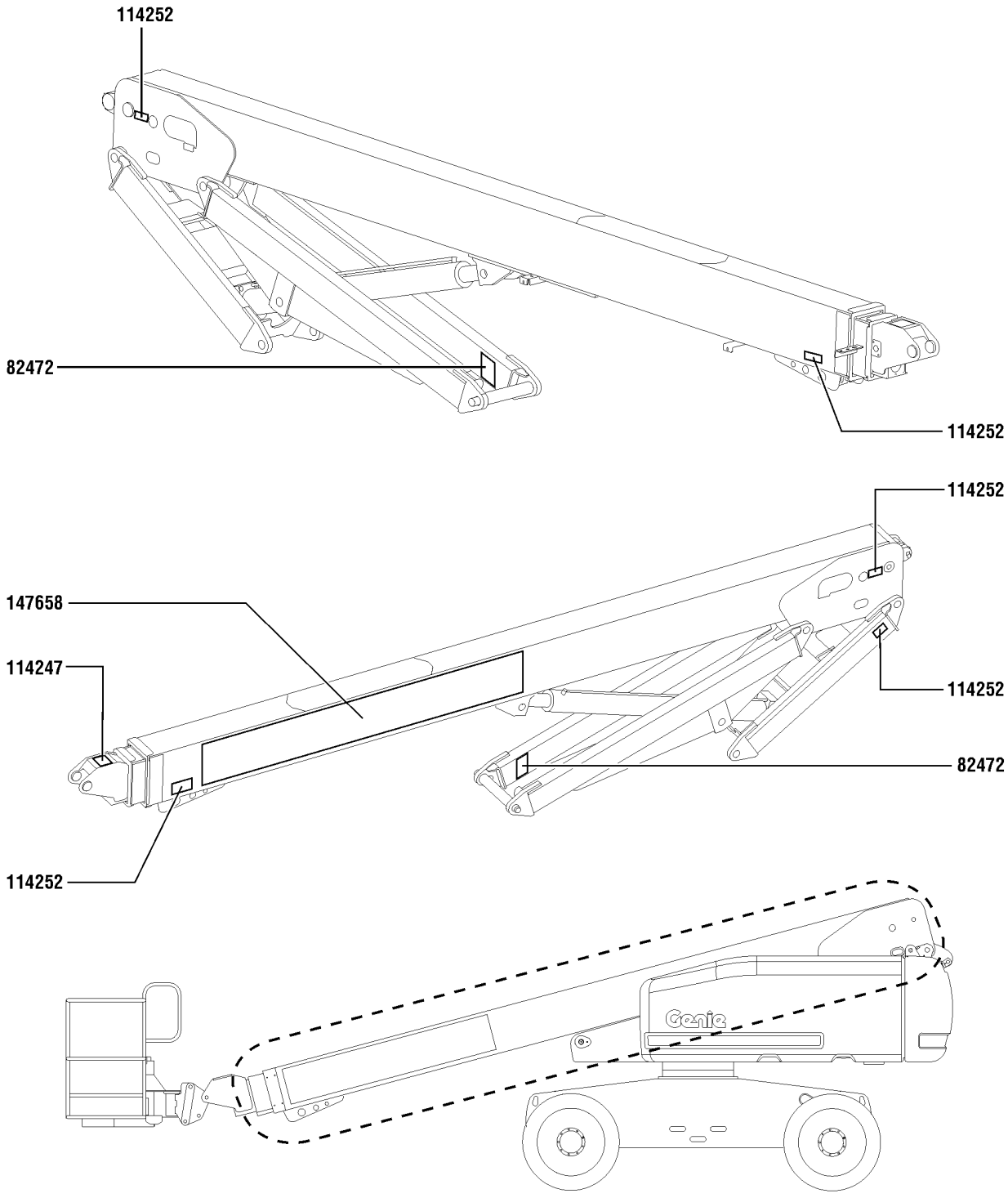

123.1 S-60X Decals with Symbol, Boom (ANSI)

Item	*Part No.*	*Description*	*Qty.*
1	82472GT	DECAL,WARNING,CRUSHING HAZARD	2
2	114247GT	DECAL,LABEL,FALL HAZARD***	1
3	114252GT	DECAL,LABEL,TIP OVER LMT SWTCH	5
4	147658GT	DECAL,COSM GENIE S60X	1

124.1 S-60X Decals with Symbol, Platform (ANSI)

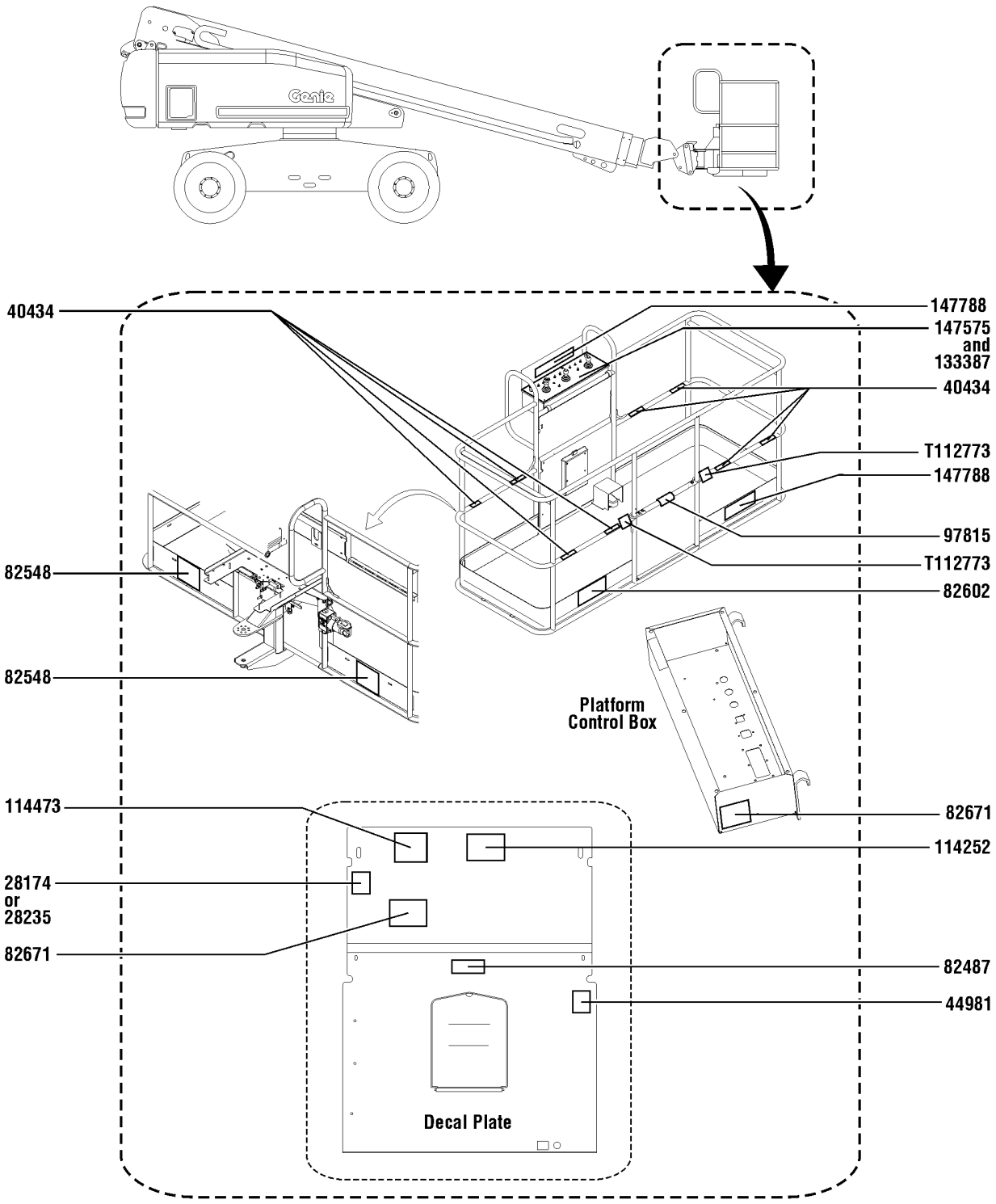

124.1 S-60X Decals with Symbol, Platform (ANSI)

Item	*Part No.*	*Description*	*Qty.*
A	1296264GT	DECAL KIT,S60/65 PLAT SYM,ANSI/CE platform kit	
1	28174GT	DECAL,POWER TO PLATFORM 230V	1
2	28235GT	DECAL,POWER TO PLATFORM 115V	1
3	40434GT	DECAL,LANYARD ANCHORAGE POINT	8
4	44981GT	DECAL,LABEL,AIRLINE 110 PSI Option, airline to plat	1
5	82487GT	DECAL,SYMBOL-READ THE MANUAL	1
6	82548GT	DECAL,WARN,CRUSH HAZARD PLAT	2
7	82602GT	DECAL,DANGER,MAX SIDE FRC,667N	1
8	82671GT	DECAL,LABEL,WELD LINE INST,SYM Option, weld cable line	2
9	97815GT	DECAL,LABEL,LOWER MIDRAIL	1
10	114252GT	DECAL,LABEL,TIP OVER LMT SWTCH	1
11	114473GT	DECAL,DANGER,TIPOVER,TILT,SYM	1
12	133387GT	DECAL,DRIVE ENABLE PATCH	1
13	147575GT	DECAL, PLAT CNTL PNL 60X 80X	1
14	147788GT	DECAL,INST PLAT CAPACITY,SYM	2
15	T112773GT	TAPE, PROTECTIVE MASK	2

125.1 S-60XC Decals with Word, Hydraulic Tank Side (ANSI)

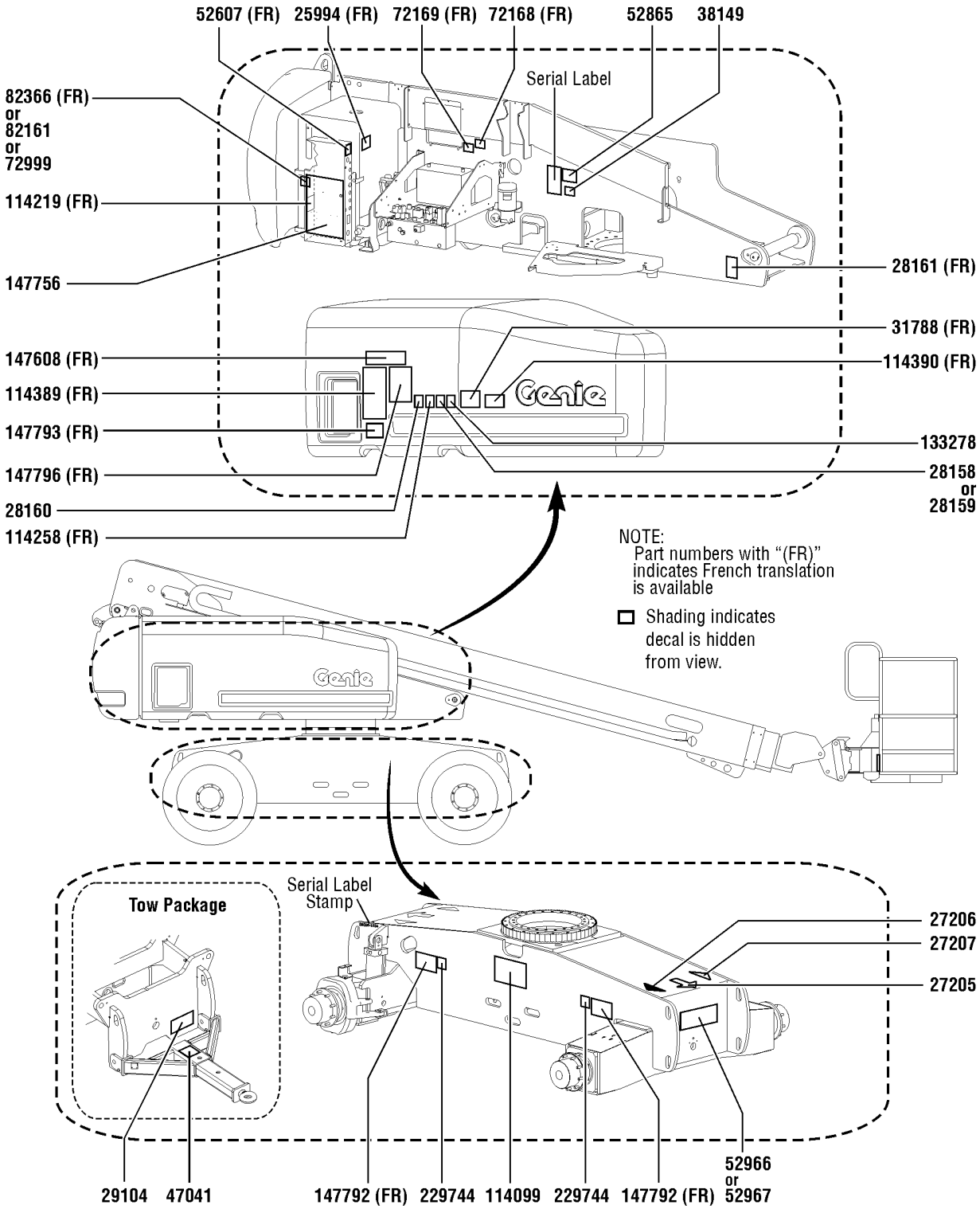

125.1 S-60XC Decals with Word, Hydraulic Tank Side (ANSI)

Item	Part No.	Description	Qty.
1	25994GT	DECAL,NOTICE,SHUTOFF VALVES	1
2	27205GT	DECAL,ARROW YELLOW LRG 9"	1
3	27206GT	DECAL,TRIANGLE,BLUE	1
4	27207GT	DECAL,TRIANGLE,YELLOW	1
5	28158GT	DECAL,LABEL,UNLEADED GAS ONLY	1
6	28159GT	DECAL,DIESEL	1
7	28160GT	DECAL,LABEL,LIQUID PROPANE Option, LPG tank	1
8	28161GT	DECAL,WARN,CRUSH HAZARD HAND	1
9	29104GT	DECAL,TOWING INSTRUCTIONS Option, tow package	1
10	31788GT	DECAL,DANGER,BATTERY SAFETY***	1
11	38149GT	DECAL,LABEL,PATENTS	1
12	47041GT	DECAL,CAUTION,TOWING SPEED Option, tow package	1
13	52607GT	DECAL,LABEL,TEST*** Ford only	1
14	52865GT	DECAL,ANNUAL INSP***	1
15	52966GT	DECAL,COSMETIC,4 X 2	1
16	52967GT	DECAL,COSMETIC,4 X 4	1
17	72168GT	DECAL,LABEL,STARTER BATTERY	1
18	72169GT	DECAL,LABEL,CONTROLS BATTERY	1
19	72999GT	DECAL,LABEL,PETRO CANADA***	1
20	82161GT	DECAL,LABEL,UCON HYDROLUBE	1
21	82366GT	DECAL,CHEVRON RANDO HD	1
22	114099GT	DECAL,LABEL,TRANSPORT DIAGRAM	1
23	114219GT	DECAL,LABEL,RELAYS,S60&65	1
24	114258GT	DECAL,DANGER,NO SMOKING	1
25	114389GT	DECAL,DANGER,GENERAL SAFETY	1
26	114390GT	DECAL,DANGER,ELECT HAZARD***	1
27	133278GT	DECAL,LOW/ULTRA LOW SULFR FUEL Diesel models only	1
28	147608GT	DECAL,INST PLAT CAP 60XC	1

125.1 S-60XC Decals with Word, Hydraulic Tank Side (ANSI)

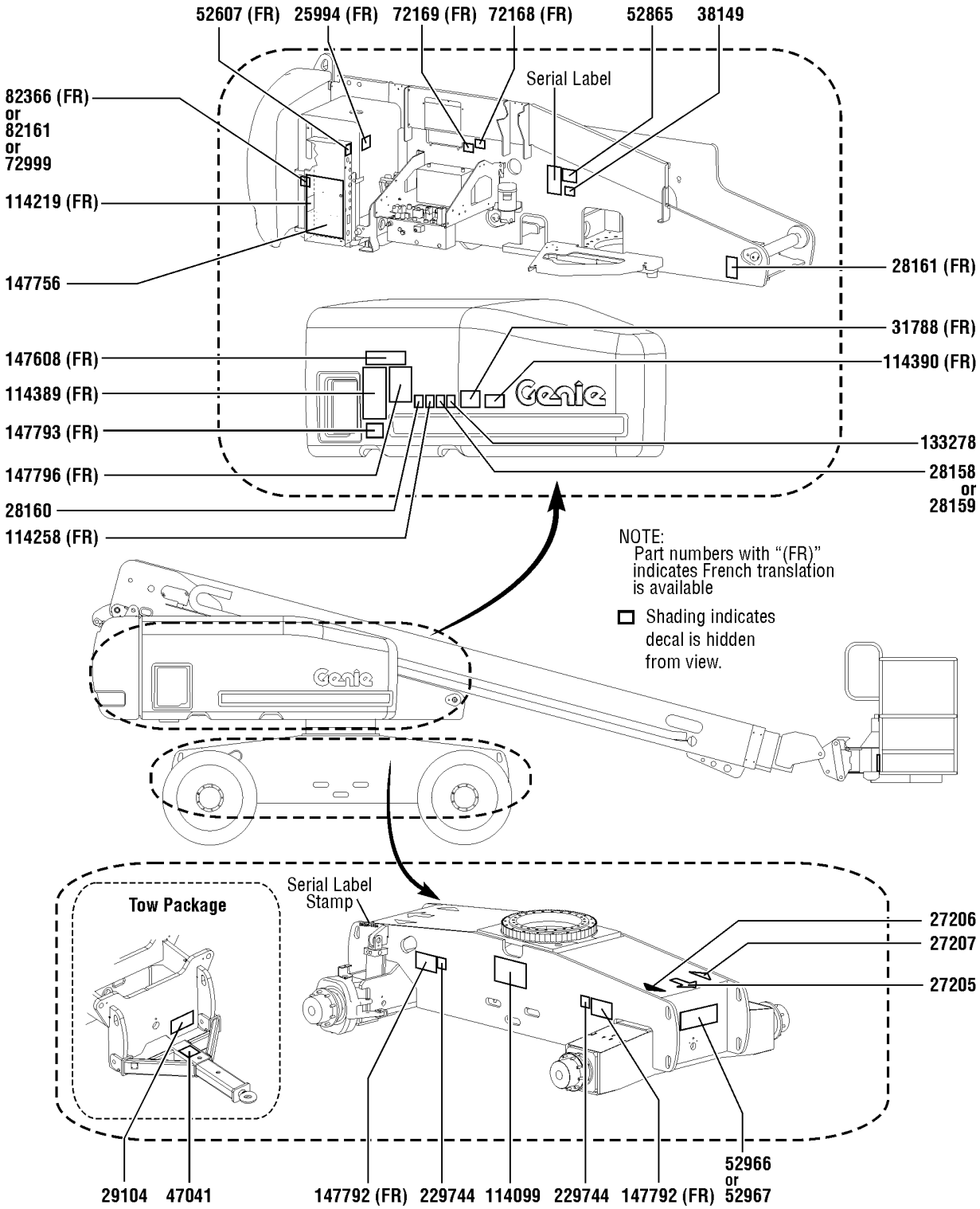

125.1 S-60XC Decals with Word, Hydraulic Tank Side (ANSI)

Item	*Part No.*	*Description*	*Qty.*
29	147756GT	DECAL,GR CNTL PNL 60XC	1
30	147792GT	DANGER,TIPOVR,TIRES FF ONLY	2
31	147793GT	DECAL,DANGER,TIPOVR,MAX CAP	1
32	147796GT	DECAL, OPER INST 60XC GRD	1
33	229744GT	DECAL,LABEL,WHEEL LOAD S60H/XC	2

126.1 S-60XC Decals with Word, Engine Side (ANSI)

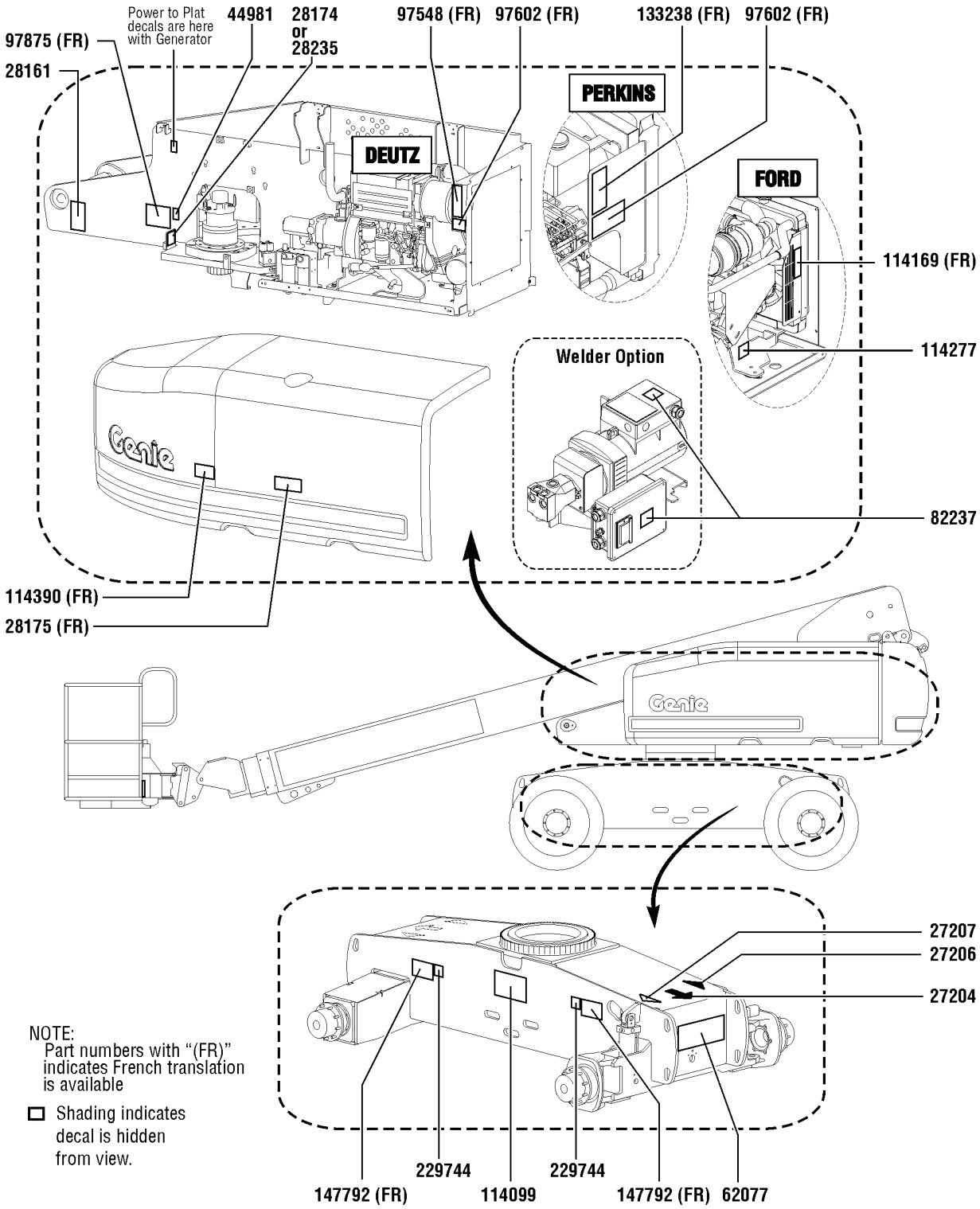

126.1 S-60XC Decals with Word, Engine Side (ANSI)

Item	Part No.	Description	Qty.
1	27204GT	DECAL,ARROW BLUE	1
2	27206GT	DECAL,TRIANGLE,BLUE	1
3	27207GT	DECAL,TRIANGLE,YELLOW	1
4	28161GT	DECAL,WARN,CRUSH HAZARD HAND	1
5	28174GT	DECAL,POWER TO PLATFORM 230V	1
6	28175GT	DECAL,WARNING-COMPART ACCESS	1
7	28235GT	DECAL,POWER TO PLATFORM 115V	1
8	44981GT	DECAL,LABEL,AIRLINE 110 PSI Option, airline to plat	1
9	62077GT	DECAL,COSMETIC,S60	1
10	82237GT	DECAL,DANGER,HIGH VOLTAGE Option, welder	2
11	97548GT	DECAL,ENGINE SPEC,DEUTZ 2011	1
12	97602GT	DECAL,EXPLOSION HAZARD	1
13	97875GT	DECAL,WARN.WELD LINE INST.WORD Option, weld cable line	1
14	114099GT	DECAL,LABEL,TRANSPORT DIAGRAM	1
15	114169GT	DECAL,FORD ENGINE SPEC DSG423	1
16	114277GT	DECAL,LABEL,BELT ROUTING DSG	1
17	114390GT	DECAL,DANGER,ELECT HAZARD***	1
18	133238GT	DECAL,ENGINE SPEC,PERKINS***	1
19	147792GT	DANGER,TIPOVR,TIRES FF ONLY	2
20	229744GT	DECAL,LABEL,WHEEL LOAD S60H/XC	2

127.1 S-60XC Decals with Word, Boom (ANSI)

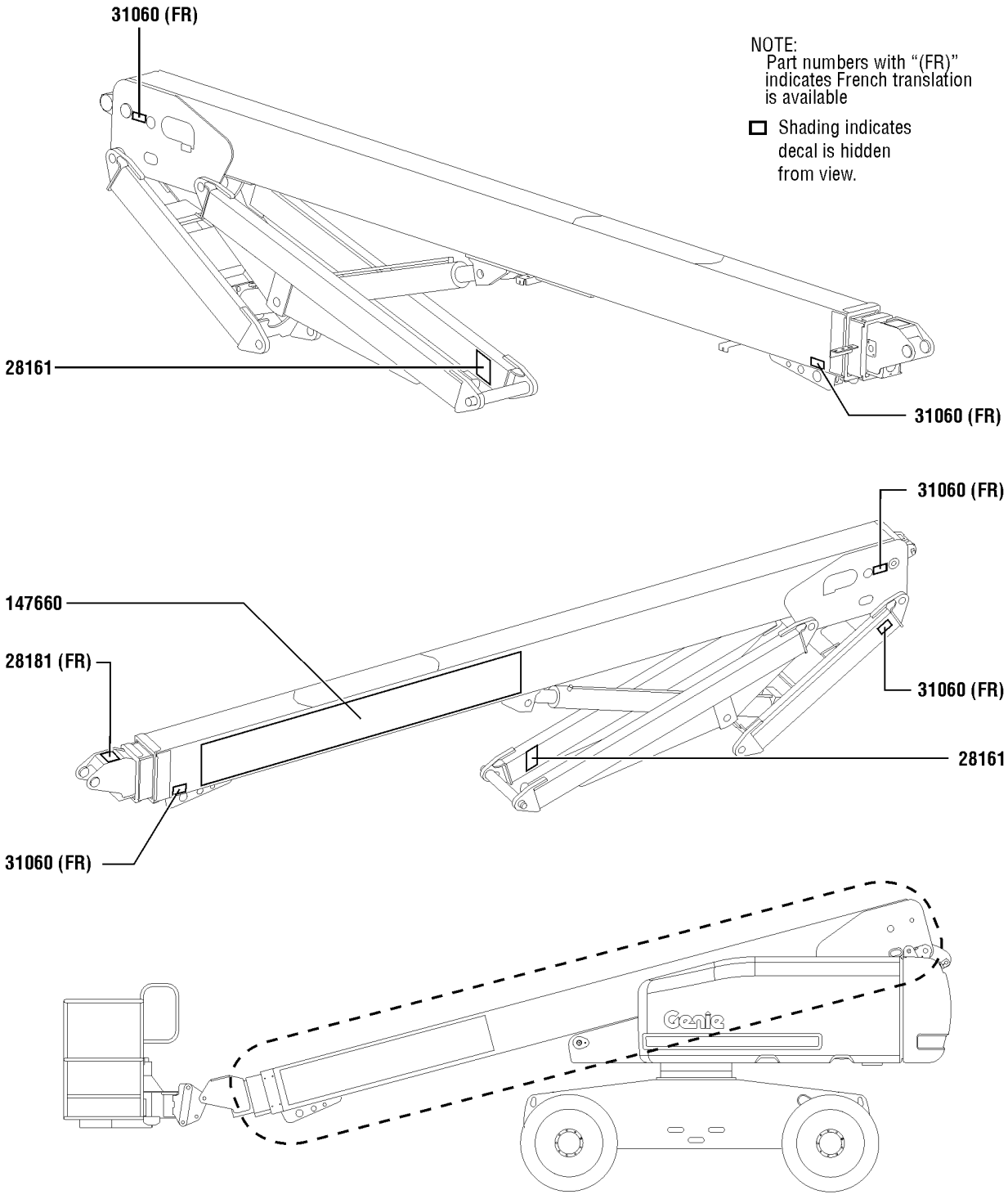

127.1 S-60XC Decals with Word, Boom (ANSI)

Item	*Part No.*	*Description*	*Qty.*
1	28161GT	DECAL,WARN,CRUSH HAZARD HAND	2
2	28181GT	DECAL,WARN,FALL HAZARD	1
3	31060GT	DECAL,DANGER DO NOT ALTER SWTC	5
4	147660GT	DECAL,COSM GENIE S60XC	1

128.1 S-60XC Decals with Word, Platform (ANSI)

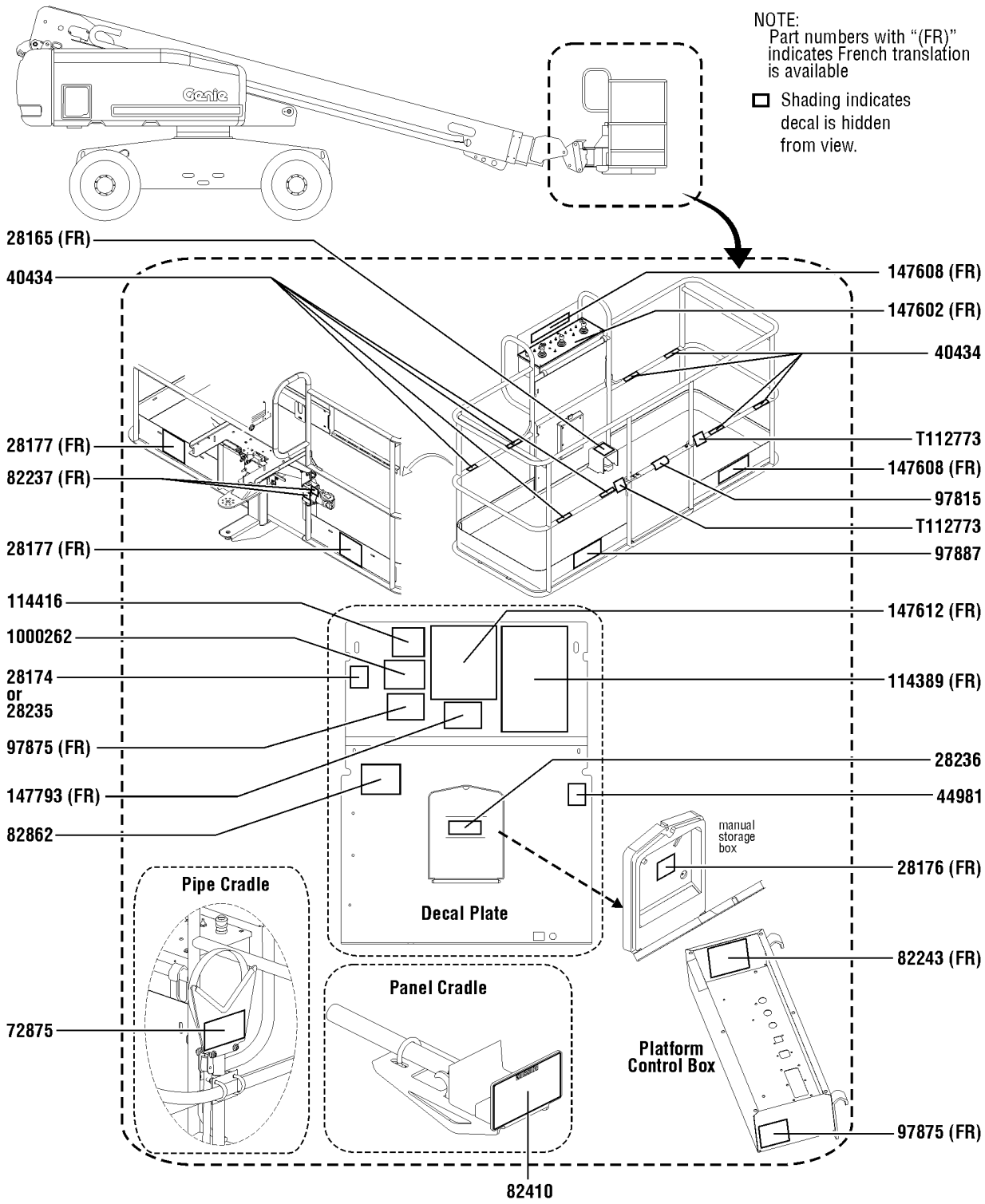

128.1 S-60XC Decals with Word, Platform (ANSI)

Item	Part No.	Description	Qty.
A	1251643GT	DECAL KIT,PLAT,S60/65 WRD,ANSI/AUS platform kit	
1	28165GT	DECAL,INSTRUCT,FOOTSWITCH OPER	1
2	28174GT	DECAL,POWER TO PLATFORM 230V	1
3	28176GT	DECAL,LABEL,MANUAL NOT HERE	1
4	28177GT	DECAL,WARN,CRUSH HAZARD PLAT	2
5	28235GT	DECAL,POWER TO PLATFORM 115V	1
6	28236GT	DECAL,WARN,IMPROPER OPERATION	1
7	40434GT	DECAL,LANYARD ANCHORAGE POINT	8
8	44981GT	DECAL,LABEL,AIRLINE 110 PSI Option, airline to plat	1
9	72875GT	DECAL,WARNING,PIPE CRADLE,BOOM Option, pipe cradle	2
10	82237GT	DECAL,DANGER,HIGH VOLTAGE Option, welder	2
11	82243GT	DECAL FAULT CODE	1
12	82410GT	DECAL,WARNING,PANEL CRADLE Option, panel cradle	2
13	82862GT	DECAL,FIRE EXTINGUISHER Option, welder	1
14	97815GT	DECAL,LABEL,LOWER MIDRAIL	1
15	97875GT	DECAL,WARN.WELD LINE INST.WORD Option, weld cable line	2
16	97887GT	DECAL,INSTR,MAX SIDE FRC,ANSI	1
17	114389GT	DECAL,DANGER,GENERAL SAFETY	1
18	114416GT	DECAL,DANGER,TIPOVER,TILT	1
19	147602GT	DECAL, PLAT CNTL PNL 60XC	1
20	147608GT	DECAL,INST PLAT CAP 60XC	2
21	147612GT	DECAL,INST OPER INST 60XC	1
22	147793GT	DECAL,DANGER,TIPOVR,MAX CAP	1
23	1000262GT	DECAL,DANGER,TIP OVER,PLAT	1
24	T112773GT	TAPE, PROTECTIVE MASK	2

129.1 S-60XC Decals with Symbol, Hydraulic Tank Side (ANSI)

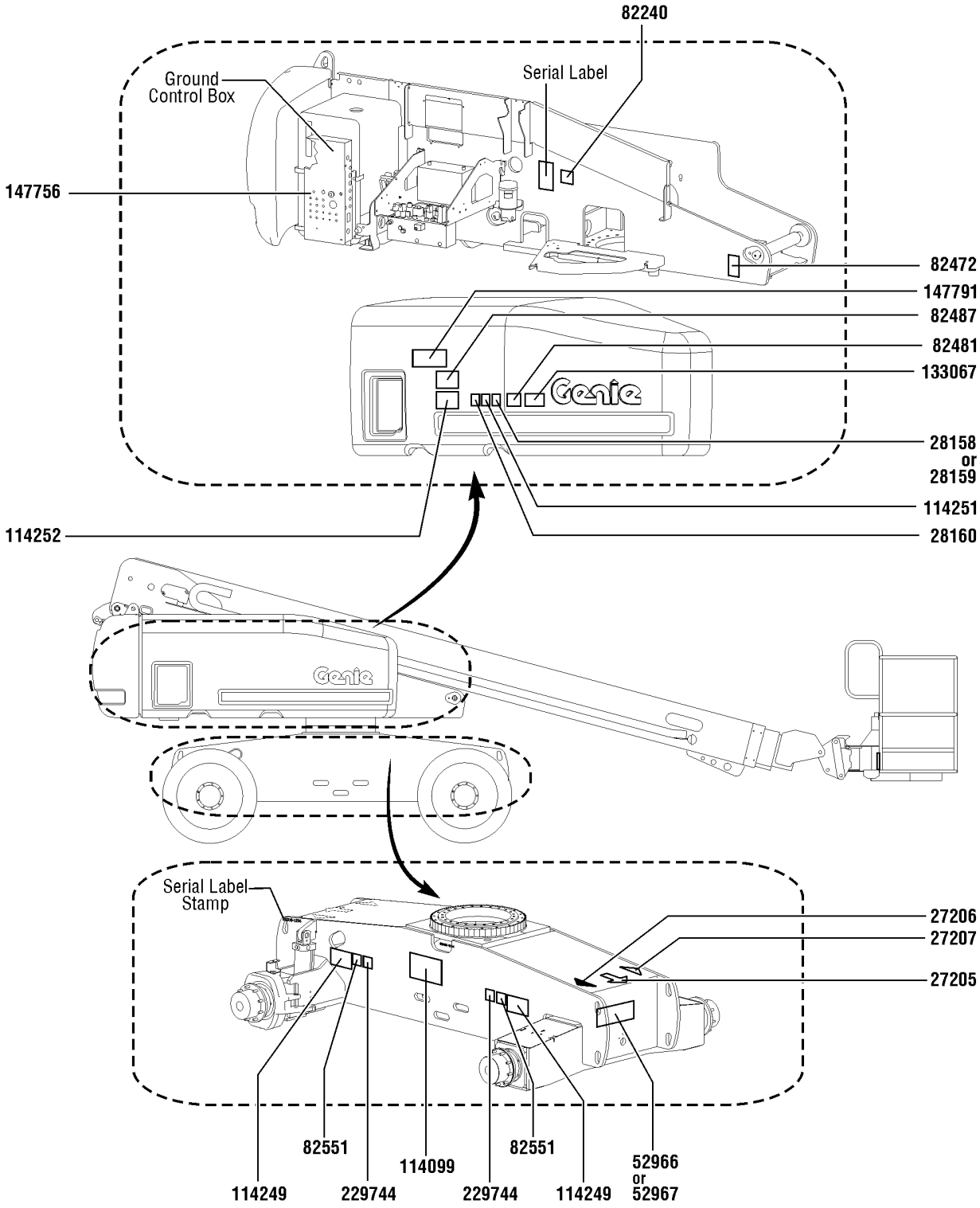

129.1 S-60XC Decals with Symbol, Hydraulic Tank Side (ANSI)

Item	Part No.	Description	Qty.
1	27205GT	DECAL,ARROW YELLOW LRG 9"	1
2	27206GT	DECAL,TRIANGLE,BLUE	1
3	27207GT	DECAL,TRIANGLE,YELLOW	1
4	28158GT	DECAL,LABEL,UNLEADED GAS ONLY	1
5	28159GT	DECAL,DIESEL	1
6	28160GT	DECAL,LABEL,LIQUID PROPANE Option, LPG tank	1
7	52966GT	DECAL,COSMETIC,4 X 2	1
8	52967GT	DECAL,COSMETIC,4 X 4	1
9	82240GT	DECAL,LABEL,105 DB	1
10	82472GT	DECAL,WARNING,CRUSHING HAZARD	1
11	82481GT	DECAL,SYMBOL-BATTERY SAFETY	1
12	82487GT	DECAL,SYMBOL-READ THE MANUAL	1
13	82551GT	DECAL,LABEL,TIRE PRESSURE	2
14	114099GT	DECAL,LABEL,TRANSPORT DIAGRAM	1
15	114249GT	DECAL,LABEL,TIPOVER,TIRES,SYMB	1
16	114251GT	DECAL,LABEL,NO SMOKING,SYMB	1
17	114252GT	DECAL,LABEL,TIP OVER LMT SWTCH	1
18	114349GT	OPT,COSM DECAL,NES S105	1
19	133067GT	DECAL,DANGER,ELEC.HAZ.STAY CLR	1
20	147756GT	DECAL,GR CNTL PNL 60XC	1
21	147791GT	DECAL,INST PLAT CAP 60XC SYM	1
22	229744GT	DECAL,LABEL,WHEEL LOAD S60H/XC	2

130.1 S-60XC Decals with Symbol, Engine Side (ANSI)

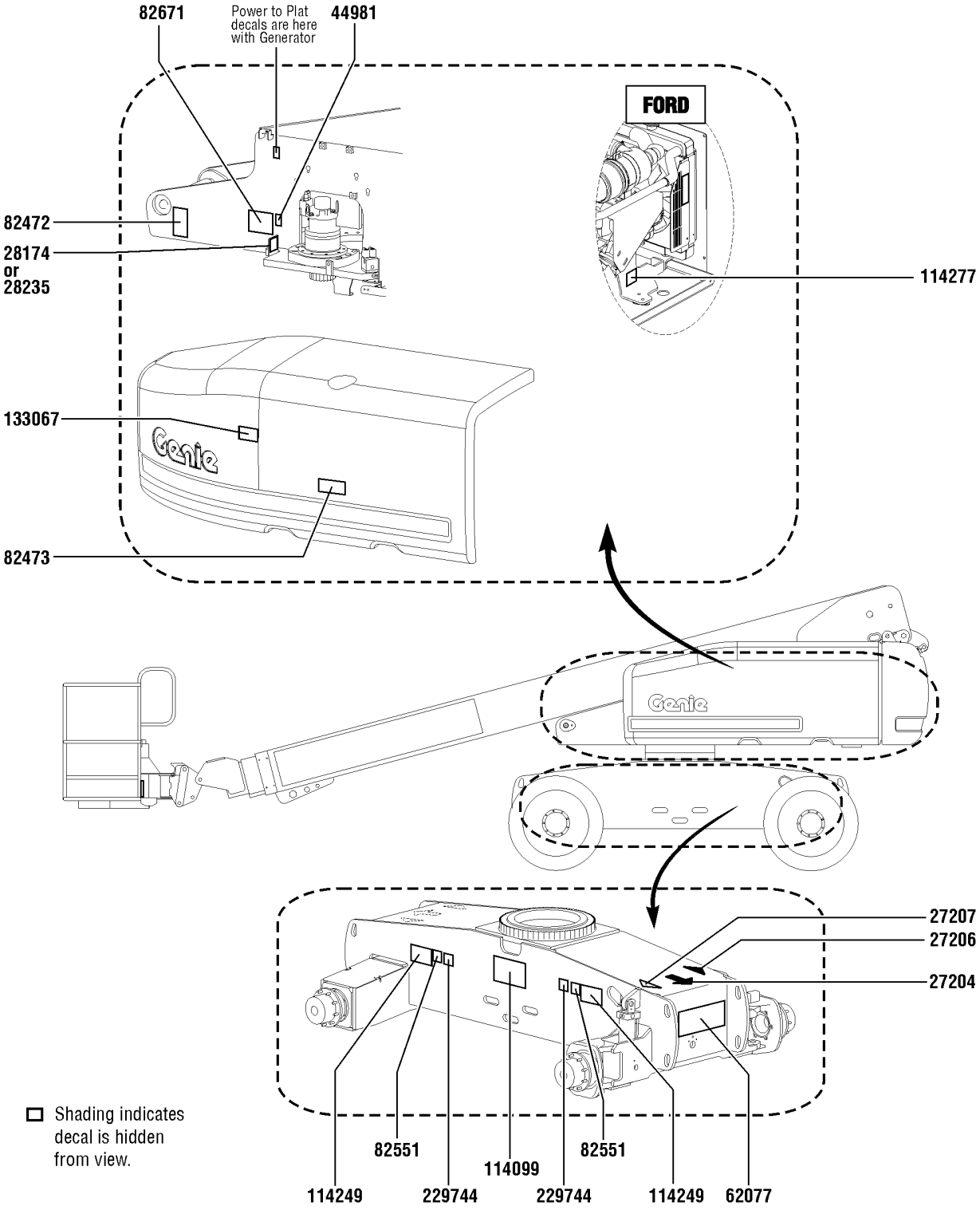

130.1 S-60XC Decals with Symbol, Engine Side (ANSI)

Item	*Part No.*	*Description*	*Qty.*
1	27204GT	DECAL,ARROW BLUE	1
2	27206GT	DECAL,TRIANGLE,BLUE	1
3	27207GT	DECAL,TRIANGLE,YELLOW	1
4	28174GT	DECAL,POWER TO PLATFORM 230V	1
5	28235GT	DECAL,POWER TO PLATFORM 115V	1
6	44981GT	DECAL,LABEL,AIRLINE 110 PSI Option, airline to plat	1
7	62077GT	DECAL,COSMETIC,S60	1
8	82472GT	DECAL,WARNING,CRUSHING HAZARD	1
9	82473GT	DECAL,SYMBOL-COMP ACCESS	1
10	82551GT	DECAL,LABEL,TIRE PRESSURE	2
11	82671GT	DECAL,LABEL,WELD LINE INST,SYM Option, weld cable line	1
12	114099GT	DECAL,LABEL,TRANSPORT DIAGRAM	1
13	114219GT	DECAL,LABEL,RELAYS,S60&65	1
14	114249GT	DECAL,LABEL,TIPOVER,TIRES,SYMB	1
15	114277GT	DECAL,LABEL,BELT ROUTING DSG	1
16	133067GT	DECAL,DANGER,ELEC.HAZ.STAY CLR	1
17	229744GT	DECAL,LABEL,WHEEL LOAD S60H/XC	2

131.1 S-60XC Decals with Symbol, Boom (ANSI)

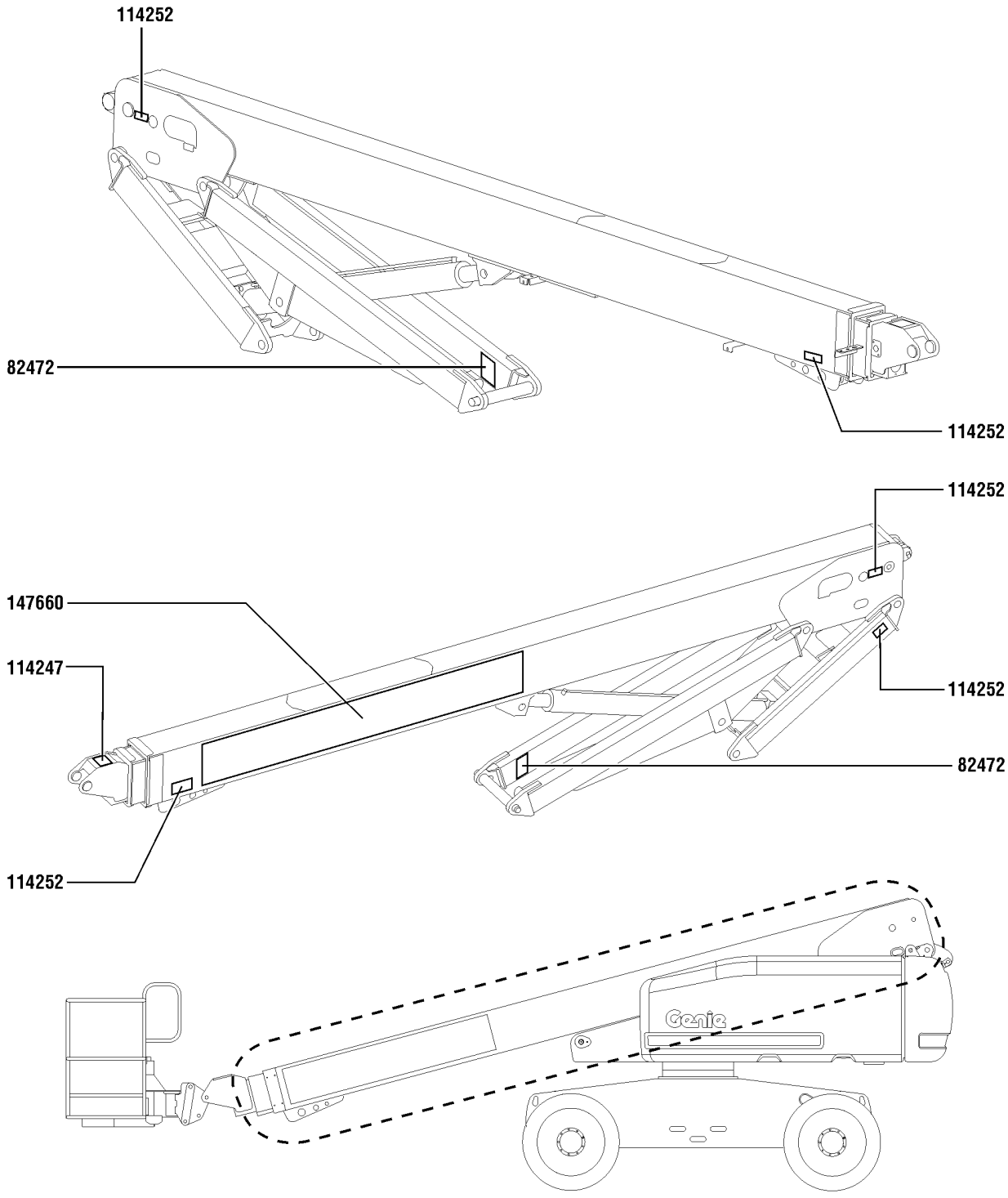

131.1 S-60XC Decals with Symbol, Boom (ANSI)

Item	*Part No.*	*Description*	*Qty.*
1	82472GT	DECAL,WARNING,CRUSHING HAZARD	2
2	114247GT	DECAL,LABEL,FALL HAZARD***	1
3	114252GT	DECAL,LABEL,TIP OVER LMT SWTCH	5
4	147660GT	DECAL,COSM GENIE S60XC	1

132.1 S-60XC Decals with Symbol, Platform (ANSI)

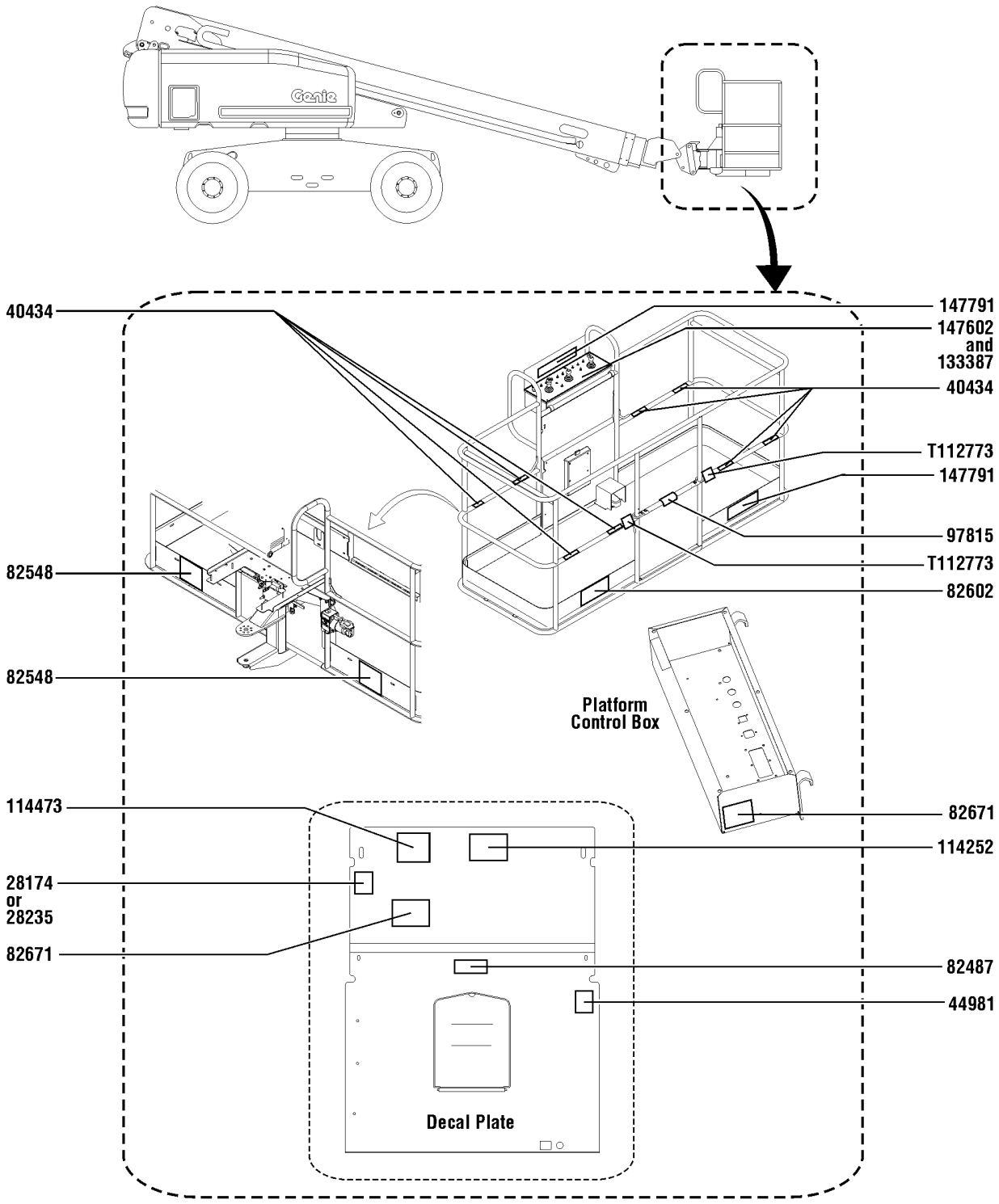

132.1 S-60XC Decals with Symbol, Platform (ANSI)

Item	*Part No.*	*Description*	*Qty.*
A	1296264GT	DECAL KIT,S60/65 PLAT SYM,ANSI/CE platform kit	
1	28174GT	DECAL,POWER TO PLATFORM 230V	1
2	28235GT	DECAL,POWER TO PLATFORM 115V	1
3	40434GT	DECAL,LANYARD ANCHORAGE POINT	8
4	44981GT	DECAL,LABEL,AIRLINE 110 PSI Option, airline to plat	1
5	82487GT	DECAL,SYMBOL-READ THE MANUAL	1
6	82548GT	DECAL,WARN,CRUSH HAZARD PLAT	2
7	82602GT	DECAL,DANGER,MAX SIDE FRC,667N	1
8	82671GT	DECAL,LABEL,WELD LINE INST,SYM Option, weld cable line	2
9	97815GT	DECAL,LABEL,LOWER MIDRAIL	1
10	114252GT	DECAL,LABEL,TIP OVER LMT SWTCH	1
11	114473GT	DECAL,DANGER,TIPOVER,TILT,SYM	1
12	133387GT	DECAL,DRIVE ENABLE PATCH	1
13	147602GT	DECAL, PLAT CNTL PNL 60XC	1
14	147791GT	DECAL,INST PLAT CAP 60XC SYM	2
15	T112773GT	TAPE, PROTECTIVE MASK	2

133.1 S-60TX Decals with Word, Hydraulic Tank Side (ANSI & Australia)

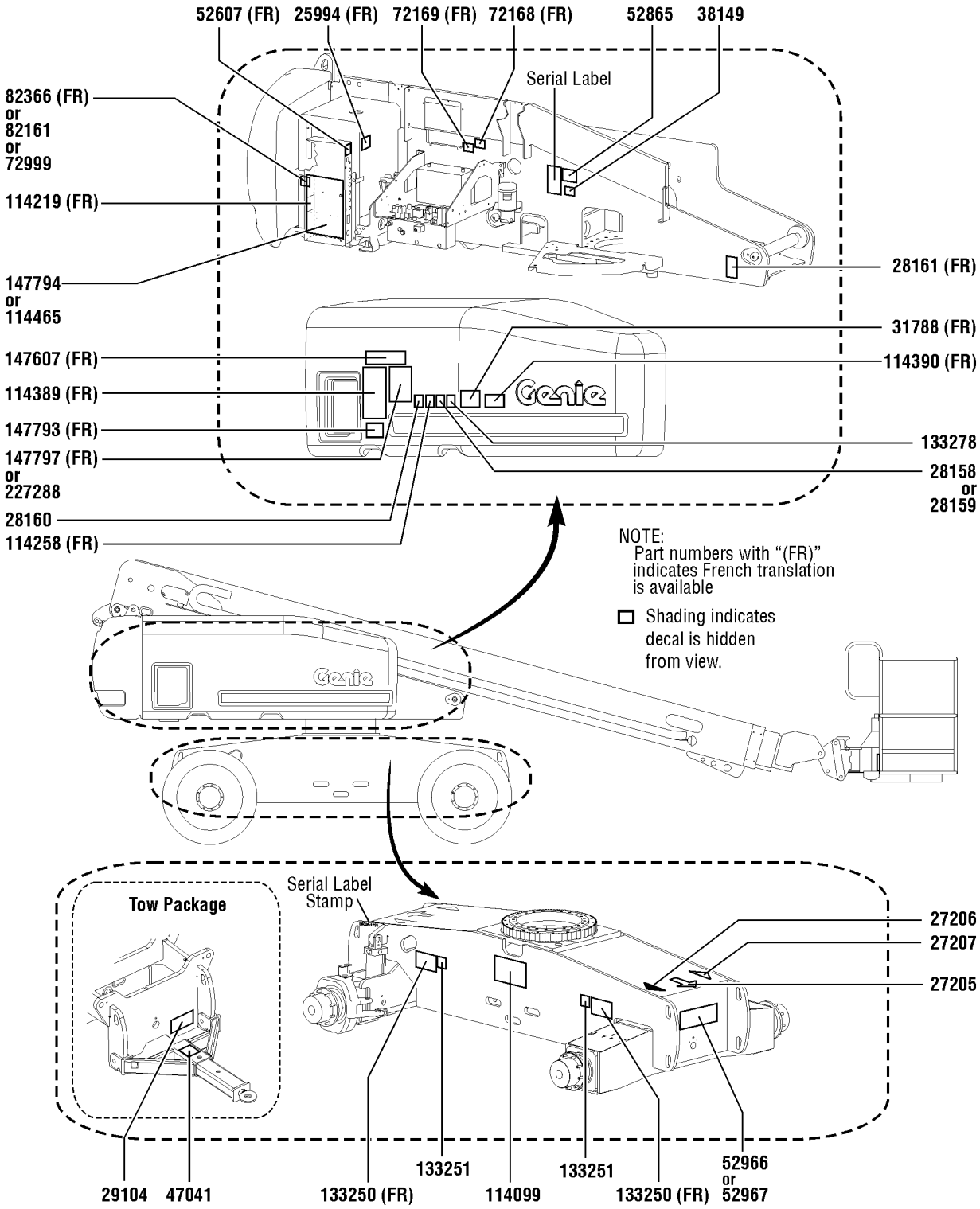

133.1 S-60TX Decals with Word, Hydraulic Tank Side (ANSI & Australia)

Item	Part No.	Description	Qty.
1	25994GT	DECAL,NOTICE,SHUTOFF VALVES	1
2	27205GT	DECAL,ARROW YELLOW LRG 9"	1
3	27206GT	DECAL,TRIANGLE,BLUE	1
4	27207GT	DECAL,TRIANGLE,YELLOW	1
5	28158GT	DECAL,LABEL,UNLEADED GAS ONLY	1
6	28159GT	DECAL,DIESEL	1
7	28160GT	DECAL,LABEL,LIQUID PROPANE Option, LPG tank	1
8	28161GT	DECAL,WARN,CRUSH HAZARD HAND	1
9	29104GT	DECAL,TOWING INSTRUCTIONS Option, tow package	1
10	31788GT	DECAL,DANGER,BATTERY SAFETY***	1
11	38149GT	DECAL,LABEL,PATENTS US only	1
12	47041GT	DECAL,CAUTION,TOWING SPEED Option, tow package	1
13	52607GT	DECAL,LABEL,TEST*** Ford only	1
14	52865GT	DECAL,ANNUAL INSP*** ANSI only	1
15	52966GT	DECAL,COSMETIC,4 X 2	1
16	52967GT	DECAL,COSMETIC,4 X 4	1
17	72168GT	DECAL,LABEL,STARTER BATTERY	1
18	72169GT	DECAL,LABEL,CONTROLS BATTERY	1
19	72999GT	DECAL,LABEL,PETRO CANADA***	1
20	82161GT	DECAL,LABEL,UCON HYDROLUBE	1
21	82366GT	DECAL,CHEVRON RANDO HD	1
22	114099GT	DECAL,LABEL,TRANSPORT DIAGRAM	1
23	114219GT	DECAL,LABEL,RELAYS,S60&65	1
24	114258GT	DECAL,DANGER,NO SMOKING	1
25	114389GT	DECAL,DANGER,GENERAL SAFETY	1
26	114390GT	DECAL,DANGER,ELECT HAZARD***	1
27	114465GT	DECAL GROUND CONTROL BOX AUS only	1
28	133250GT	DECAL,DANGER TIP OVER TRAX	2

133.1 S-60TX Decals with Word, Hydraulic Tank Side (ANSI & Australia)

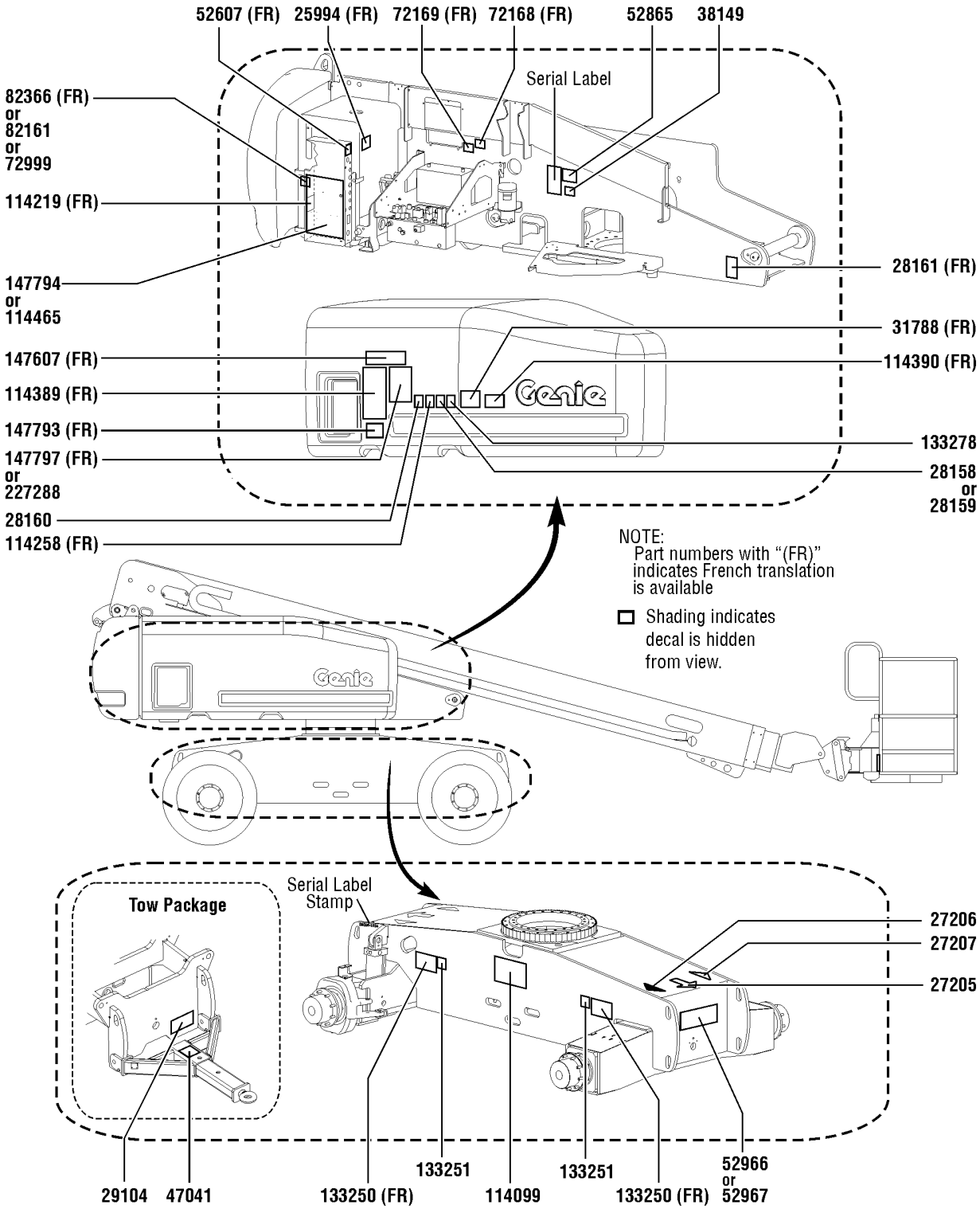

133.1 S-60TX Decals with Word, Hydraulic Tank Side (ANSI & Australia)

Item	*Part No.*	*Description*	*Qty.*
29	133251GT	DECAL, WHEEL LOAD S60TRAX	2
30	133278GT	DECAL,LOW/ULTRA LOW SULFR FUEL Diesel models only	1
31	147607GT	DECAL,INST PLAT CAP 60TRAX	1
32	147793GT	DECAL,DANGER,TIPOVR,MAX CAP ANSI only	1
33	147794GT	DECAL,GR CNTL PNL 60TX ANSI only	1
34	147797GT	DECAL, OPER INST 60TRX GRD ANSI only	1
35	227288GT	DECAL, OPERATING INSTRUCTIONS AUS only	1

134.1 S-60TX Decals with Word, Engine Side (ANSI & Australia)

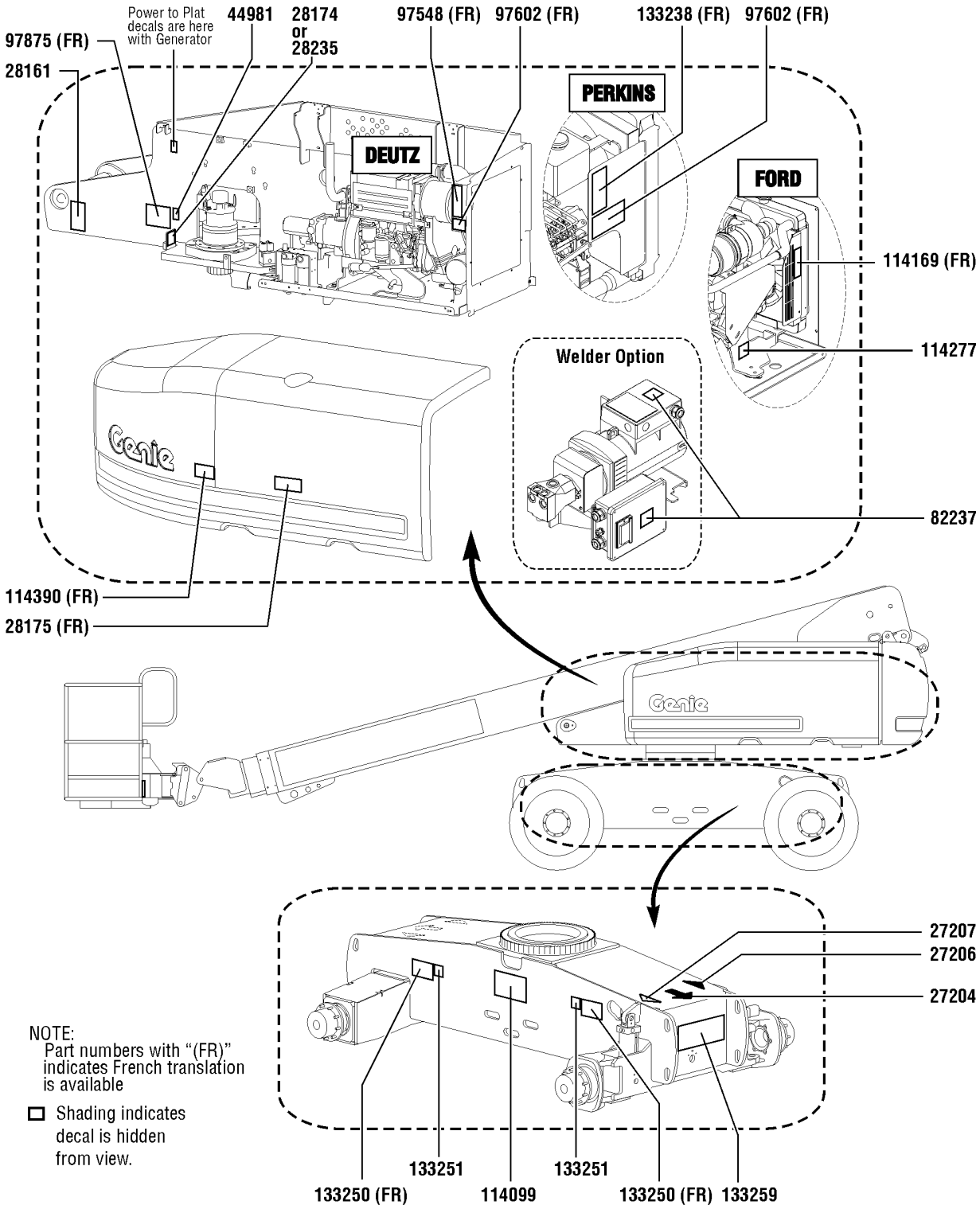

134.1 S-60TX Decals with Word, Engine Side (ANSI & Australia)

Item	*Part No.*	*Description*	*Qty.*
1	27204GT	DECAL,ARROW BLUE	1
2	27206GT	DECAL,TRIANGLE,BLUE	1
3	27207GT	DECAL,TRIANGLE,YELLOW	1
4	28161GT	DECAL,WARN,CRUSH HAZARD HAND	1
5	28174GT	DECAL,POWER TO PLATFORM 230V	1
6	28175GT	DECAL,WARNING-COMPART ACCESS	1
7	28235GT	DECAL,POWER TO PLATFORM 115V	1
8	44981GT	DECAL,LABEL,AIRLINE 110 PSI Option, airline to plat	1
9	82237GT	DECAL,DANGER,HIGH VOLTAGE Option, welder	2
10	97548GT	DECAL,ENGINE SPEC,DEUTZ 2011	1
11	97602GT	DECAL,EXPLOSION HAZARD	1
12	97875GT	DECAL,WARN.WELD LINE INST.WORD Option, weld cable line	1
13	114099GT	DECAL,LABEL,TRANSPORT DIAGRAM	1
14	114169GT	DECAL,FORD ENGINE SPEC DSG423	1
15	114277GT	DECAL,LABEL,BELT ROUTING DSG	1
16	114390GT	DECAL,DANGER,ELECT HAZARD***	1
17	133238GT	DECAL,ENGINE SPEC,PERKINS***	1
18	133250GT	DECAL,DANGER TIP OVER TRAX	2
19	133251GT	DECAL, WHEEL LOAD S60TRAX	2
20	133259GT	DECAL,COSM, S60 TRAX	1

135.1 S-60TX Decals with Word, Boom (ANSI & Australia)

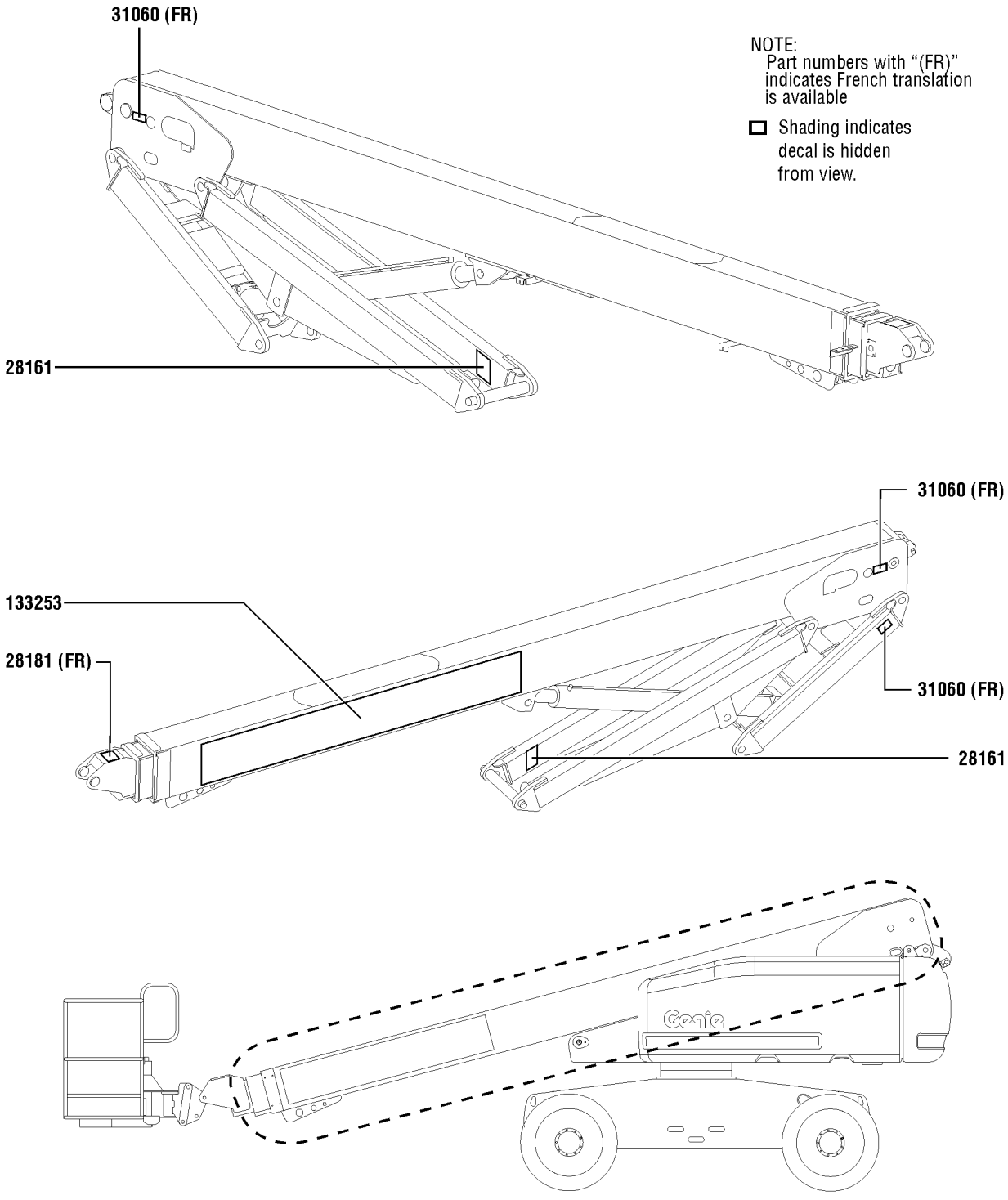

135.1 S-60TX Decals with Word, Boom (ANSI & Australia)

Item	*Part No.*	*Description*	*Qty.*
1	28161GT	DECAL,WARN,CRUSH HAZARD HAND	2
2	28181GT	DECAL,WARN,FALL HAZARD	1
3	31060GT	DECAL,DANGER DO NOT ALTER SWTC	3
4	133253GT	DECAL,COSM,GENIE S60 TRAX	1

136.1 S-60TX Decals with Word, Platform (ANSI & Australia)

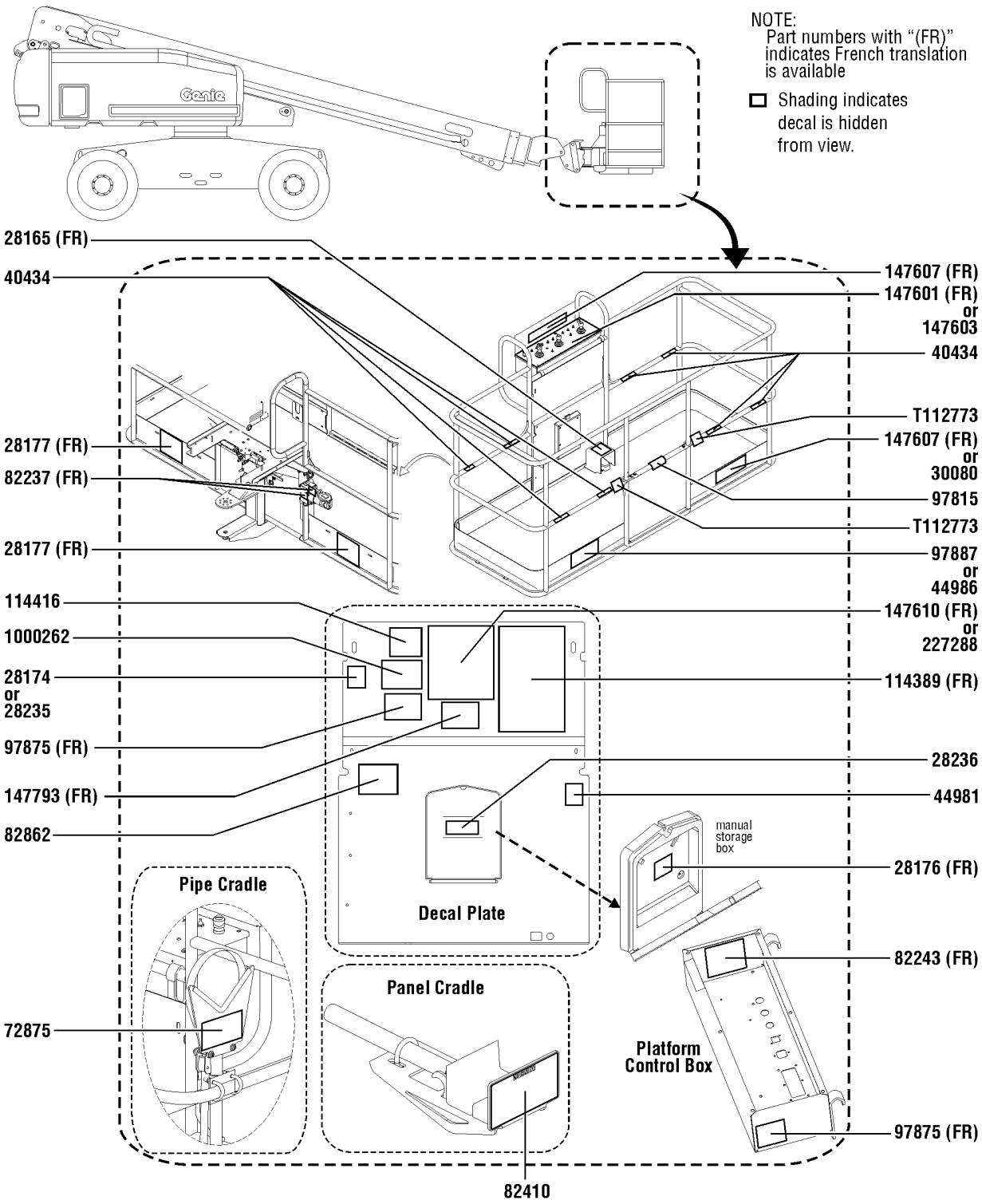

136.1 S-60TX Decals with Word, Platform (ANSI & Australia)

Item	Part No.	Description	Qty.
A	1251643GT	DECAL KIT,PLAT,S60/65 WRD,ANSI/AUS platform kit	
1	28165GT	DECAL,INSTRUCT,FOOTSWITCH OPER	1
2	28174GT	DECAL,POWER TO PLATFORM 230V	1
3	28176GT	DECAL,LABEL,MANUAL NOT HERE	1
4	28177GT	DECAL,WARN,CRUSH HAZARD PLAT	2
5	28235GT	DECAL,POWER TO PLATFORM 115V	1
6	28236GT	DECAL,WARN,IMPROPER OPERATION	1
7	30080GT	DECAL,NOTICE,MAX LOAD 500 LBS AUS only	1
8	40434GT	DECAL,LANYARD ANCHORAGE POINT	8
9	44981GT	DECAL,LABEL,AIRLINE 110 PSI Option, airline to plat	1
10	44986GT	DECAL,INSTR,SIDE FRC/WIND,AUS AUS only	1
11	72875GT	DECAL,WARNING,PIPE CRADLE,BOOM Option, pipe cradle	2
12	82237GT	DECAL,DANGER,HIGH VOLTAGE Option, welder	2
13	82243GT	DECAL FAULT CODE	1
14	82410GT	DECAL,WARNING,PANEL CRADLE Option, panel cradle	2
15	82862GT	DECAL,FIRE EXTINGUISHER Option, welder	1
16	97815GT	DECAL,LABEL,LOWER MIDRAIL	1
17	97875GT	DECAL,WARN.WELD LINE INST.WORD Option, weld cable line	2
18	97887GT	DECAL,INSTR,MAX SIDE FRC,ANSI ANSI only	1
19	114389GT	DECAL,DANGER,GENERAL SAFETY	1
20	114416GT	DECAL,DANGER,TIPOVER,TILT	1
21	147601GT	DECAL, PLAT CNTL PNL 60TX ANSI only	1
22	147603GT	DECAL, PLAT CNTL PNL AUS only	1
23	147607GT	DECAL,INST PLAT CAP 60TRAX ANSI only	2
24	147610GT	DECAL,INST,OPER INST 60TRAX ANSI only	1
25	147793GT	DECAL,DANGER,TIPOVR,MAX CAP ANSI only	1
26	227288GT	DECAL, OPERATING INSTRUCTIONS AUS only	1
27	1000262GT	DECAL,DANGER,TIP OVER,PLAT	1

136.1 S-60TX Decals with Word, Platform (ANSI & Australia)

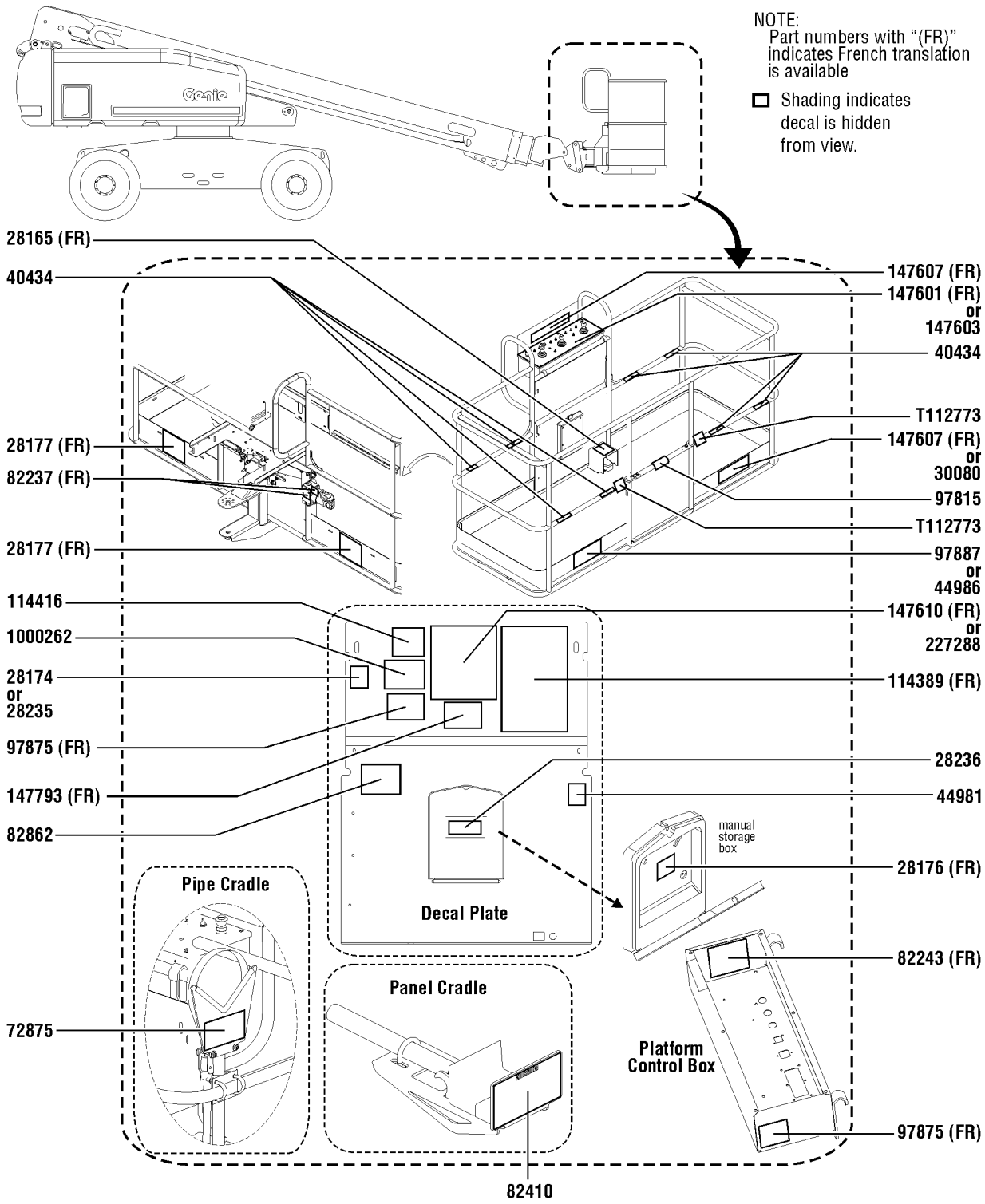

136.1 S-60TX Decals with Word, Platform (ANSI & Australia)

Item	*Part No.*	*Description*	*Qty.*
28	T112773GT	TAPE, PROTECTIVE MASK	2

137.1 S-60TX Decals with Symbol, Hydraulic Tank Side (ANSI & CE)

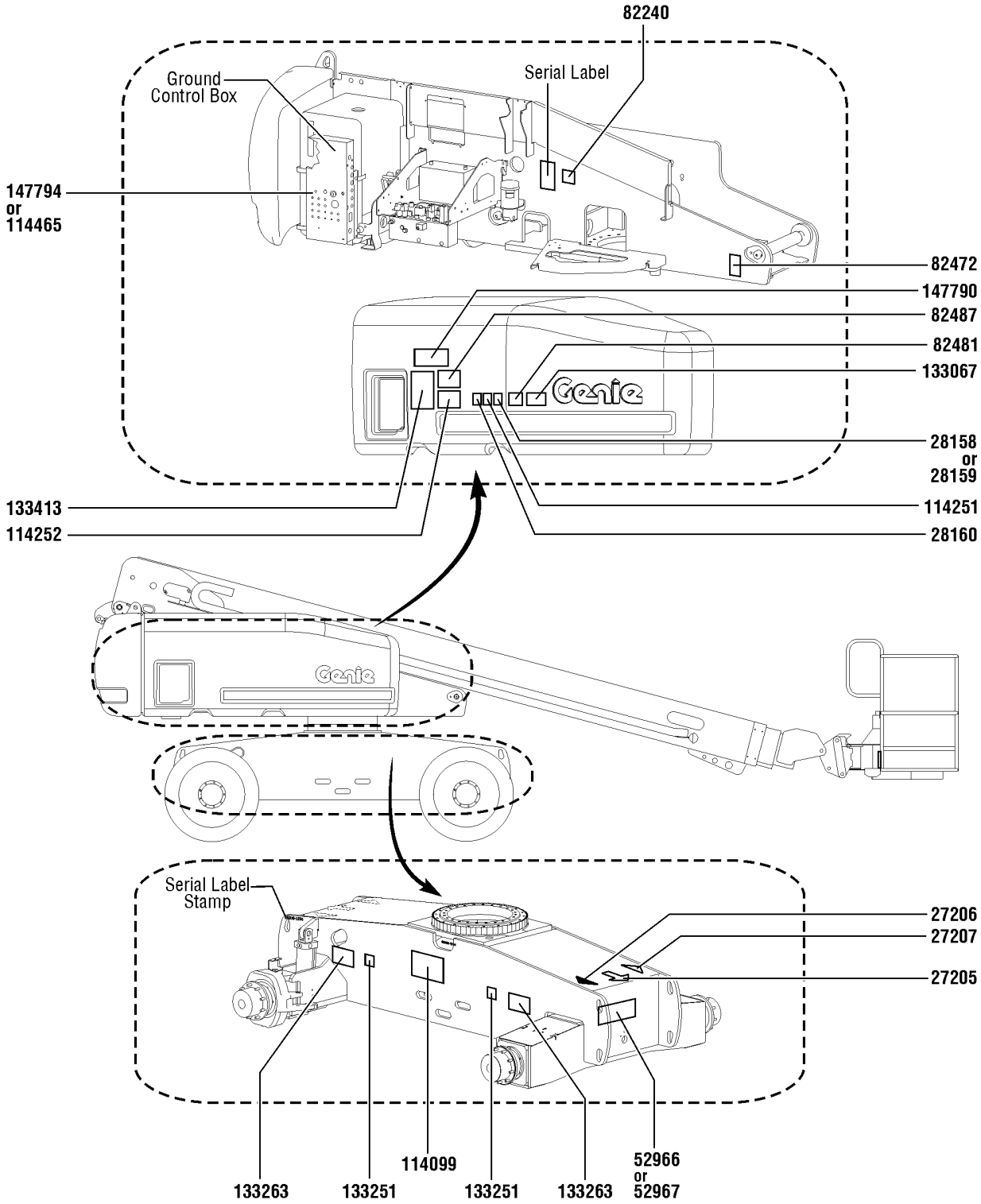

137.1 S-60TX Decals with Symbol, Hydraulic Tank Side (ANSI & CE)

Item	Part No.	Description	Qty.
1	27205GT	DECAL,ARROW YELLOW LRG 9"	1
2	27206GT	DECAL,TRIANGLE,BLUE	1
3	27207GT	DECAL,TRIANGLE,YELLOW	1
4	28158GT	DECAL,LABEL,UNLEADED GAS ONLY	1
5	28159GT	DECAL,DIESEL	1
6	28160GT	DECAL,LABEL,LIQUID PROPANE Option, LPG tank	1
7	52966GT	DECAL,COSMETIC,4 X 2	1
8	52967GT	DECAL,COSMETIC,4 X 4	1
9	82240GT	DECAL,LABEL,105 DB	1
10	82472GT	DECAL,WARNING,CRUSHING HAZARD	1
11	82481GT	DECAL,SYMBOL-BATTERY SAFETY	1
12	82487GT	DECAL,SYMBOL-READ THE MANUAL	1
13	114099GT	DECAL,LABEL,TRANSPORT DIAGRAM	1
14	114251GT	DECAL,LABEL,NO SMOKING,SYMB	1
15	114252GT	DECAL,LABEL,TIP OVER LMT SWTCH	1
16	114465GT	DECAL GROUND CONTROL BOX CE only	1
17	133067GT	DECAL,DANGER,ELEC.HAZ.STAY CLR	1
18	133251GT	DECAL, WHEEL LOAD S60TRAX	2
19	133263GT	DECAL,LABEL,TIPOVER,TRAX,SYMB	2
20	133413GT	DECAL,EMERGENCY LOWERING CE only	1
21	147790GT	DECAL,INST PLAT CAP 60TRAX SYM ANSI only	1
22	147794GT	DECAL,GR CNTL PNL 60TX ANSI only	1

138.1 S-60TX Decals with Symbol, Engine Side (ANSI & CE)

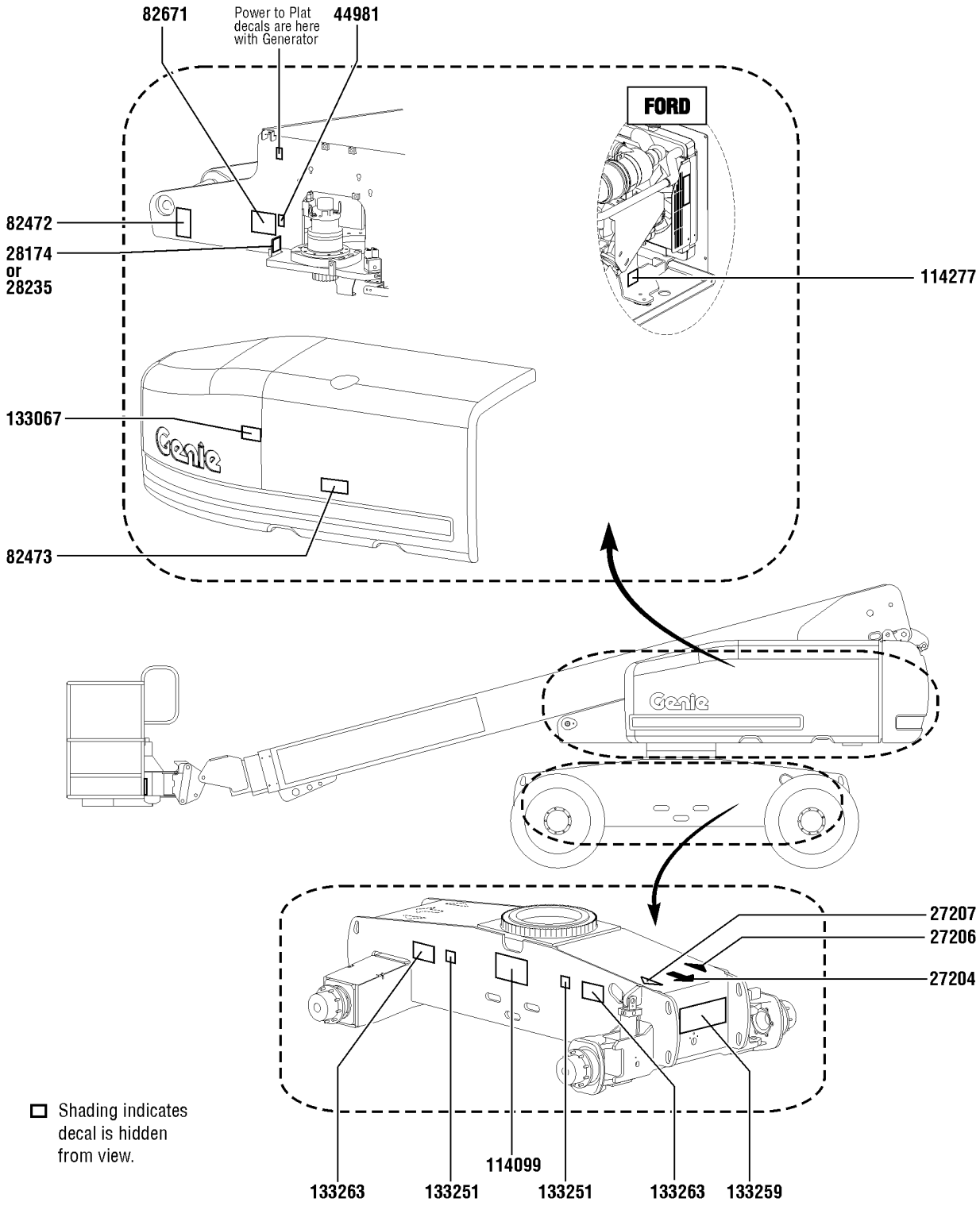

138.1 S-60TX Decals with Symbol, Engine Side (ANSI & CE)

Item	*Part No.*	*Description*	*Qty.*
1	27204GT	DECAL,ARROW BLUE	1
2	27206GT	DECAL,TRIANGLE,BLUE	1
3	27207GT	DECAL,TRIANGLE,YELLOW	1
4	28174GT	DECAL,POWER TO PLATFORM 230V	1
5	28235GT	DECAL,POWER TO PLATFORM 115V	1
6	44981GT	DECAL,LABEL,AIRLINE 110 PSI Option, airline to plat	1
7	82472GT	DECAL,WARNING,CRUSHING HAZARD	1
8	82473GT	DECAL,SYMBOL-COMP ACCESS	1
9	82671GT	DECAL,LABEL,WELD LINE INST,SYM Option, weld cable line	1
10	114099GT	DECAL,LABEL,TRANSPORT DIAGRAM	1
11	114277GT	DECAL,LABEL,BELT ROUTING DSG	1
12	133067GT	DECAL,DANGER,ELEC.HAZ.STAY CLR	1
13	133251GT	DECAL, WHEEL LOAD S60TRAX	2
14	133259GT	DECAL,COSM, S60 TRAX	1
15	133263GT	DECAL,LABEL,TIPOVER,TRAX,SYMB	2

139.1 S-60TX Decals with Symbol, Boom (ANSI & CE)

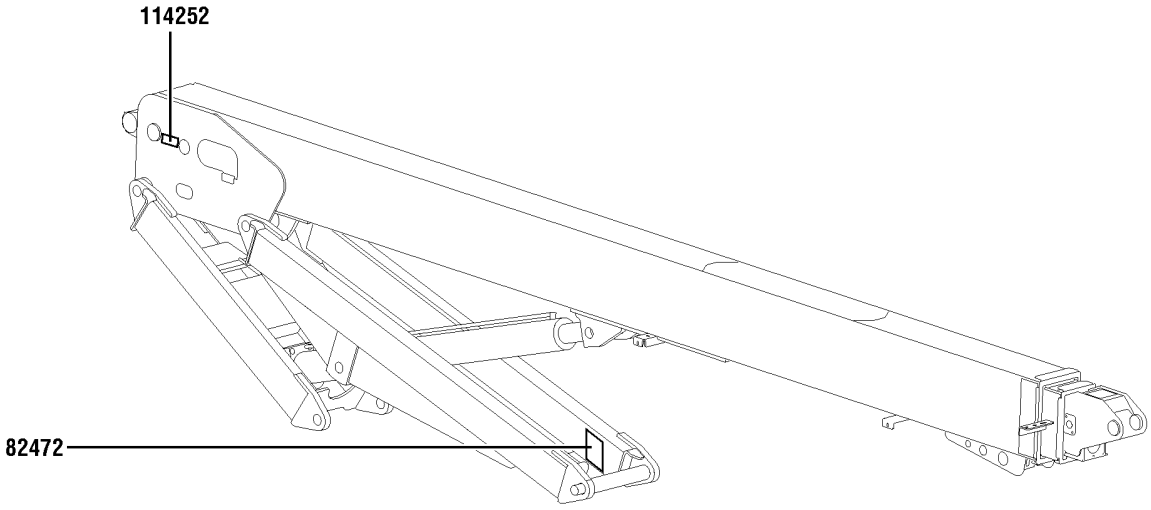

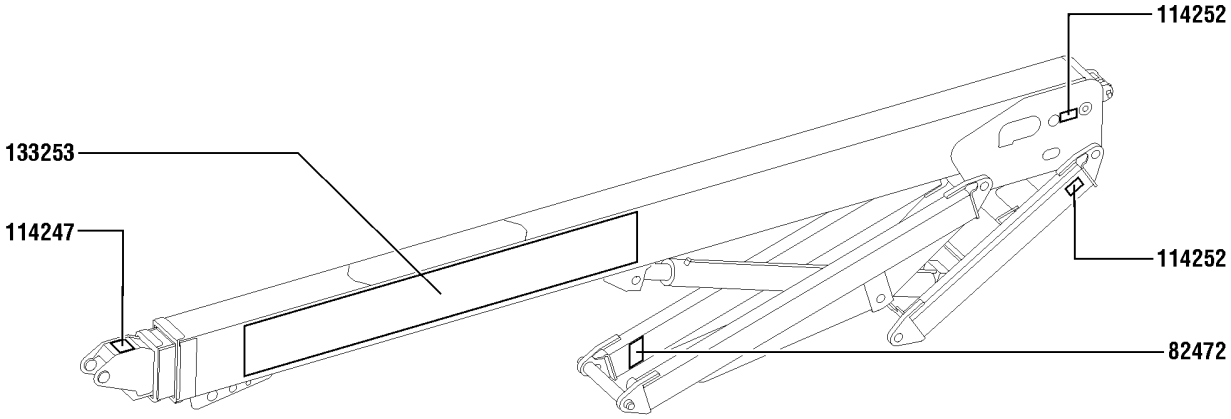

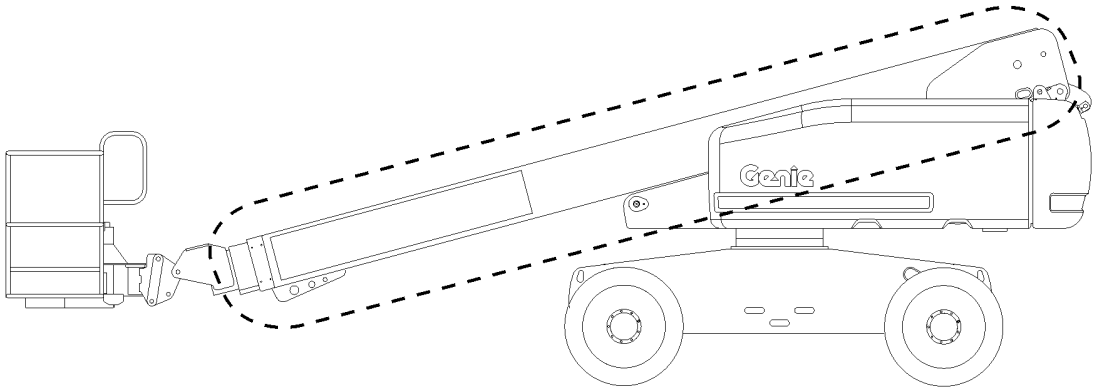

139.1 S-60TX Decals with Symbol, Boom (ANSI & CE)

Item	*Part No.*	*Description*	*Qty.*
A	1296264GT	DECAL KIT,S60/65 PLAT SYM,ANSI/CE platform kit	
1	82472GT	DECAL,WARNING,CRUSHING HAZARD	2
2	114247GT	DECAL,LABEL,FALL HAZARD***	1
3	114252GT	DECAL,LABEL,TIP OVER LMT SWTCH	3
4	133253GT	DECAL,COSM,GENIE S60 TRAX	1

140.1 S-60TX Decals with Symbol, Platform (ANSI & CE)

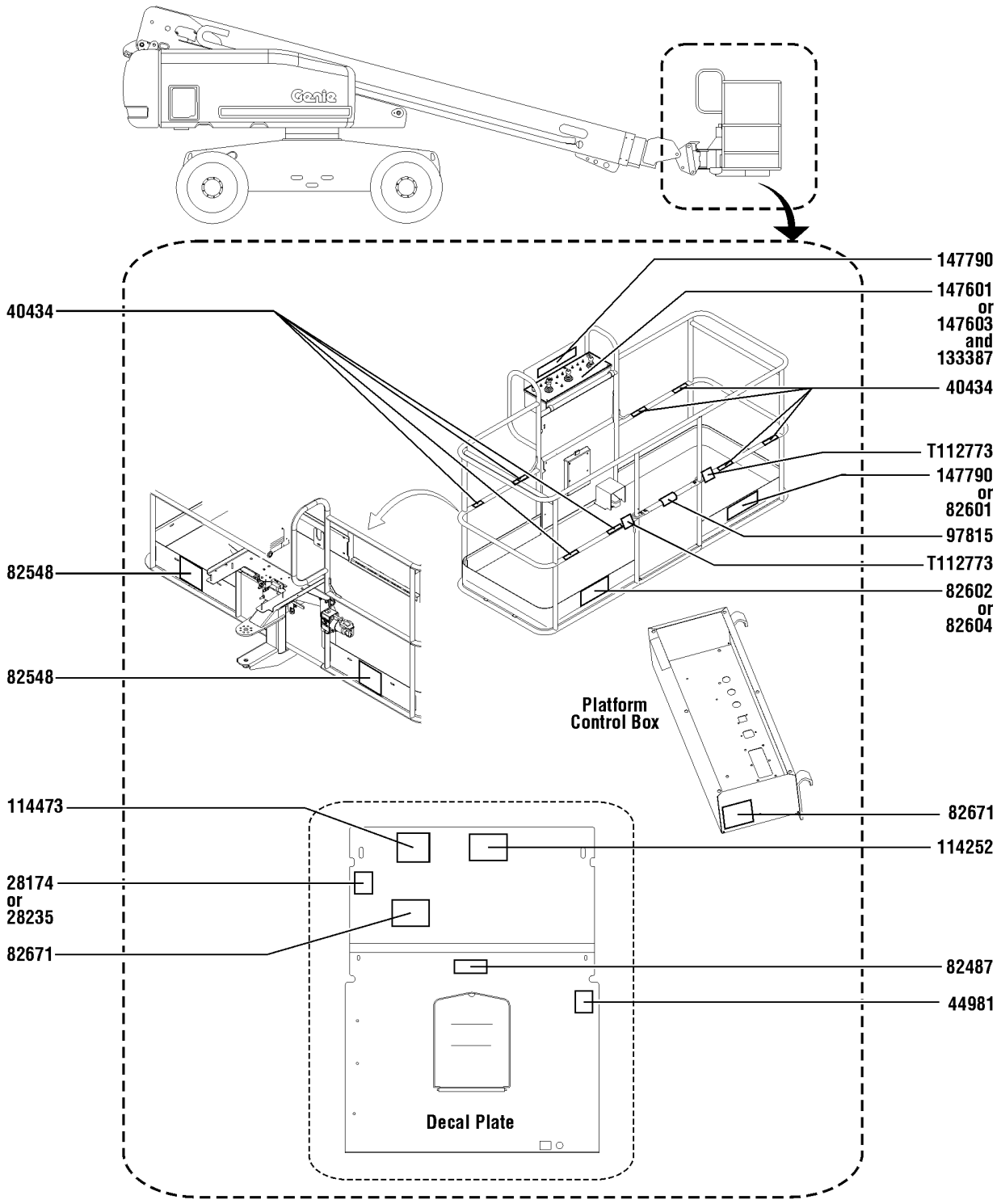

140.1 S-60TX Decals with Symbol, Platform (ANSI & CE)

Item	Part No.	Description	Qty.
1	28174GT	DECAL,POWER TO PLATFORM 230V	1
2	28235GT	DECAL,POWER TO PLATFORM 115V	1
3	40434GT	DECAL,LANYARD ANCHORAGE POINT	8
4	44981GT	DECAL,LABEL,AIRLINE 110 PSI Option, airline to plat	1
5	82487GT	DECAL,SYMBOL-READ THE MANUAL	1
6	82548GT	DECAL,WARN,CRUSH HAZARD PLAT	2
7	82601GT	DECAL,LABEL,MAX CAPACITY*** CE only	1
8	82602GT	DECAL,DANGER,MAX SIDE FRC,667N	1
9	82604GT	DECAL,DANGER,SIDE FRC 400N	1
10	82671GT	DECAL,LABEL,WELD LINE INST,SYM Option, weld cable line	2
11	97815GT	DECAL,LABEL,LOWER MIDRAIL	1
12	114252GT	DECAL,LABEL,TIP OVER LMT SWTCH	1
13	114473GT	DECAL,DANGER,TIPOVER,TILT,SYM	1
14	133387GT	DECAL,DRIVE ENABLE PATCH	1
15	147601GT	DECAL, PLAT CNTL PNL 60TX ANSI only	1
16	147603GT	DECAL, PLAT CNTL PNL CE only	1
17	147790GT	DECAL,INST PLAT CAP 60TRAX SYM ANSI only	2
18	T112773GT	TAPE, PROTECTIVE MASK	2

141.1 S-65TX Decals with Word, Hydraulic Tank Side (ANSI & Australia)

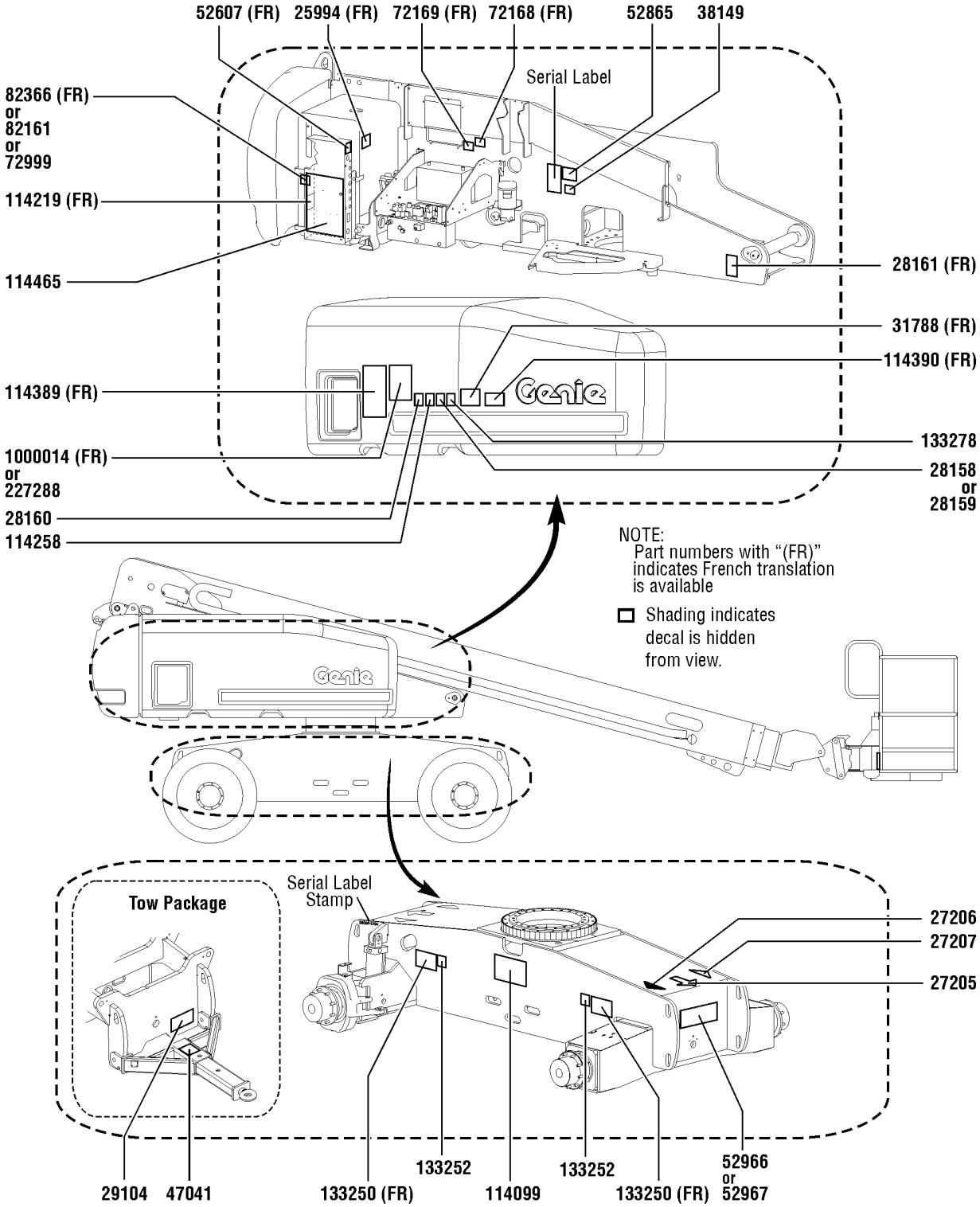

141.1 S-65TX Decals with Word, Hydraulic Tank Side (ANSI & Australia)

Item	Part No.	Description	Qty.
1	25994GT	DECAL,NOTICE,SHUTOFF VALVES	1
2	27205GT	DECAL,ARROW YELLOW LRG 9"	1
3	27206GT	DECAL,TRIANGLE,BLUE	1
4	27207GT	DECAL,TRIANGLE,YELLOW	1
5	28158GT	DECAL,LABEL,UNLEADED GAS ONLY	1
6	28159GT	DECAL,DIESEL	1
7	28160GT	DECAL,LABEL,LIQUID PROPANE Option, LPG tank	1
8	28161GT	DECAL,WARN,CRUSH HAZARD HAND	1
9	29104GT	DECAL,TOWING INSTRUCTIONS Option, tow package	1
10	31788GT	DECAL,DANGER,BATTERY SAFETY***	1
11	38149GT	DECAL,LABEL,PATENTS US only	1
12	47041GT	DECAL,CAUTION,TOWING SPEED Option, tow package	1
13	52607GT	DECAL,LABEL,TEST*** Ford only	1
14	52865GT	DECAL,ANNUAL INSP*** ANSI only	1
15	52966GT	DECAL,COSMETIC,4 X 2	1
16	52967GT	DECAL,COSMETIC,4 X 4	1
17	72168GT	DECAL,LABEL,STARTER BATTERY	1
18	72169GT	DECAL,LABEL,CONTROLS BATTERY	1
19	72999GT	DECAL,LABEL,PETRO CANADA***	1
20	82161GT	DECAL,LABEL,UCON HYDROLUBE	1
21	82366GT	DECAL,CHEVRON RANDO HD	1
22	114099GT	DECAL,LABEL,TRANSPORT DIAGRAM	1
23	114219GT	DECAL,LABEL,RELAYS,S60&65	1
24	114258GT	DECAL,DANGER,NO SMOKING	1
25	114389GT	DECAL,DANGER,GENERAL SAFETY	1
26	114390GT	DECAL,DANGER,ELECT HAZARD***	1
27	114465GT	DECAL GROUND CONTROL BOX	1
28	133250GT	DECAL,DANGER TIP OVER TRAX	2

141.1 S-65TX Decals with Word, Hydraulic Tank Side (ANSI & Australia)

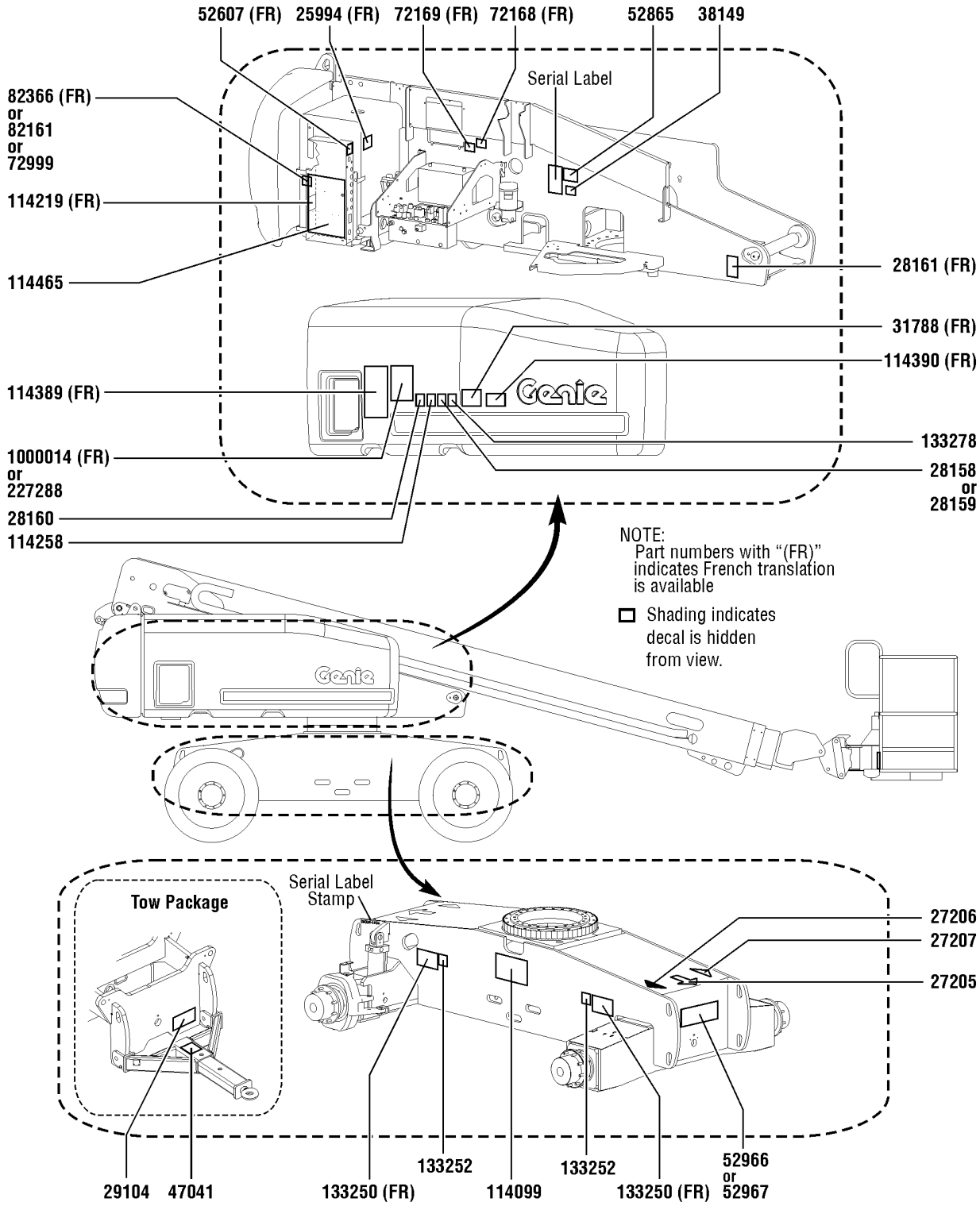

141.1 S-65TX Decals with Word, Hydraulic Tank Side (ANSI & Australia)

Item	*Part No.*	*Description*	*Qty.*
29	133252GT	DECAL, WHEEL LOAD S65 TRAX	2
30	133278GT	DECAL,LOW/ULTRA LOW SULFR FUEL Diesel models only	1
31	227288GT	DECAL, OPERATING INSTRUCTIONS	1
32	1000014GT	DECAL,NOTICE,OPER INST.S60	1

142.1 S-65TX Decals with Word, Engine Side (ANSI & Australia)

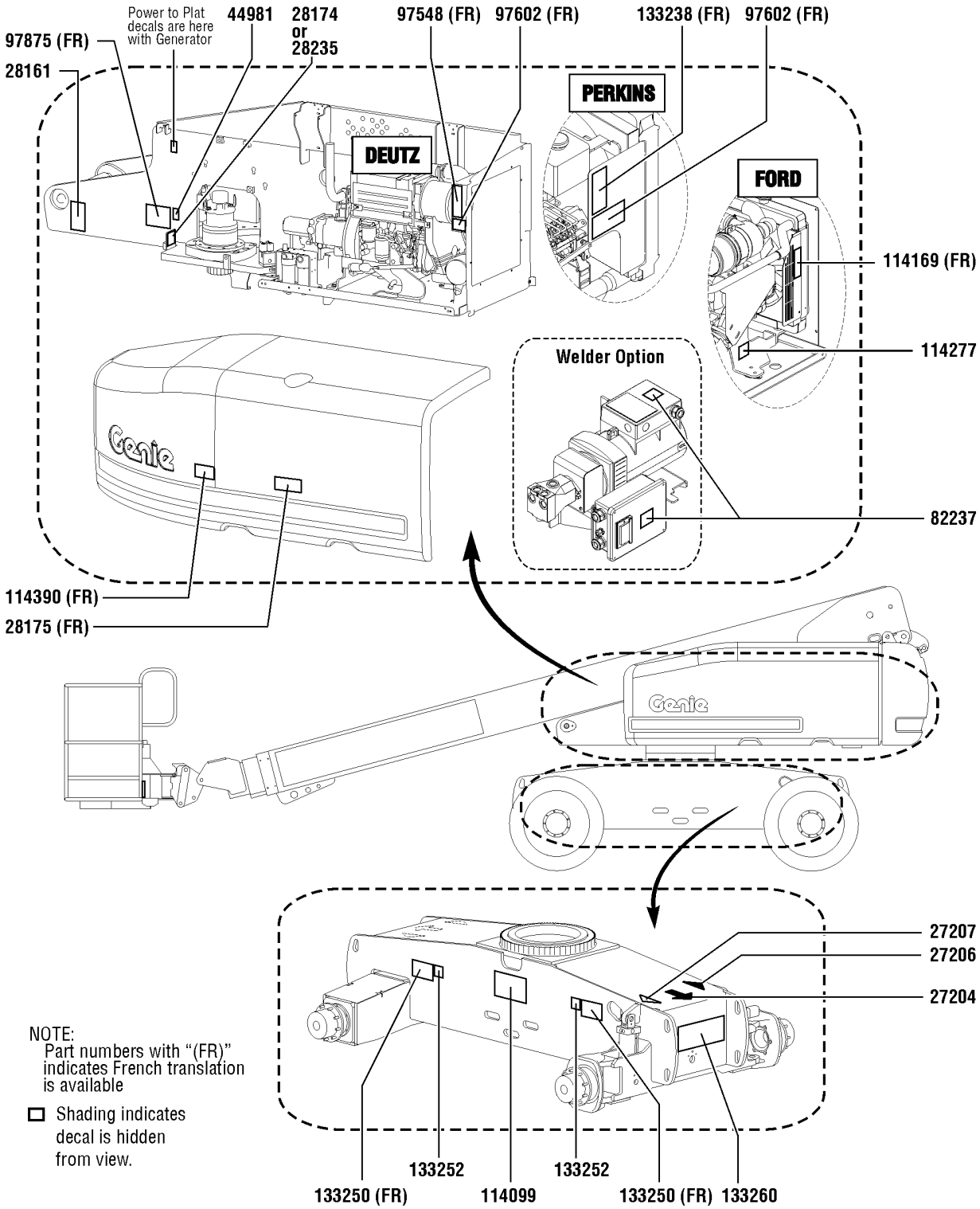

142.1 S-65TX Decals with Word, Engine Side (ANSI & Australia)

Item	*Part No.*	*Description*	*Qty.*
1	27204GT	DECAL,ARROW BLUE	1
2	27206GT	DECAL,TRIANGLE,BLUE	1
3	27207GT	DECAL,TRIANGLE,YELLOW	1
4	28161GT	DECAL,WARN,CRUSH HAZARD HAND	1
5	28174GT	DECAL,POWER TO PLATFORM 230V	1
6	28175GT	DECAL,WARNING-COMPART ACCESS	1
7	28235GT	DECAL,POWER TO PLATFORM 115V	1
8	44981GT	DECAL,LABEL,AIRLINE 110 PSI Option, airline to plat	1
9	82237GT	DECAL,DANGER,HIGH VOLTAGE Option, welder	2
10	97548GT	DECAL,ENGINE SPEC,DEUTZ 2011	1
11	97602GT	DECAL,EXPLOSION HAZARD	1
12	97875GT	DECAL,WARN.WELD LINE INST.WORD Option, weld cable line	1
13	114099GT	DECAL,LABEL,TRANSPORT DIAGRAM	1
14	114169GT	DECAL,FORD ENGINE SPEC DSG423	1
15	114277GT	DECAL,LABEL,BELT ROUTING DSG	1
16	114390GT	DECAL,DANGER,ELECT HAZARD***	1
17	133238GT	DECAL,ENGINE SPEC,PERKINS***	1
18	133250GT	DECAL,DANGER TIP OVER TRAX	2
19	133252GT	DECAL, WHEEL LOAD S65 TRAX	2
20	133260GT	DECAL,COSM, S65 TRAX	1

143.1 S-65TX Decals with Word, Boom (ANSI & Australia)

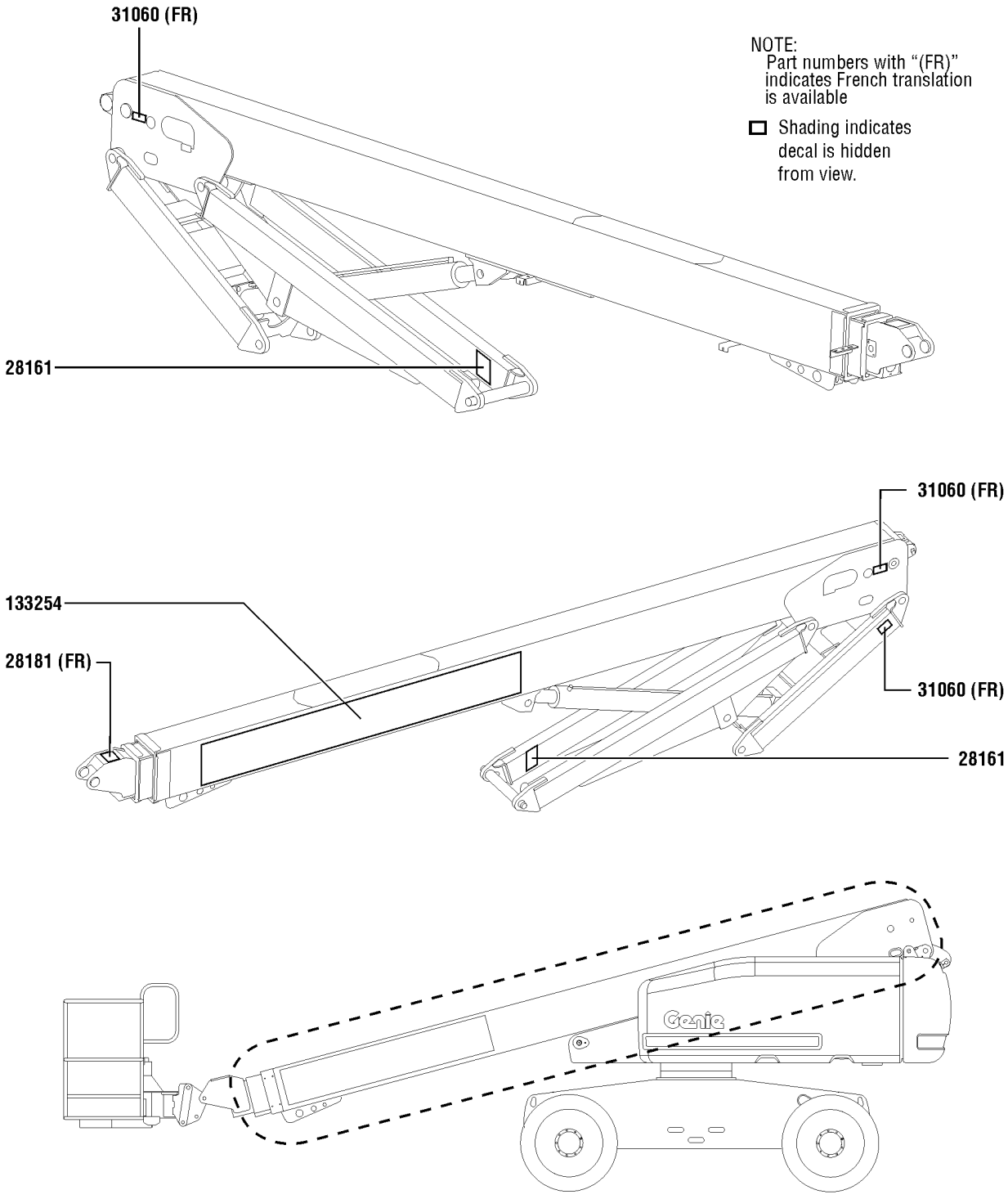

143.1 S-65TX Decals with Word, Boom (ANSI & Australia)

Item	*Part No.*	*Description*	*Qty.*
A	1251643GT	DECAL KIT,PLAT,S60/65 WRD,ANSI/AUS platform kit	
1	28161GT	DECAL,WARN,CRUSH HAZARD HAND	2
2	28181GT	DECAL,WARN,FALL HAZARD	1
3	31060GT	DECAL,DANGER DO NOT ALTER SWTC	3
4	133254GT	DECAL, COSM,GENIE S65 TRAX	1

144.1 S-65TX Decals with Word, Platform (ANSI & Australia)

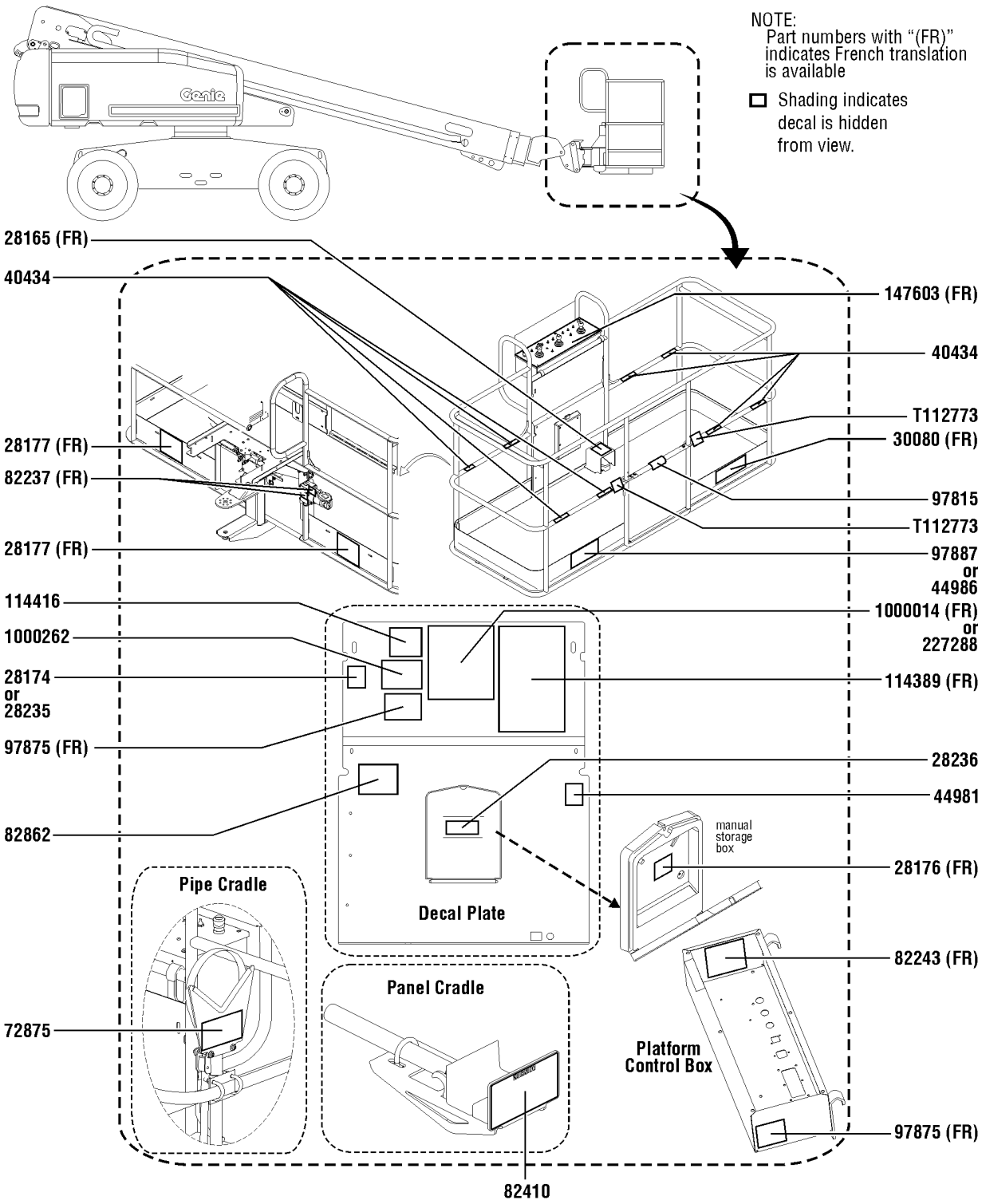

144.1 S-65TX Decals with Word, Platform (ANSI & Australia)

Item	Part No.	Description	Qty.
1	28165GT	DECAL,INSTRUCT,FOOTSWITCH OPER	1
2	28174GT	DECAL,POWER TO PLATFORM 230V	1
3	28176GT	DECAL,LABEL,MANUAL NOT HERE	1
4	28177GT	DECAL,WARN,CRUSH HAZARD PLAT	2
5	28235GT	DECAL,POWER TO PLATFORM 115V	1
6	28236GT	DECAL,WARN,IMPROPER OPERATION	1
7	30080GT	DECAL,NOTICE,MAX LOAD 500 LBS	1
8	40434GT	DECAL,LANYARD ANCHORAGE POINT	8
9	44981GT	DECAL,LABEL,AIRLINE 110 PSI Option, airline to plat	1
10	44986GT	DECAL,INSTR,SIDE FRC/WIND,AUS AUS only	1
11	72875GT	DECAL,WARNING,PIPE CRADLE,BOOM Option, pipe cradle	2
12	82237GT	DECAL,DANGER,HIGH VOLTAGE Option, welder	2
13	82243GT	DECAL FAULT CODE	1
14	82410GT	DECAL,WARNING,PANEL CRADLE Option, panel cradle	2
15	82862GT	DECAL,FIRE EXTINGUISHER Option, welder	1
16	97815GT	DECAL,LABEL,LOWER MIDRAIL	1
17	97875GT	DECAL,WARN.WELD LINE INST.WORD Option, weld cable line	2
18	97887GT	DECAL,INSTR,MAX SIDE FRC,ANSI ANSI only	1
19	114389GT	DECAL,DANGER,GENERAL SAFETY	1
20	114416GT	DECAL,DANGER,TIPOVER,TILT	1
21	147603GT	DECAL, PLAT CNTL PNL	1
22	227288GT	DECAL, OPERATING INSTRUCTIONS AUS only	1
23	1000014GT	DECAL,NOTICE,OPER INST.S60 ANSI only	1
24	1000262GT	DECAL,DANGER,TIP OVER,PLAT	1
25	T112773GT	TAPE, PROTECTIVE MASK	2

145.1 S-65TX Decals with Symbol, Hydraulic Tank Side (ANSI & CE)

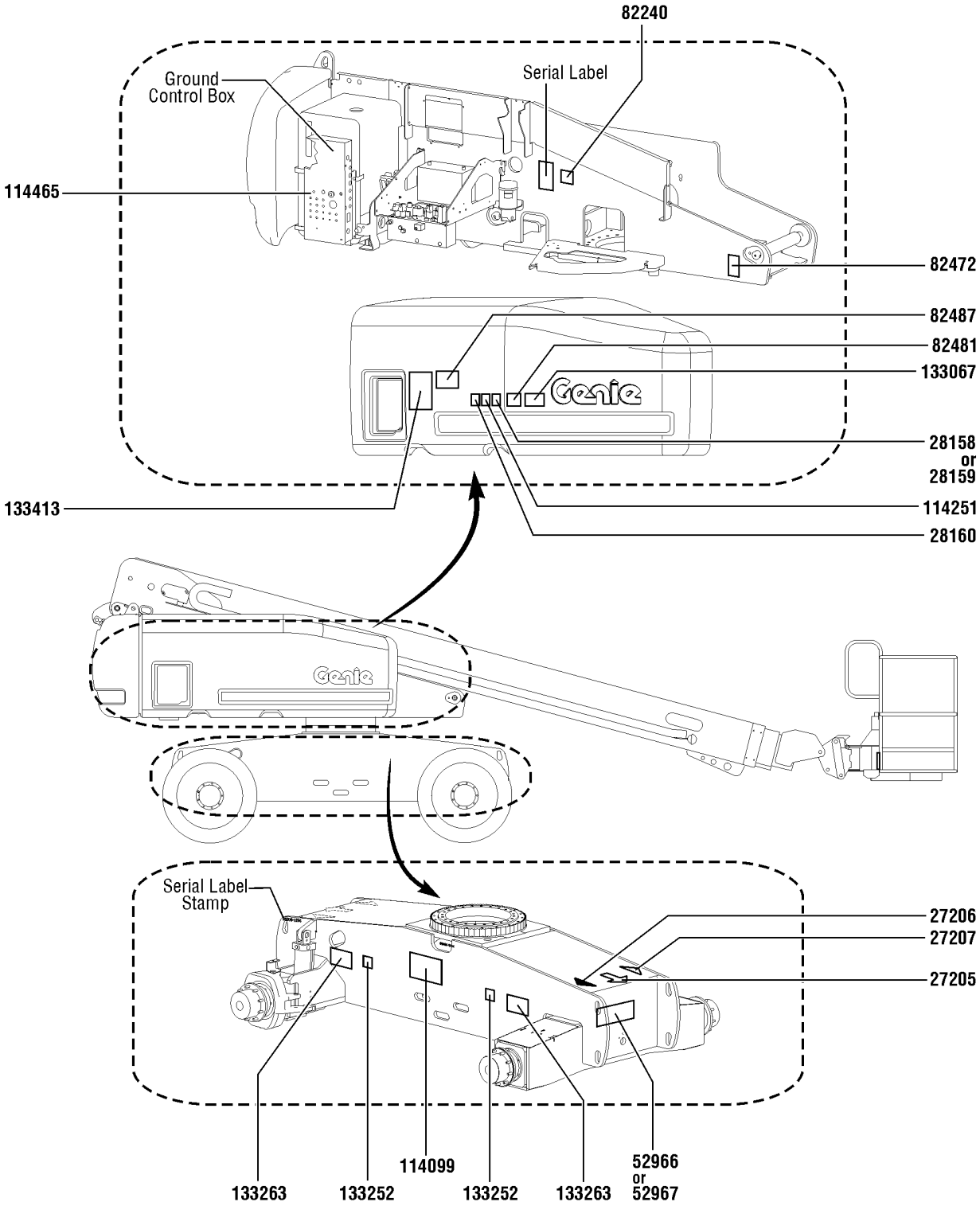

145.1 S-65TX Decals with Symbol, Hydraulic Tank Side (ANSI & CE)

Item	*Part No.*	*Description*	*Qty.*
1	27205GT	DECAL,ARROW YELLOW LRG 9"	1
2	27206GT	DECAL,TRIANGLE,BLUE	1
3	27207GT	DECAL,TRIANGLE,YELLOW	1
4	28158GT	DECAL,LABEL,UNLEADED GAS ONLY	1
5	28159GT	DECAL,DIESEL	1
6	28160GT	DECAL,LABEL,LIQUID PROPANE	1
7	52966GT	DECAL,COSMETIC,4 X 2	1
8	52967GT	DECAL,COSMETIC,4 X 4	1
9	82240GT	DECAL,LABEL,105 DB	1
10	82472GT	DECAL,WARNING,CRUSHING HAZARD	1
11	82481GT	DECAL,SYMBOL-BATTERY SAFETY	1
12	82487GT	DECAL,SYMBOL-READ THE MANUAL	1
13	114099GT	DECAL,LABEL,TRANSPORT DIAGRAM	1
14	114251GT	DECAL,LABEL,NO SMOKING,SYMB	1
15	114465GT	DECAL GROUND CONTROL BOX	1
16	133067GT	DECAL,DANGER,ELEC.HAZ.STAY CLR	1
17	133252GT	DECAL, WHEEL LOAD S65 TRAX	2
18	133263GT	DECAL,LABEL,TIPOVER,TRAX,SYMB	2
19	133413GT	DECAL,EMERGENCY LOWERING	1

146.1 S-65TX Decals with Symbol, Engine Side (ANSI & CE)

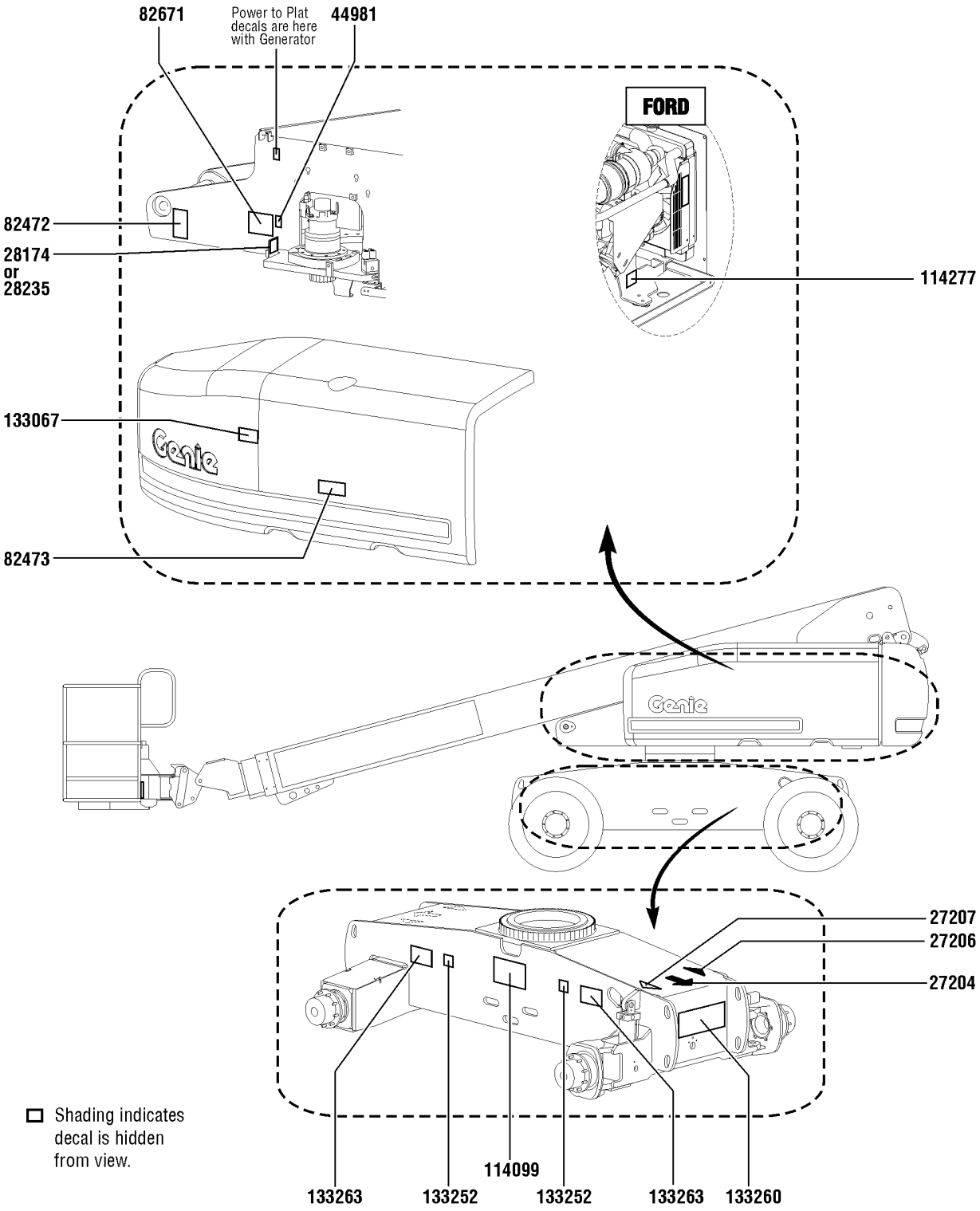

146.1 S-65TX Decals with Symbol, Engine Side (ANSI & CE)

Item	*Part No.*	*Description*	*Qty.*
1	27204GT	DECAL,ARROW BLUE	1
2	27206GT	DECAL,TRIANGLE,BLUE	1
3	27207GT	DECAL,TRIANGLE,YELLOW	1
4	28174GT	DECAL,POWER TO PLATFORM 230V	1
5	28235GT	DECAL,POWER TO PLATFORM 115V	1
6	44981GT	DECAL,LABEL,AIRLINE 110 PSI Option, airline to plat	1
7	82472GT	DECAL,WARNING,CRUSHING HAZARD	1
8	82473GT	DECAL,SYMBOL-COMP ACCESS	1
9	82671GT	DECAL,LABEL,WELD LINE INST,SYM Option, weld cable line	1
10	114099GT	DECAL,LABEL,TRANSPORT DIAGRAM	1
11	114277GT	DECAL,LABEL,BELT ROUTING DSG	1
12	133067GT	DECAL,DANGER,ELEC.HAZ.STAY CLR	1
13	133252GT	DECAL, WHEEL LOAD S65 TRAX	2
14	133260GT	DECAL,COSM, S65 TRAX	1
15	133263GT	DECAL,LABEL,TIPOVER,TRAX,SYMB	2

147.1 S-65TX Decals with Symbol, Boom (ANSI & CE)

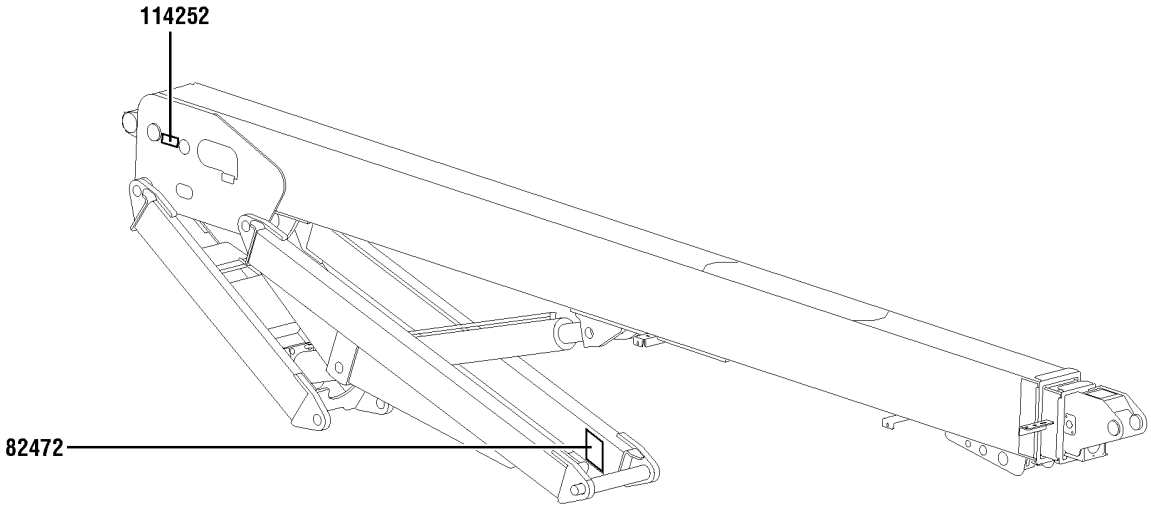

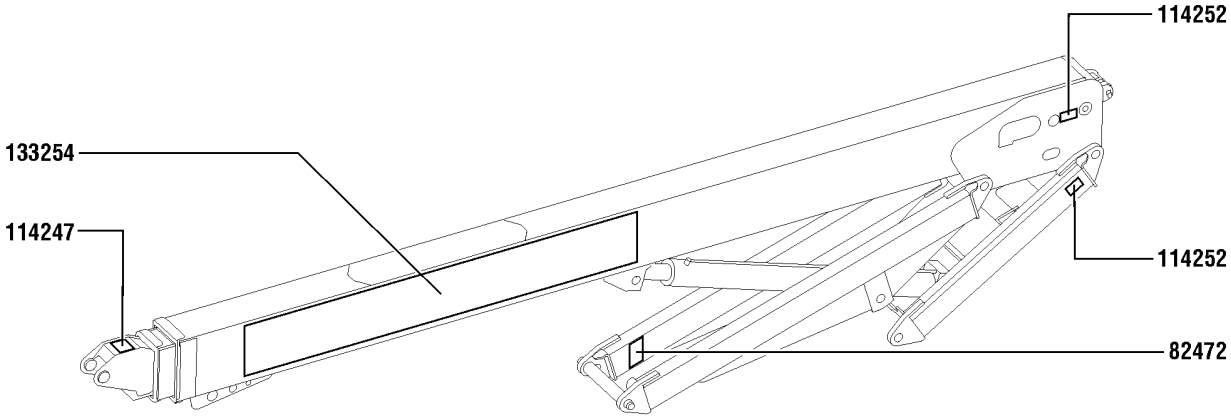

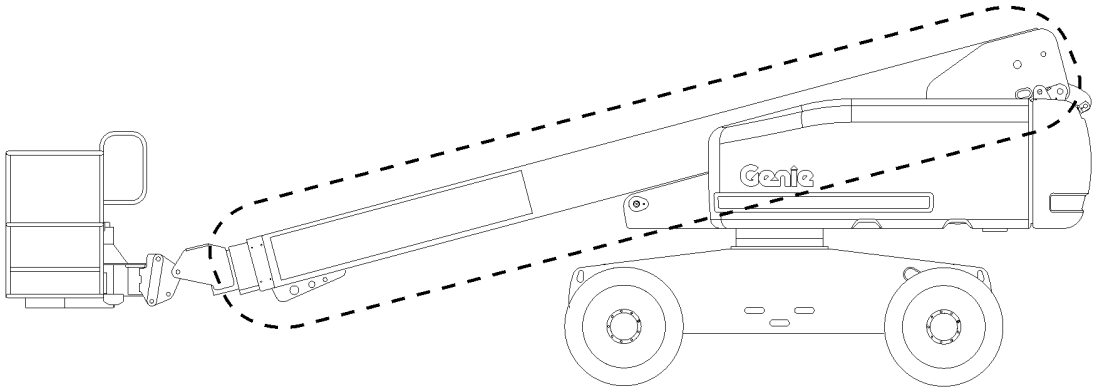

147.1 S-65TX Decals with Symbol, Boom (ANSI & CE)

Item	*Part No.*	*Description*	*Qty.*
1	82472GT	DECAL,WARNING,CRUSHING HAZARD	2
2	114247GT	DECAL,LABEL,FALL HAZARD***	1
3	114252GT	DECAL,LABEL,TIP OVER LMT SWTCH	3
4	133254GT	DECAL, COSM,GENIE S65 TRAX	1

148.1 S-65TX Decals with Symbol, Platform (ANSI & CE)

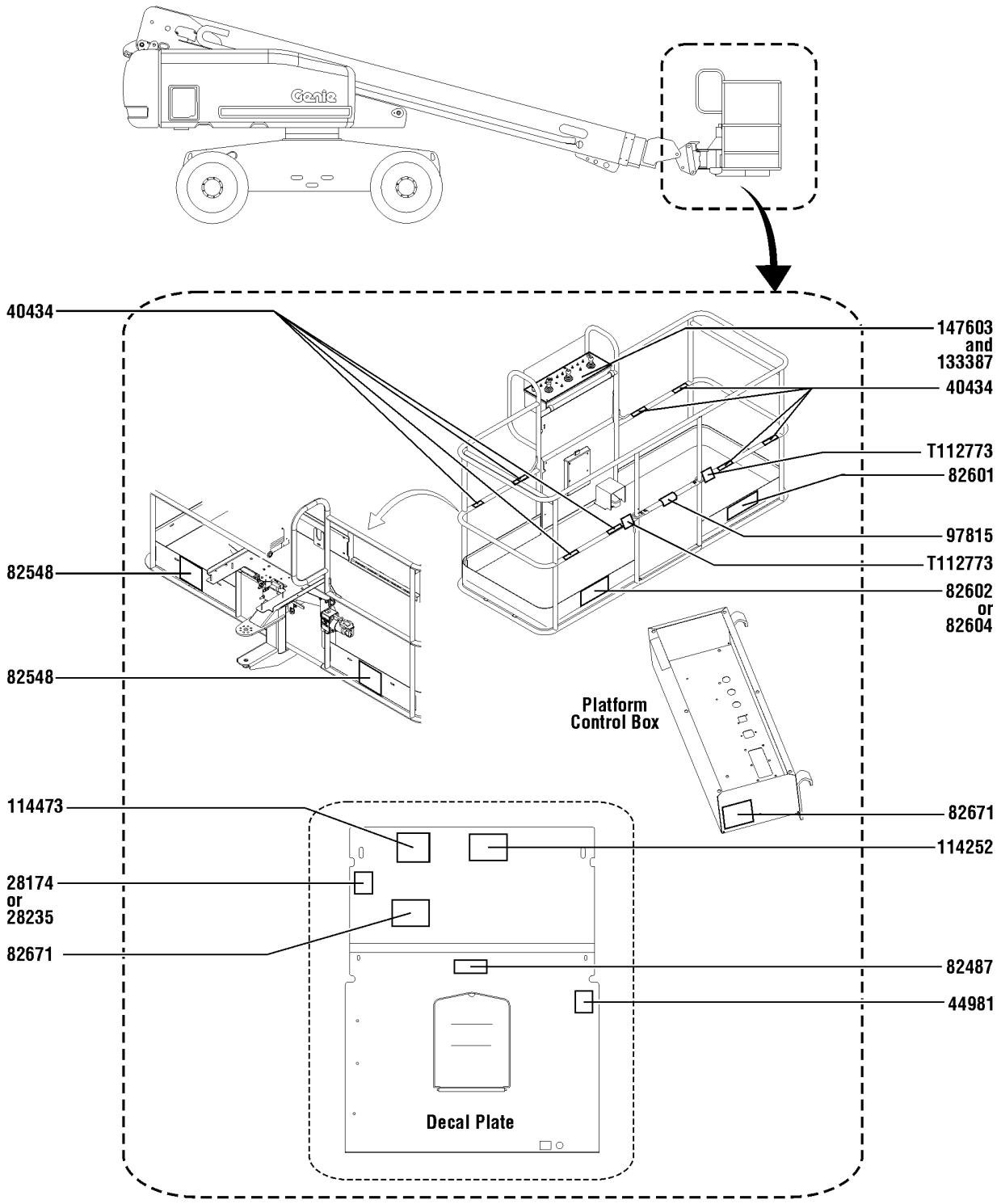

148.1 S-65TX Decals with Symbol, Platform (ANSI & CE)

Item	*Part No.*	*Description*	*Qty.*
A	1296264GT	DECAL KIT,S60/65 PLAT SYM,ANSI/CE platform kit	
1	28174GT	DECAL,POWER TO PLATFORM 230V	1
2	28235GT	DECAL,POWER TO PLATFORM 115V	1
3	40434GT	DECAL,LANYARD ANCHORAGE POINT	8
4	44981GT	DECAL,LABEL,AIRLINE 110 PSI Option, airline to plat	1
5	82487GT	DECAL,SYMBOL-READ THE MANUAL	1
6	82548GT	DECAL,WARN,CRUSH HAZARD PLAT	2
7	82601GT	DECAL,LABEL,MAX CAPACITY***	1
8	82602GT	DECAL,DANGER,MAX SIDE FRC,667N ANSI only	1
9	82604GT	DECAL,DANGER,SIDE FRC 400N CE only	1
10	82671GT	DECAL,LABEL,WELD LINE INST,SYM Option, weld cable line	2
11	97815GT	DECAL,LABEL,LOWER MIDRAIL	1
12	114252GT	DECAL,LABEL,TIP OVER LMT SWTCH	1
13	114473GT	DECAL,DANGER,TIPOVER,TILT,SYM	1
14	133387GT	DECAL,DRIVE ENABLE PATCH	1
15	147603GT	DECAL, PLAT CNTL PNL	1
16	T112773GT	TAPE, PROTECTIVE MASK	2

149.1S-60HC Decals with Symbol, Hydraulic Tank Side (CE)

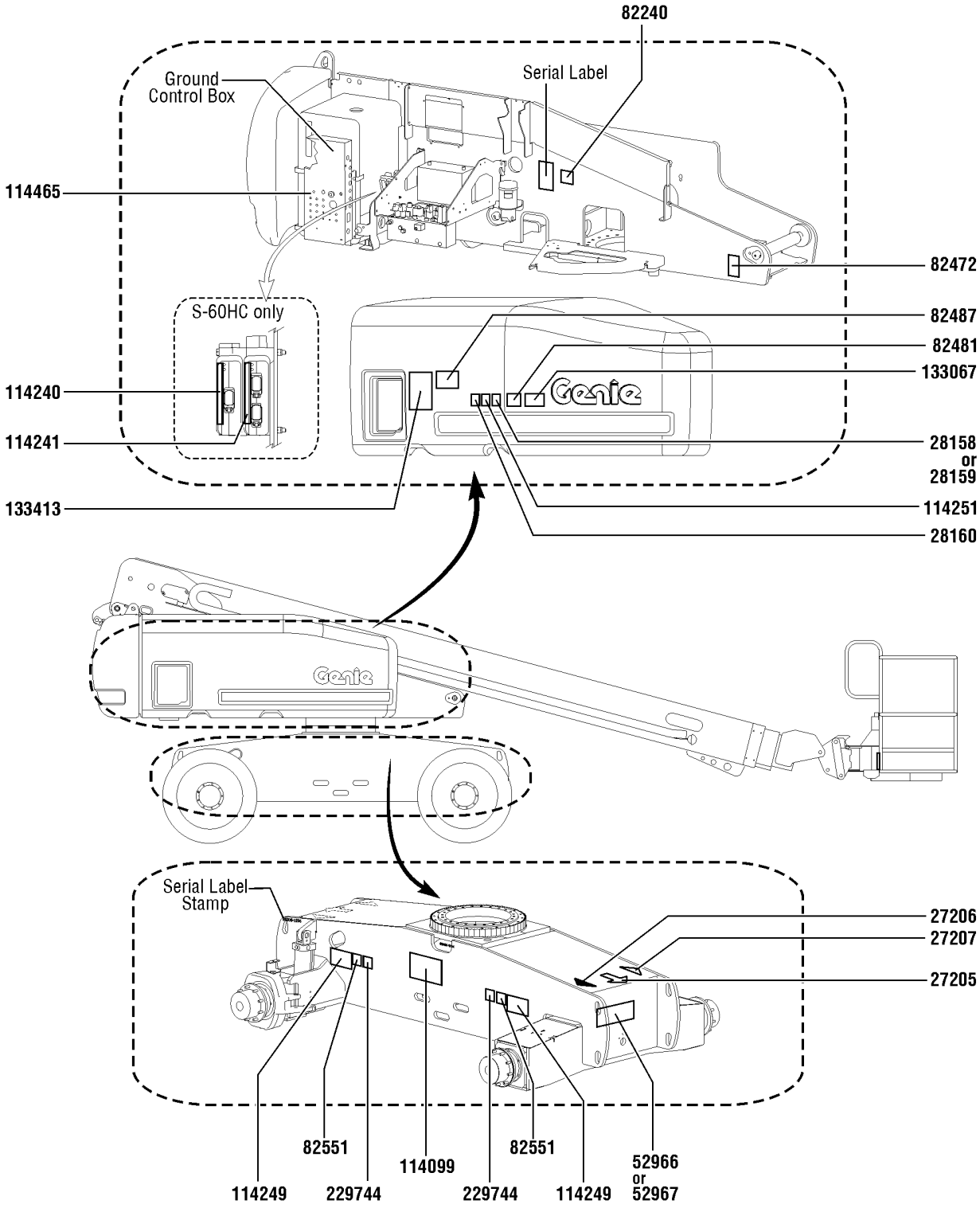

149.1S-60HC Decals with Symbol, Hydraulic Tank Side (CE)

Item	Part No.	Description	Qty.
1	27205GT	DECAL,ARROW YELLOW LRG 9"	1
2	27206GT	DECAL,TRIANGLE,BLUE	1
3	27207GT	DECAL,TRIANGLE,YELLOW	1
4	28158GT	DECAL,LABEL,UNLEADED GAS ONLY	1
5	28159GT	DECAL,DIESEL	1
6	28160GT	DECAL,LABEL,LIQUID PROPANE Option, LPG tank	1
7	52966GT	DECAL,COSMETIC,4 X 2	1
8	52967GT	DECAL,COSMETIC,4 X 4	1
9	82240GT	DECAL,LABEL,105 DB	1
10	82472GT	DECAL,WARNING,CRUSHING HAZARD	1
11	82481GT	DECAL,SYMBOL-BATTERY SAFETY	1
12	82487GT	DECAL,SYMBOL-READ THE MANUAL	1
13	82551GT	DECAL,LABEL,TIRE PRESSURE	2
14	114099GT	DECAL,LABEL,TRANSPORT DIAGRAM	1
15	114240GT	LABEL,TCON SOFTWARE,S60HC	1
16	114241GT	LABEL,SCON SOFTWARE,S60HC	1
17	114249GT	DECAL,LABEL,TIPOVER,TIRES,SYMB	2
18	114251GT	DECAL,LABEL,NO SMOKING,SYMB	1
19	114465GT	DECAL GROUND CONTROL BOX	1
20	133067GT	DECAL,DANGER,ELEC.HAZ.STAY CLR	1
21	133413GT	DECAL,EMERGENCY LOWERING	1
22	229744GT	DECAL,LABEL,WHEEL LOAD S60H/XC	2

150.1 S-60HC Decals with Symbol, Engine Side (CE)

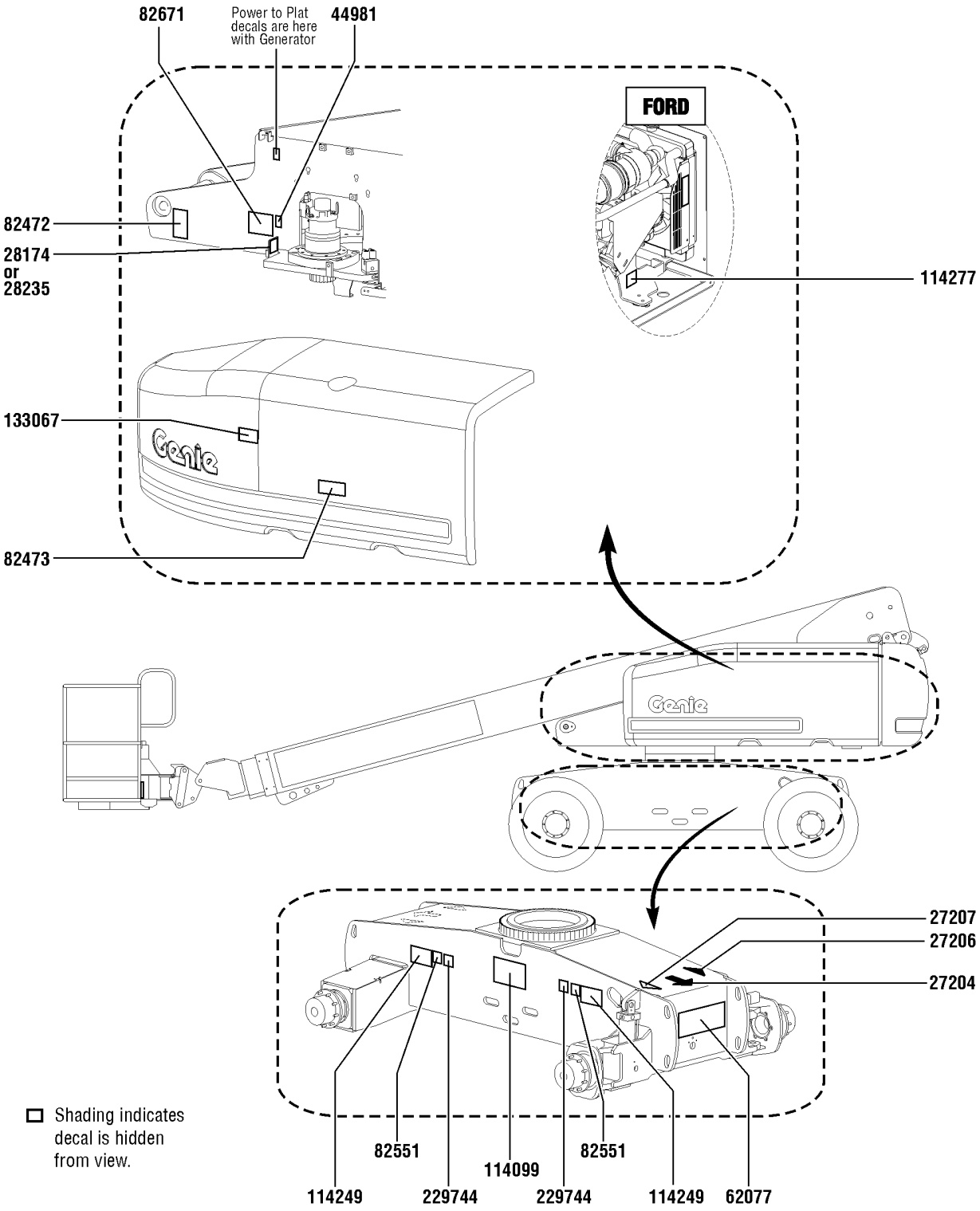

150.1 S-60HC Decals with Symbol, Engine Side (CE)

Item	*Part No.*	*Description*	*Qty.*
1	27204GT	DECAL,ARROW BLUE	1
2	27206GT	DECAL,TRIANGLE,BLUE	1
3	27207GT	DECAL,TRIANGLE,YELLOW	1
4	28174GT	DECAL,POWER TO PLATFORM 230V	1
5	28235GT	DECAL,POWER TO PLATFORM 115V	1
6	44981GT	DECAL,LABEL,AIRLINE 110 PSI Option, airline to plat	1
7	62077GT	DECAL,COSMETIC,S60	1
8	82472GT	DECAL,WARNING,CRUSHING HAZARD	1
9	82473GT	DECAL,SYMBOL-COMP ACCESS	1
10	82551GT	DECAL,LABEL,TIRE PRESSURE	2
11	82671GT	DECAL,LABEL,WELD LINE INST,SYM Option, weld cable line	1
12	114099GT	DECAL,LABEL,TRANSPORT DIAGRAM	1
13	114249GT	DECAL,LABEL,TIPOVER,TIRES,SYMB	2
14	114277GT	DECAL,LABEL,BELT ROUTING DSG	1
15	133067GT	DECAL,DANGER,ELEC.HAZ.STAY CLR	1
16	229744GT	DECAL,LABEL,WHEEL LOAD S60H/XC	1

151.1 S-60HC Decals with Symbol, Boom (CE)

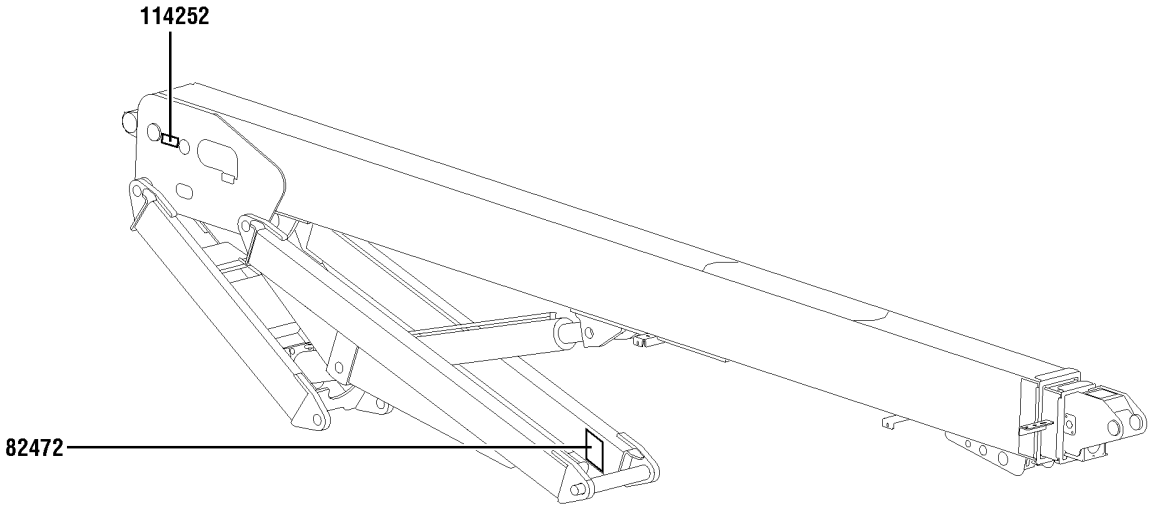

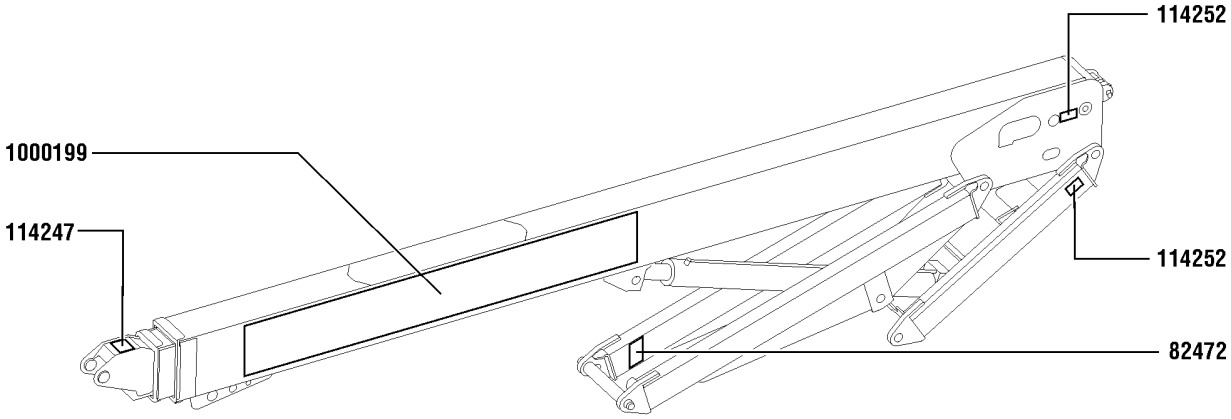

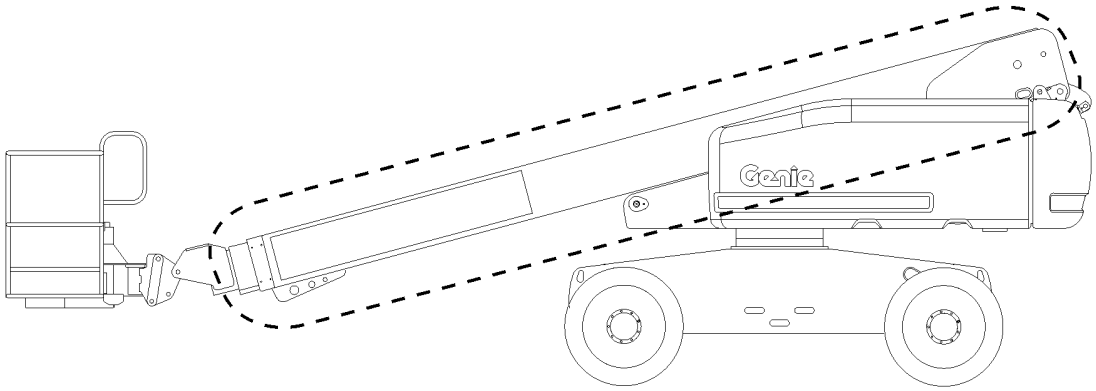

151.1 S-60HC Decals with Symbol, Boom (CE)

Item	*Part No.*	*Description*	*Qty.*
1	82472GT	DECAL,WARNING,CRUSHING HAZARD	2
2	114247GT	DECAL,LABEL,FALL HAZARD***	1
3	114252GT	DECAL,LABEL,TIP OVER LMT SWTCH	3
4	1000199GT	DECAL,COSMETIC,GENIE S-60HC	1

152.1 S-60HC Decals with Symbol, Platform (CE)

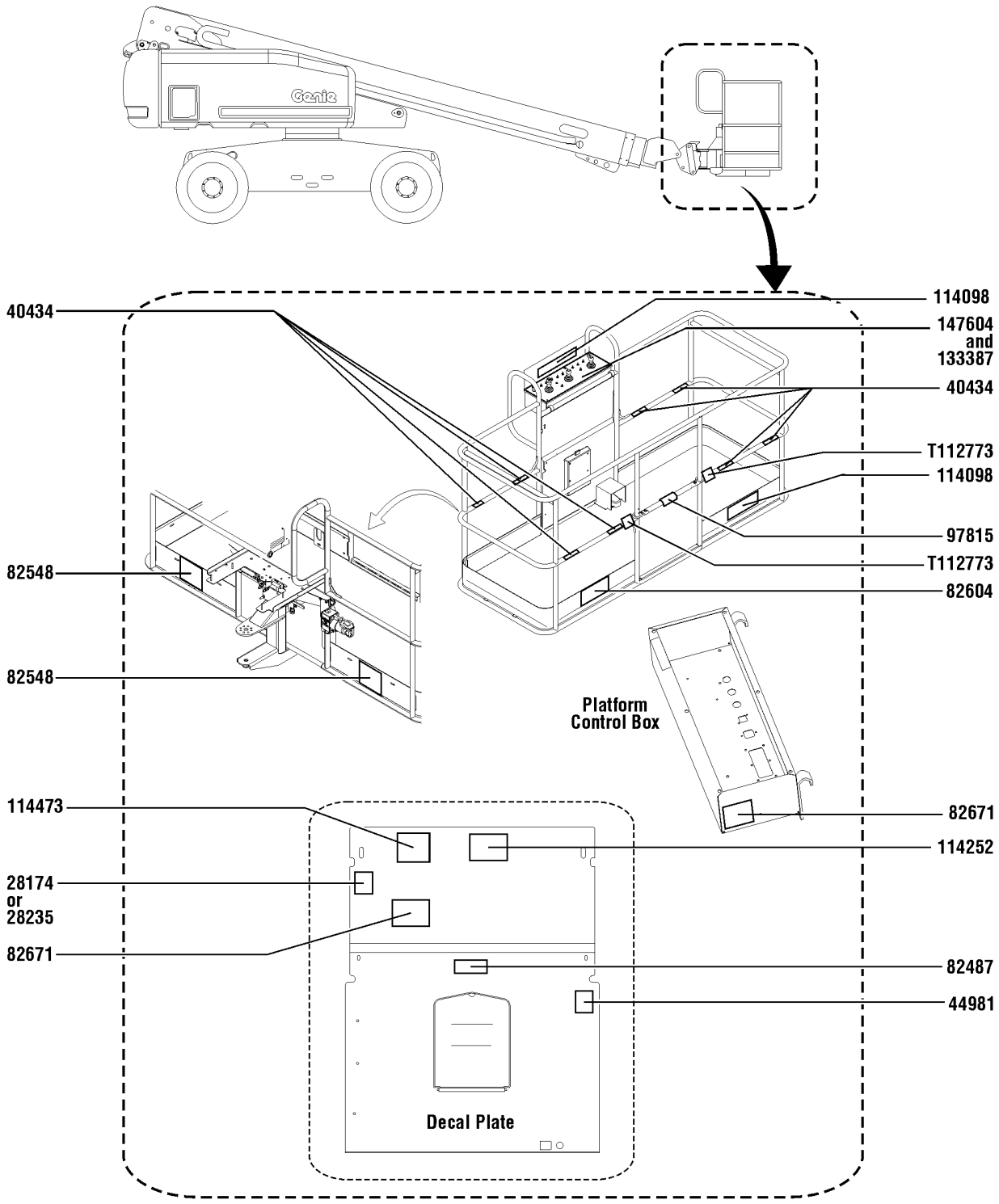

152.1 S-60HC Decals with Symbol, Platform (CE)

Item	*Part No.*	*Description*	*Qty.*
A	1296264GT	DECAL KIT,S60/65 PLAT SYM,ANSI/CE platform kit	
1	28174GT	DECAL,POWER TO PLATFORM 230V	1
2	28235GT	DECAL,POWER TO PLATFORM 115V	1
3	40434GT	DECAL,LANYARD ANCHORAGE POINT	8
4	44981GT	DECAL,LABEL,AIRLINE 110 PSI Option, airline to plat	1
5	82487GT	DECAL,SYMBOL-READ THE MANUAL	1
6	82548GT	DECAL,WARN,CRUSH HAZARD PLAT	2
7	82604GT	DECAL,DANGER,SIDE FRC 400N	1
8	82671GT	DECAL,LABEL,WELD LINE INST,SYM Option, weld cable line	2
9	97815GT	DECAL,LABEL,LOWER MIDRAIL	1
10	114098GT	DECAL,DANGER,MAX LOAD S60HCSYM	2
11	114252GT	DECAL,LABEL,TIP OVER LMT SWTCH	1
12	114473GT	DECAL,DANGER,TIPOVER,TILT,SYM	1
13	133387GT	DECAL,DRIVE ENABLE PATCH	1
14	147604GT	DECAL, PLAT CNTL PNL 60HC	1
15	T112773GT	TAPE, PROTECTIVE MASK	2

201.1 Steer End (to SN 26295), S-60

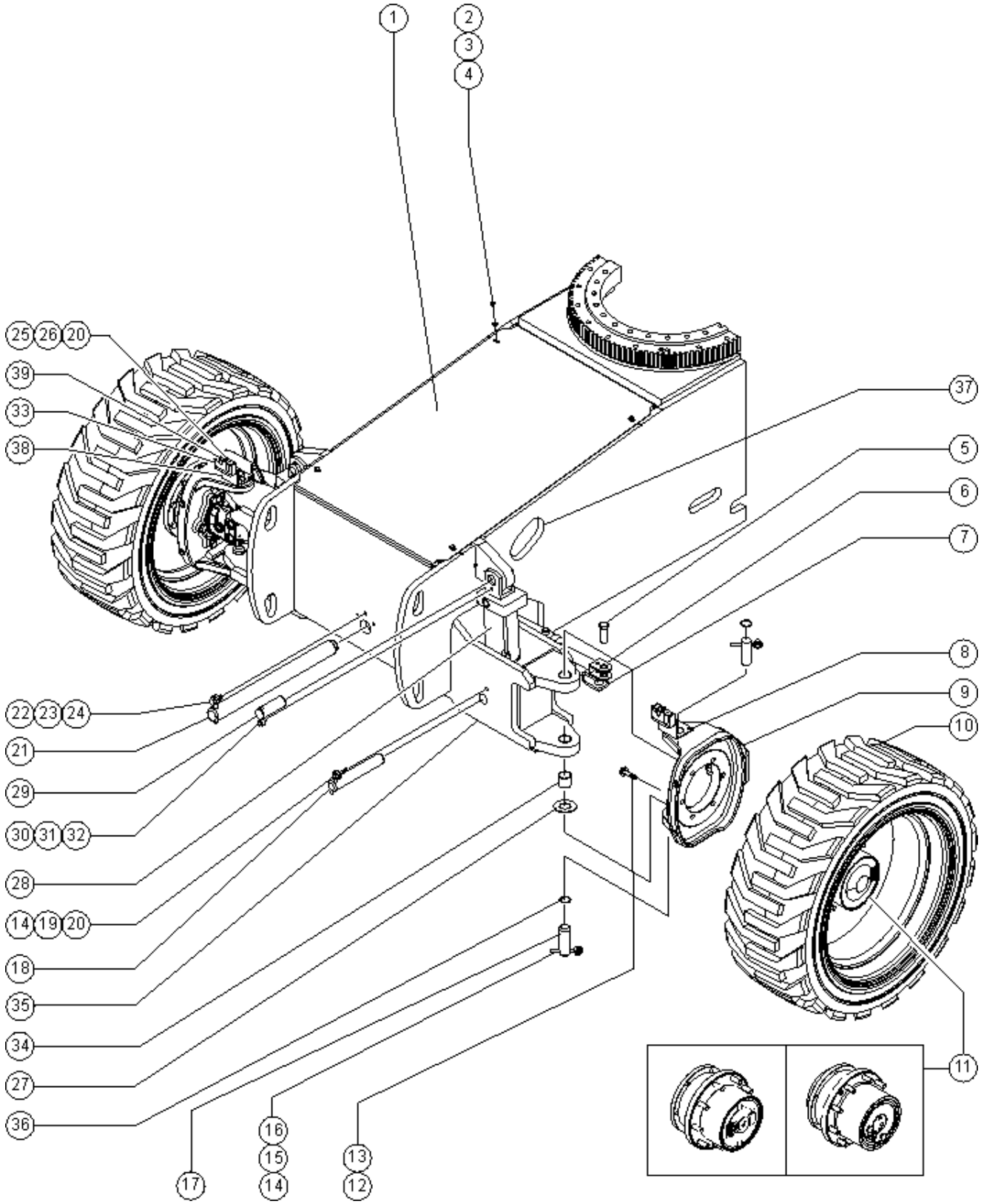

Item	Part No.	Description	Qty.
		4WD models (to SN S6012-23571) Visually identify which hub before ordering parts. ID tag is on end cover cap. Hubs are not interchangable, internal components are different for each type. All four hubs must be the same to avoid damage.	
1	94507GT	COVER, WITH DECALS, STEER END*	
2	7339GT	SCREW,HHC,1/4-20 X .5	
3	6638GT	WASHER, FLAT, USS, 1/4"Y	
4	56912GT	SPRING CLIP,1/4-20,.025-.15X.54,ZAG	
5	19440GT	PIN,CLEVIS,1 X 2.5 LG	6
5-	74389GT	RUE RING 1.00	
6	59460GT	CYLINDER,STEERING***	2
6-	89294GT	SEAL KIT CYLINDER (59460)	
7	77643GT	TIE ROD WELDMENT,S60	1
8	107615PGT	BRACKET,HOSE ROUTING,LH,PTD	1
9	77726GT	YOKE ASSEMBLY W/BEARINGS,LH	
9	77725GT	YOKE ASSEMBLY W/BEARINGS,RH	
9-	25817GT	BEARING,1.00IDX1.25ODX1.00L	
10A	88730GT	TIRE & WHEEL ASSY,AIR,LH RT, Air-filled, left (S-60,S-65)	2
10A	88729GT	TIRE & WHEEL ASSY,AIR,RH*** RT, Air-filled, right (S-60,S-65)	2
10A-	88727GT	WHEEL, 24.5X11.75, 9 X 9 BCD for 88730 & 88729	
10A-	88728GT	TIRE,355/55D625 for 88730 & 88729	
10B	77791GT	TIRE & WHEEL ASSY, LH, 355/55D625, FF RT, Foam-filled, left (S-60,S-65,S-60X,S-60XC, S-60HC; overall diameter: 37 inches)	2
10B	77790GT	TIRE & WHEEL ASSY, RH, 355/55D625, FF RT, Foam-filled, right (S-60,S-65,S-60X,S-60XC, S-60HC; overall diameter: 37 inches)	2
10C	94332GT	TIRE & WHEEL ASSY,TURF SPEC*** Turf, Air-filled (S-60,S-65)	4
10C-	94333GT	WHEEL,22.5X14.00*** for 94332	
10C-	81164GT	TIRE,41/18LL X 22.5,14PR,TURF* for 94332	
10D	94534GT	WHEEL & TIRE ASSY,RH,NM AIR RT, Air-filled, Non-marking, right (S-60,S-65,S-60X)	2
10D	94535GT	WHEEL & TIRE ASSY,LH NM AIR RT, Air-filled, Non-marking, left (S-60,S-65,S-60X)	2
10D-	88727GT	WHEEL, 24.5X11.75, 9 X 9 BCD for 94534 & 94535	
10D-	94536GT	TIRE,355/55D625,14 PLY,NM for 94534 & 94535	

201.1 Steer End (to SN 26295), S-60

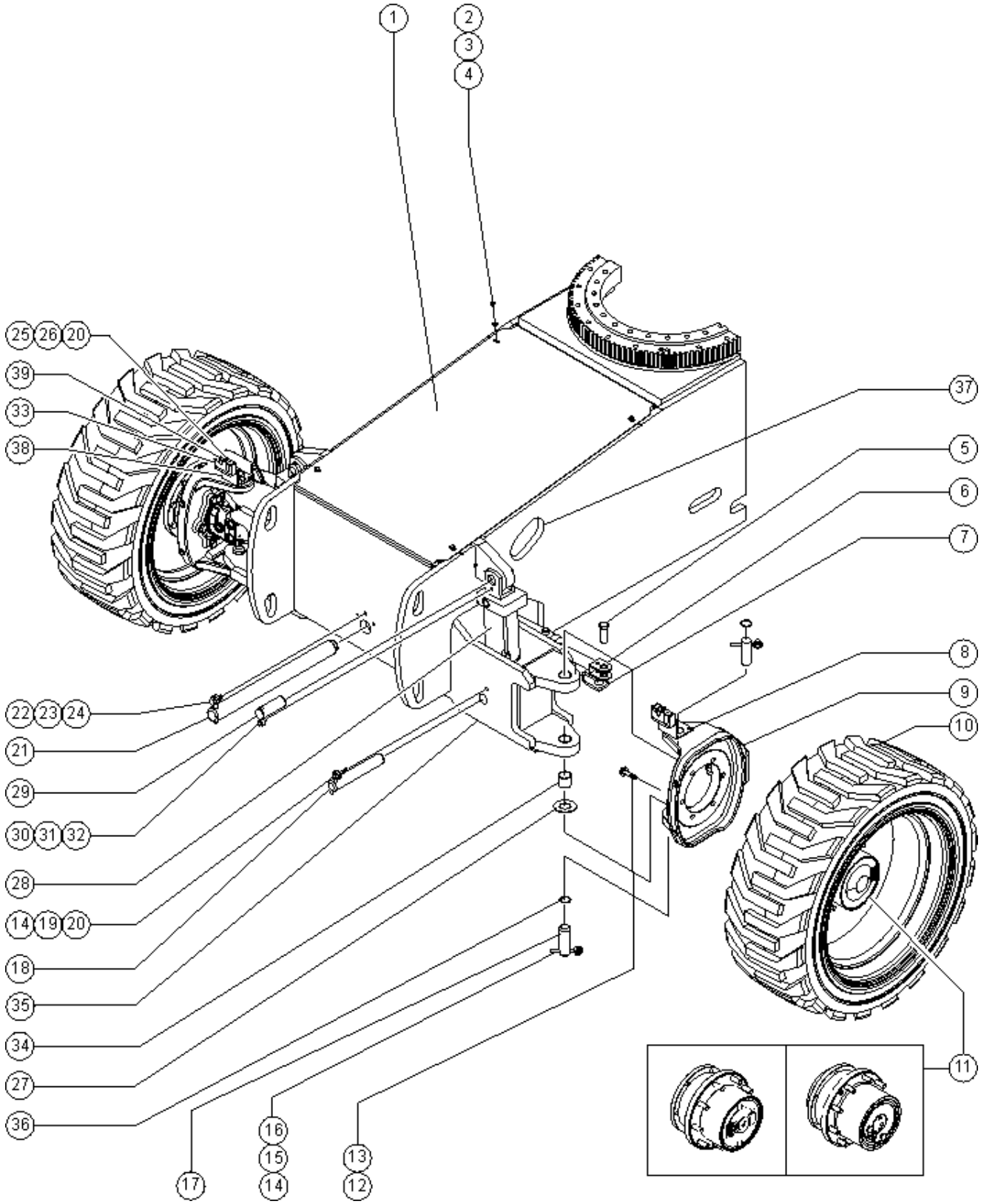

Item	Part No.	Description	Qty.
10E	106647GT	TIRE & WHEEL ASSY,RH,FOAM,NM RT, Foam-filled, Non-marking, right (S-60,S-65,S-60X,S-60XC, S-60HC; overall diameter: 37 inches)	2
10E	106648GT	TIRE & WHEEL ASSY,LH,FOAM,NM RT, Foam-filled, Non-marking, left (S-60,S-65,S-60X,S-60XC, S-60HC; overall diameter: 37 inches)	2
10F	110727GT	TIRE/WHEEL ASSY,LP RT W/SEALAN RT, Air-filled, with sealant, left (S-60,S-65,S-60X)	2
10F	110728GT	TIRE/WHEEL ASSY,LP RT W/SEALAN RT, Air-filled, with sealant, right (S-60,S-65,S-60X)	2
10G	110730GT	TIRE/WHEEL ASSY,LP NM W/SEALAN RT, Air-filled, Non-marking, with sealant, right (S-60,S-65,S-60X)	2
10G	110731GT	TIRE/WHEEL ASSY,LP NM W/SEALAN RT, Air-filled, Non-marking, with sealant, left (S-60,S-65,S-60X)	2
10H	110733GT	TIRE/WHEEL ASSY,HF W/SEALANT Turf, Air-filled, with sealant (S-60,S-65)	4
11A	88884GT	MOTOR,PISTON,30CC,4WD*** 4WD models	2
11A-	72290GT	SNAP RING(M46 UNITS)* for 88884	
11A-	102158GT	O-RING,.103 X 4.737,VITON, 75D for 88884	
11A-	102159GT	SHAFT,15 TOOTH for 88884	
11A-	102155GT	BEARING,BALL DRIVE SHAFT for 88884	
11A-	27067GT	SEAL,SHAFT-SUNDSTRAND*** for 88884	
11A-	106098GT	SEAL KIT,MOTOR,LC/KC*** for 88884	
11B	88887GT	WHEEL DRIVE 56:1 2WD TYPE: RR. 4WD models (to SN S6012-23571) Visually identify which hub before ordering parts. ID tag is on end cover cap. Hubs are not interchangable, internal components are different for each type.	2
11B-	102126GT	SEAL KIT,DRIVE HUB (88887) for 88886. Lip seal comes in seal kit, not available individually.	
11B-	102131GT	DISCONNECT KIT (88887) for 88886. Comes with disconnect rod, cover, and mounting screws.	
11B-	102162GT	LUG,STUD/WHEEL (88887) for 88886. Clipped style head.	
11B-	102157GT	O-RING,.070 X .239,VITON 75D for 88886	
11B-	102163GT	RING,RETAINING*** for 88886	
11B-	102164GT	COVER,END,KIT (88887) for 88886. Includes disconnect cover and drain plug o-ring; order 102864 drain plugs separately.	
11B-	102684GT	PLUG,DRAIN,RR TRANS,DRIVE HUBS for 88886. Plug comes with o-ring; o-ring not available separately.	
11B-	215340GT	LOCKRING, RR for 88886	
11B-	102166GT	VALVE,CHECK,30 PSI for 88886	
11B-	102167GT	SHAFT,INPUT DRIVE HUB for 88886	
11B-	215642GT	BRAKE KIT (88886)*** for 88886	
11B-	102516GT	RING,RETAINING,INTERNAL for 88886	

201.1 Steer End (to SN 26295), S-60

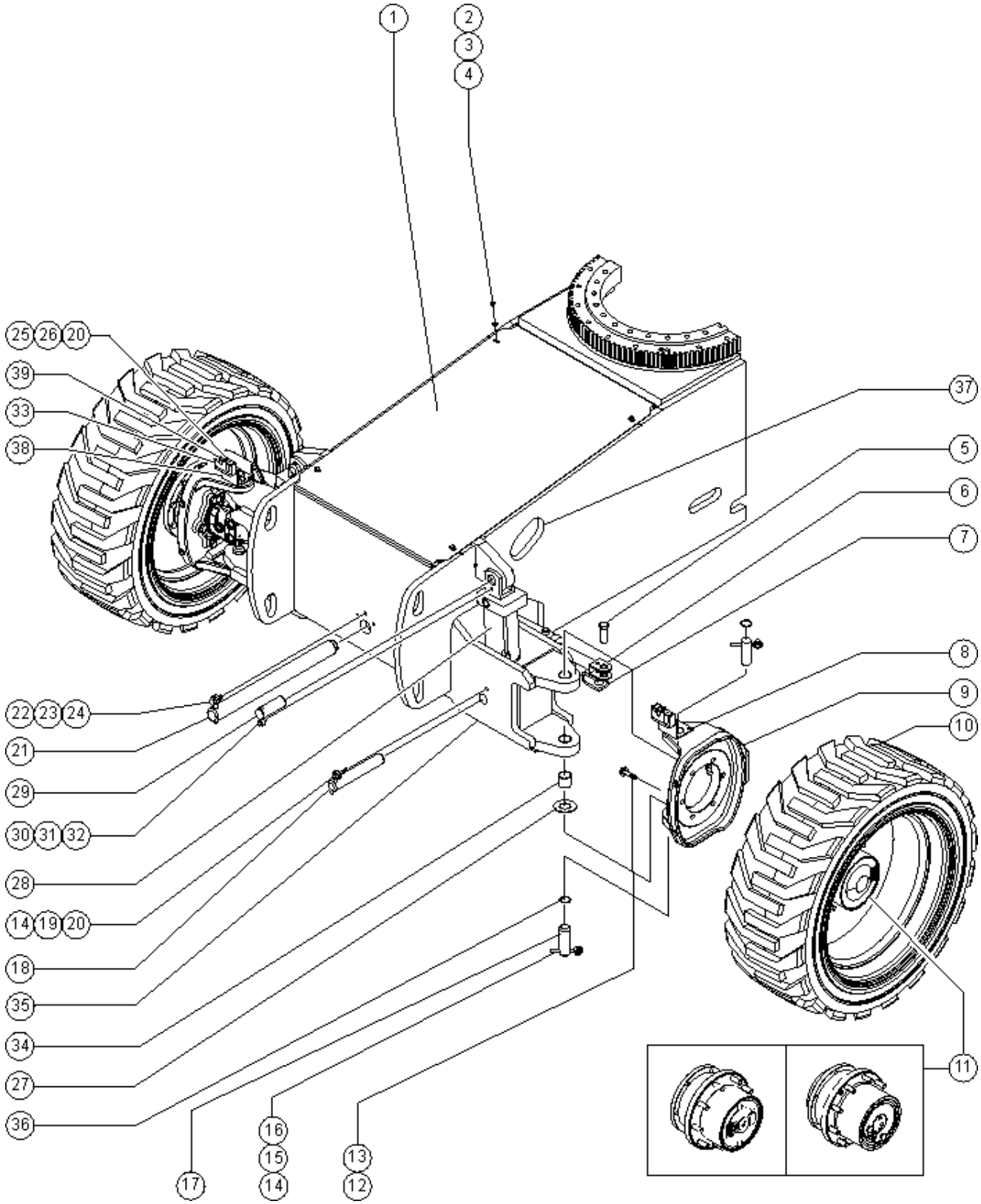

Item	Part No.	Description	Qty.
11B-	1274613GT	HUB SCREW for 88887	
11C		WHEEL DRIVE 57.5:1 4WD TYPE: OMNI. 4WD models (from SN S6012-23572) PN 231612 REPLACED OMNIGEAR WHEEL DRIVE PN 229702	2
11C-	139965GT	WHEEL STUD,5/8-18,OMNI*** for 229702	
11C-	139966GT	ROD,DISCONNECT,OMNI*** for 229702	
11C-	139967GT	CAP,DISENGAGE,OMNI*** for 229702	
11C-	139968GT	O-RING,END COVER,OMNI*** for 229702	
11C-	139969GT	LINING KIT,BRAKE,OMNI*** for 229702	
11C-	139970GT	SEAL KIT,BRAKE,OMNI*** for 229702	
11C-	139971GT	BEARING KIT,OMNI*** for 229702	
11C-	139972GT	SEAL KIT,GEARBOX,OMNI*** for 229702	
11C-	147033GT	O-RING,PIPE PLUG KIT,OMNI*** for 229702	
11C-	147034GT	PIPE PLUG KIT,OMNI*** for 229702	
11C-	1260084GT	END CAP, WHEEL DRIVE for 229702	
11D	231612GT	WHEEL DRIVE,W/BRAKE 4WD	2
11D-	102158GT	O-RING,.103 X 4.737,VITON, 75D	
11D-	106117GT	O-RING,2-010,VITON	
11D-	230849GT	WHEEL STUD,5/8-18X67MM	
11D-	139966GT	ROD,DISCONNECT,OMNI***	
11D-	139967GT	CAP,DISENGAGE,OMNI***	
11D-	139968GT	O-RING,END COVER,OMNI***	
11D-	139969GT	LINING KIT,BRAKE,OMNI***	
11D-	139970GT	SEAL KIT,BRAKE,OMNI***	
11D-	139971GT	BEARING KIT,OMNI***	
11D-	139972GT	SEAL KIT,GEARBOX,OMNI***	
11D-	147033GT	O-RING,PIPE PLUG KIT,OMNI***	
11D-	147034GT	PIPE PLUG KIT,OMNI***	
11D-	1260082GT	SPRING, HELICAL, RH	
12	73455GT	SCREW,HHC,5/8-11 X 2.25 GR8	12

201.1 Steer End (to SN 26295), S-60

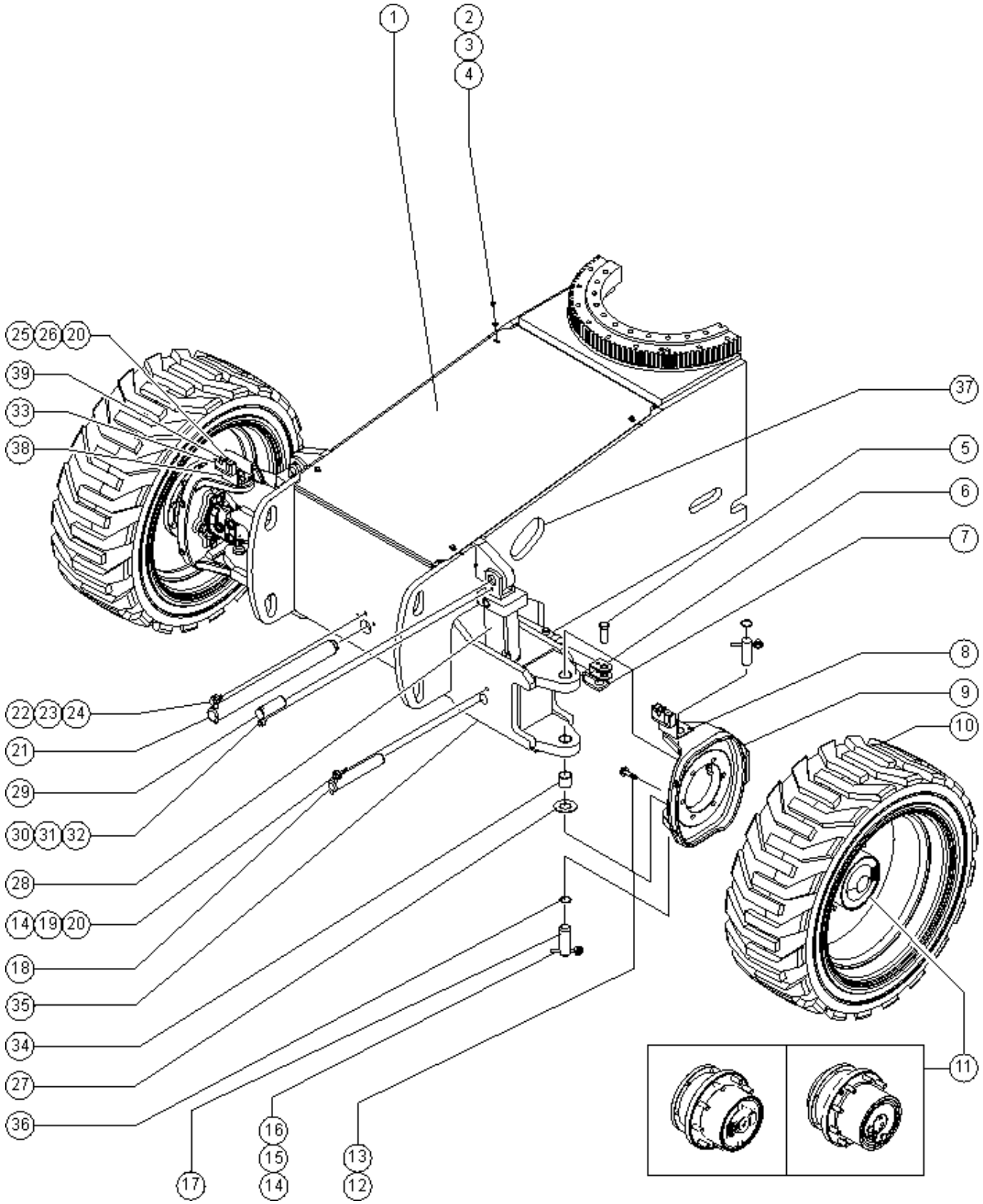

Item	Part No.	Description	Qty.
13	13064GT	WASHER,FLAT,.625 HARDENED	12
14	825019GT	ROD END, .375X3.69, ZAG	
15	8255GT	SCREW,HHC,3/8-16 X .75	
16	6021GT	WASHER, LOCK, .375	
17	110221GT	PIN,GROOVE/HOLE,1.50 DIAX4.475	4
18	77880GT	PIN,1.50DIAX9.38LG,1HOLE	2
19	5224GT	SCREW,HHC,3/8-16 X 2	
20	4828GT	NUT, NYLOCK, 3/8-16	
21	77610GT	PIN,2.00DIAX23.13LG,CHAMFER	1
22	1256267GT	ROD END,.5 X 3.75,ZAG	
23	8177GT	SCREW,HHC,1/2-13 X 1.5	
24	6033GT	WASHER,LOCK,0.5"	
25	6326GT	SCREW,HHC,3/8-16 X 3	
26	6097GT	WASHER, FLAT, USS, 3/8", Y	
27	45074GT	WASHER,THRUST,1.5 X 3.5 X .187	2
28	110578GT	CYLINDER,OSCILLATE,S60	2
28-	33428GT	VALVE,COUNTERBALANCE	
28-	89295GT	SEAL KIT,CYLINDER (63189)	
29	94221GT	PIN,1.50DIAX3.75LG,1HOLE	2
30	1255452GT	ROD END,.375 X 2.25,ZAG	
31	6021GT	WASHER, LOCK, .375	
32	6175GT	SCREW,HHC,3/8-16 X 1	
33	106516GT	CLAMP,HOSE,2X4,1X6,2X8***	2
34	45071GT	BEARING,1.5IDX1.75ODX1.5L included with 119145GT	
35	119146GT	AXLE ASSEMBLY,S60 FRONT Includes item 34	1
35-	42014GT	BEARING,2.00IDX2.25ODX2.00L not included with 119145GT; order seperately	2
36	825796GT	SNAP RING,EXTERNAL,1.50,ZAG	
37	53386GT	GUARD, HOSE PROTECTOR	1

201.1 Steer End (to SN 26295), S-60

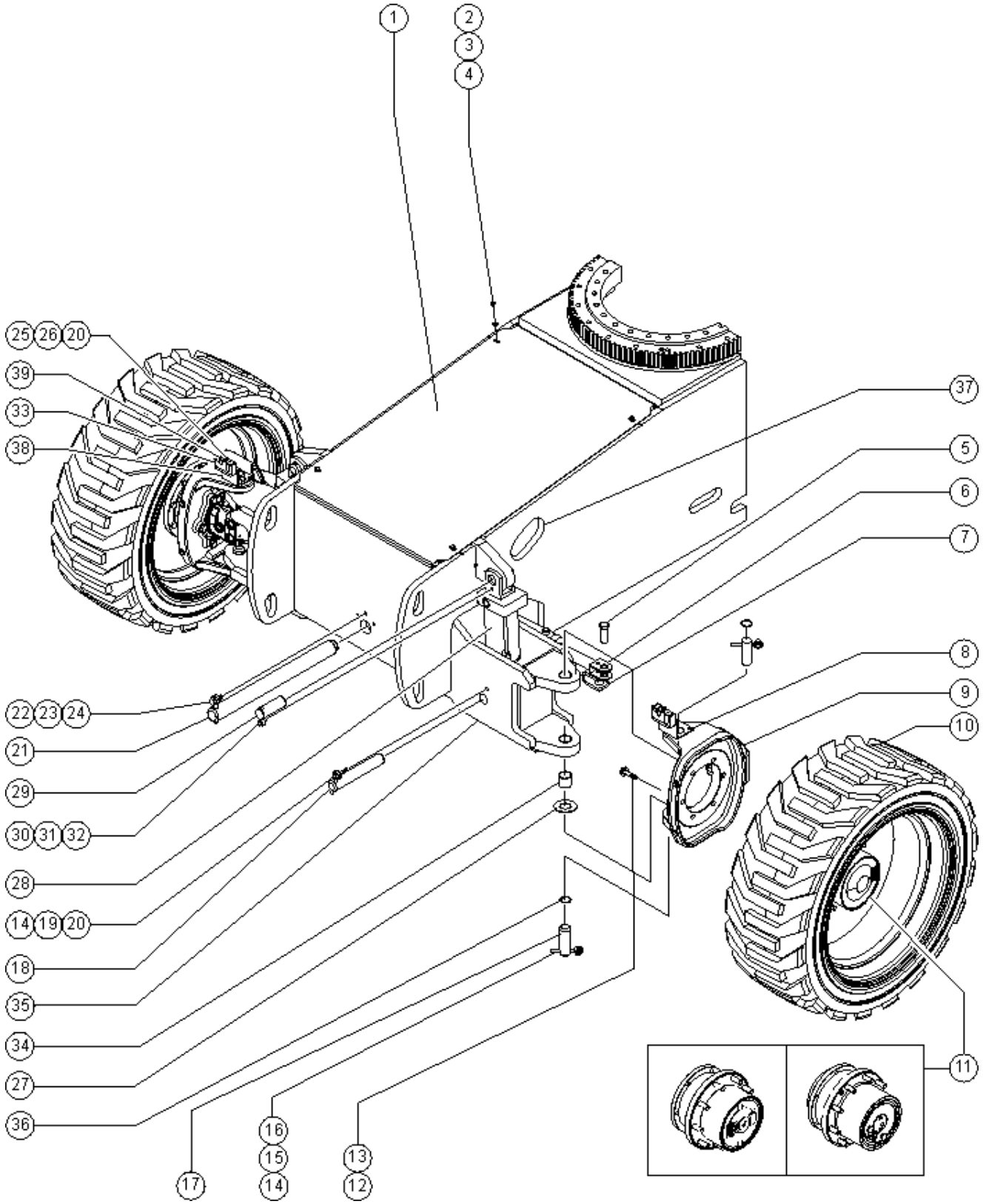

201.1 Steer End (to SN 26295), S-60

Item	*Part No.*	*Description*	*Qty.*
38	107616PGT	BRACKET,HOSE ROUTING,RH,PNTD	1
39	106517PGT	CLAMP TOP,HOSE ROUTING PAINTED	2

201.2 Steer End (to SN 26295), S-65

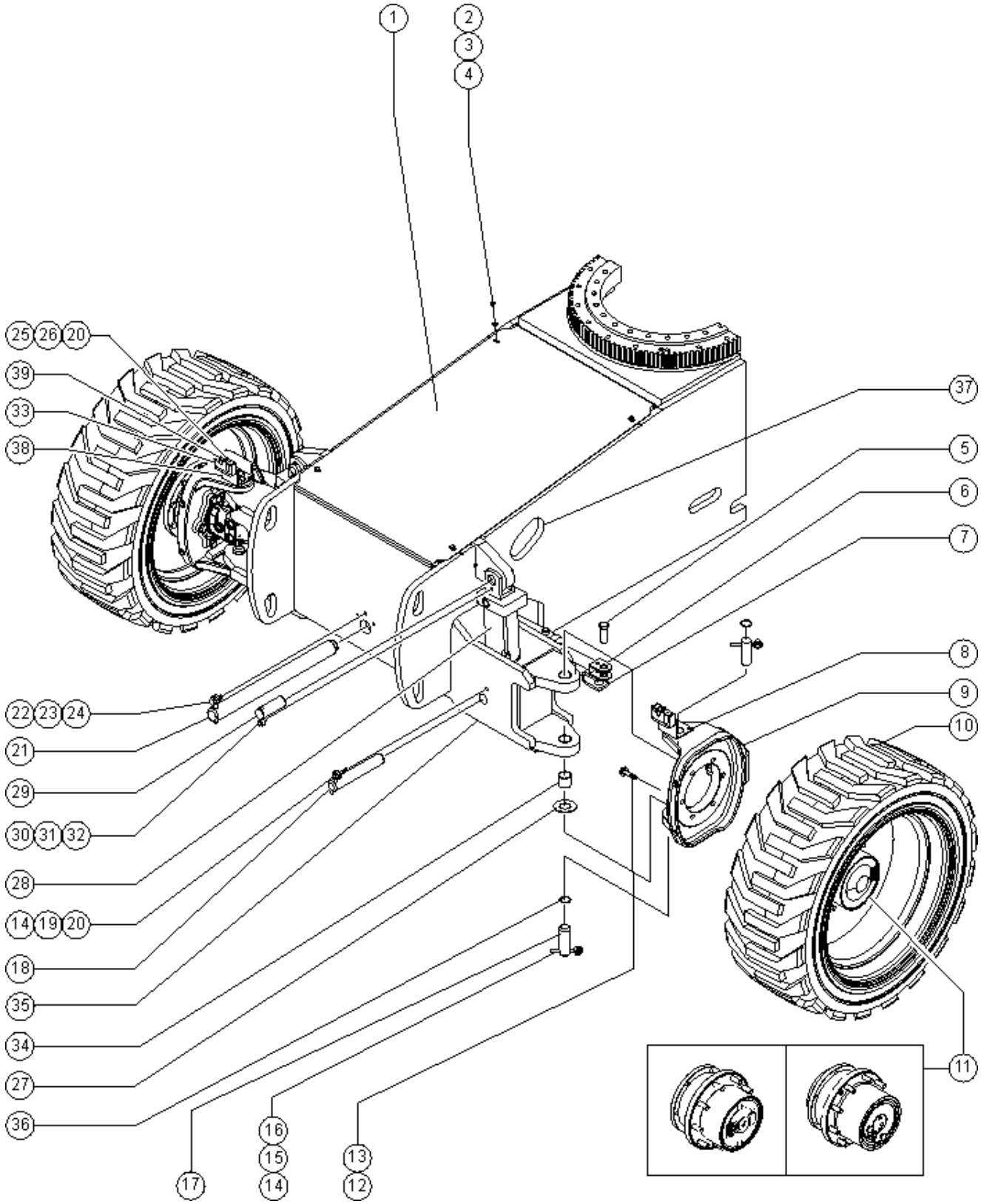

201.2 Steer End (to SN 26295), S-65

Item	Part No.	Description	Qty.
1	94507GT	COVER, WITH DECALS, STEER END*	
2	7339GT	SCREW,HHC,1/4-20 X .5	
3	6638GT	WASHER, FLAT, USS, 1/4"Y	
4	56912GT	SPRING CLIP,1/4-20,.025-.15X.54,ZAG	
5	19440GT	PIN,CLEVIS,1 X 2.5 LG	6
5-	74389GT	RUE RING 1.00	
6	59460GT	CYLINDER,STEERING***	2
6-	89294GT	SEAL KIT CYLINDER (59460)	
7	77643GT	TIE ROD WELDMENT,S60	1
8	107615PGT	BRACKET,HOSE ROUTING,LH,PTD	1
9	77726GT	YOKE ASSEMBLY W/BEARINGS,LH	
9-	77725GT	YOKE ASSEMBLY W/BEARINGS,RH	
9-	25817GT	BEARING,1.00IDX1.25ODX1.00L	
10A	88730GT	TIRE & WHEEL ASSY,AIR,LH RT, Air-filled, left (S-60,S-65)	2
10A	88729GT	TIRE & WHEEL ASSY,AIR,RH*** RT, Air-filled, right (S-60,S-65)	2
10A-	88727GT	WHEEL, 24.5X11.75, 9 X 9 BCD for 88730, 88729	
10A-	88728GT	TIRE,355/55D625 for 88730, 88729	
10B	77791GT	TIRE & WHEEL ASSY, LH, 355/55D625, FF RT, Foam-filled, left (S-60,S-65,S-60X,S-60XC, S-60HC; overall diameter: 37 inches)	2
10B	77790GT	TIRE & WHEEL ASSY, RH, 355/55D625, FF RT, Foam-filled, right (S-60,S-65,S-60X,S-60XC, S-60HC; overall diameter: 37 inches)	2
10C	94332GT	TIRE & WHEEL ASSY,TURF SPEC*** Turf, Air-filled (S-60,S-65)	4
10C-	94333GT	WHEEL,22.5X14.00*** for 94332	
10C-	81164GT	TIRE,41/18LL X 22.5,14PR,TURF* for 94332	
10D	94534GT	WHEEL & TIRE ASSY,RH,NM AIR RT, Air-filled, Non-marking, right (S-60,S-65,S-60X)	2
10D	94535GT	WHEEL & TIRE ASSY,LH NM AIR RT, Air-filled, Non-marking, left (S-60,S-65,S-60X)	2
10D-	88727GT	WHEEL, 24.5X11.75, 9 X 9 BCD for 94534, 94535	
10D-	94536GT	TIRE,355/55D625,14 PLY,NM for 94534, 94535	
10E	106647GT	TIRE & WHEEL ASSY,RH,FOAM,NM RT, Foam-filled, Non-marking, right (S-60,S-65,S-60X,S-60XC, S-60HC; overall diameter: 37 inches)	2

201.2 Steer End (to SN 26295), S-65

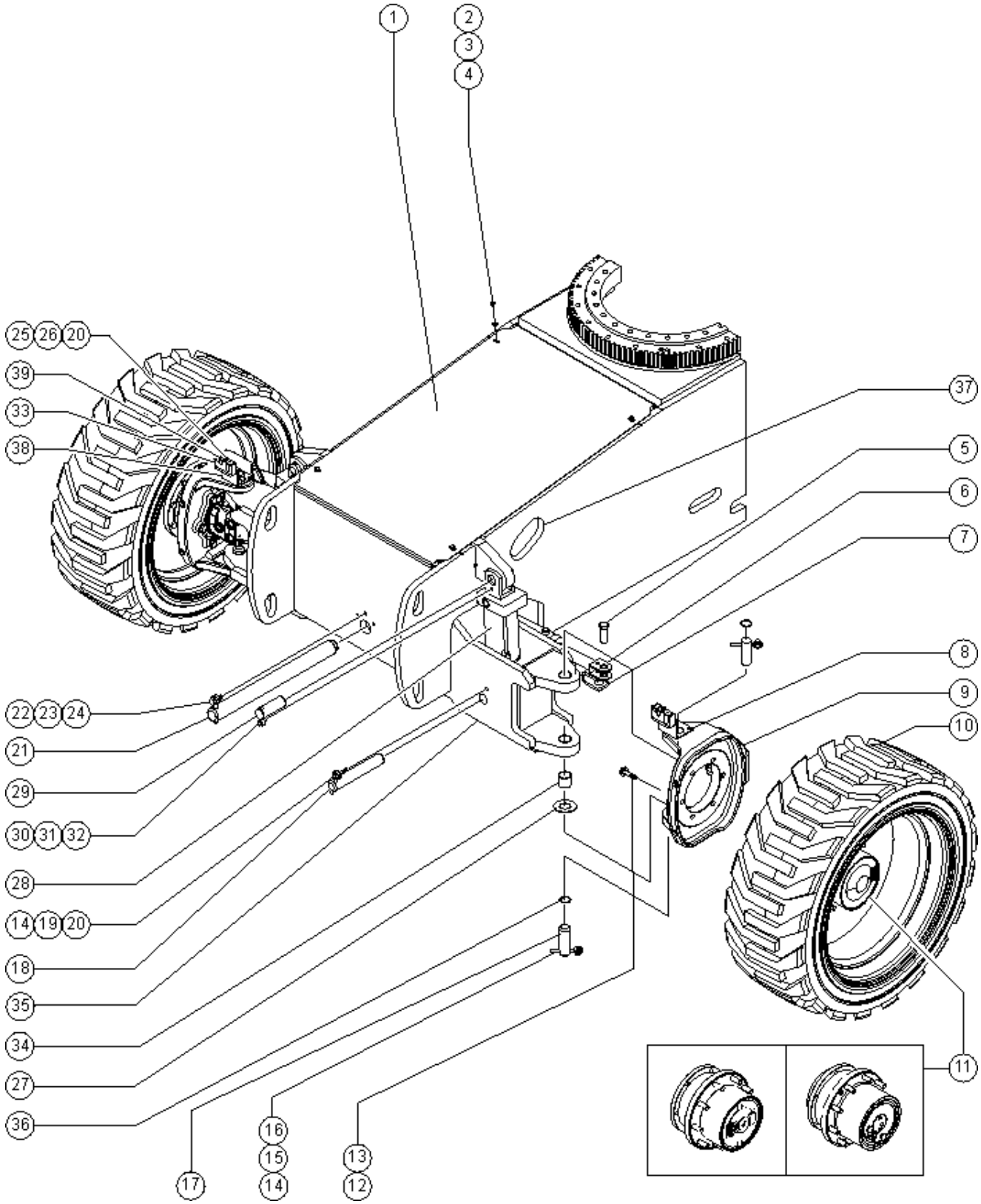

Item	Part No.	Description	Qty.
10E	106648GT	TIRE & WHEEL ASSY,LH,FOAM,NM RT, Foam-filled, Non-marking, left (S-60,S-65,S-60X,S-60XC, S-60HC; overall diameter: 37 inches)	2
10F	110727GT	TIRE/WHEEL ASSY,LP RT W/SEALAN RT, Air-filled, with sealant, left (S-60,S-65,S-60X)	2
10F	110728GT	TIRE/WHEEL ASSY,LP RT W/SEALAN RT, Air-filled, with sealant, right (S-60,S-65,S-60X)	2
10G	110730GT	TIRE/WHEEL ASSY,LP NM W/SEALAN RT, Air-filled, Non-marking, with sealant, right (S-60,S-65,S-60X)	2
10G	110731GT	TIRE/WHEEL ASSY,LP NM W/SEALAN RT, Air-filled, Non-marking, with sealant, left (S-60,S-65,S-60X)	2
10H	110733GT	TIRE/WHEEL ASSY,HF W/SEALANT Turf, Air-filled, with sealant (S-60,S-65)	4
11A	88884GT	MOTOR,PISTON,30CC,4WD*** 4WD models (to SN S6012-23571) Visually identify which hub before ordering parts. ID tag is on end cover cap. Hubs are not interchangable, internal components are different for each type. All four hubs must be the same to avoid damage.	2
11A-	72290GT	SNAP RING(M46 UNITS)* for 88884	
11A-	102158GT	O-RING,.103 X 4.737,VITON, 75D for 88884	
11A-	102159GT	SHAFT,15 TOOTH for 88884	
11A-	102155GT	BEARING,BALL DRIVE SHAFT for 88884	
11A-	27067GT	SEAL,SHAFT-SUNDSTRAND*** for 88884	
11A-	106098GT	SEAL KIT,MOTOR,LC/KC*** for 88884	
11B	88887GT	WHEEL DRIVE 56:1 2WD TYPE: FAIRFIELD. 4WD Models (from SN S6012-23572) Visually identify which hub before ordering parts. ID tag is on end cover cap. Hubs are not interchangable, internal components are different for each type. All four hubs must be the same to avoid damage.	2
11B-	102126GT	SEAL KIT,DRIVE HUB (88887) for 88886. Lip seal comes in seal kit, not available individually.	
11B-	102131GT	DISCONNECT KIT (88887) for 88886. Comes with disconnect rod, cover, and mounting screws.	
11B-	102162GT	LUG,STUD/WHEEL (88887) for 88886. Clipped style head.	
11B-	102157GT	O-RING,.070 X .239,VITON 75D for 88886	
11B-	102163GT	RING,RETAINING*** for 88886	
11B-	102164GT	COVER,END,KIT (88887) for 88886. Includes disconnect cover and drain plug o-ring; order 102864 drain plugs separately.	
11B-	102684GT	PLUG,DRAIN,RR TRANS.DRIVE HUBS for 88886. Plug comes with o-ring; o-ring not available separately.	
11B-	215340GT	LOCKRING, RR for 88886	
11B-	102166GT	VALVE,CHECK,30 PSI for 88886	
11B-	102167GT	SHAFT,INPUT DRIVE HUB for 88886	
11B-	215642GT	BRAKE KIT (88886)*** for 88886	
11B-	102516GT	RING,RETAINING,INTERNAL for 88886	

201.2 Steer End (to SN 26295), S-65

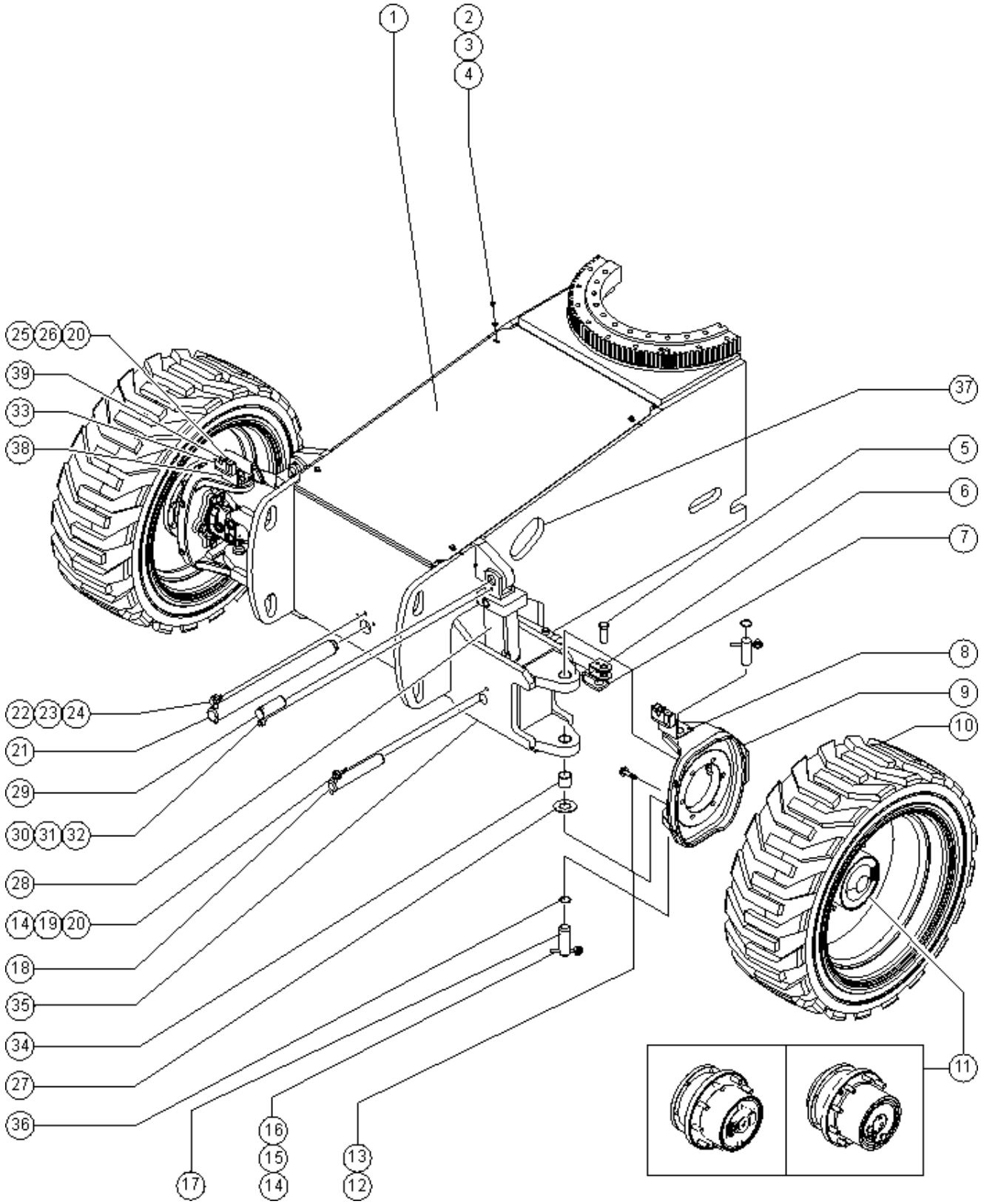

Item	Part No.	Description	Qty.
11C		WHEEL DRIVE 57.5:1 4WD TYPE: OMNI. 4WD Models (from SN S6012-23572) PN 231612 REPLACED OMNIGEAR WHEEL DRIVE PN 229702	2
11C-	139965GT	WHEEL STUD,5/8-18,OMNI*** for 229702	
11C-	139966GT	ROD,DISCONNECT,OMNI*** for 229702	
11C-	139967GT	CAP,DISENGAGE,OMNI*** for 229702	
11C-	139968GT	O-RING,END COVER,OMNI*** for 229702	
11C-	139969GT	LINING KIT,BRAKE,OMNI*** for 229702	
11C-	139970GT	SEAL KIT,BRAKE,OMNI*** for 229702	
11C-	139971GT	BEARING KIT,OMNI*** for 229702	
11C-	139972GT	SEAL KIT,GEARBOX,OMNI*** for 229702	
11C-	147033GT	O-RING,PIPE PLUG KIT,OMNI*** for 229702	
11C-	147034GT	PIPE PLUG KIT,OMNI*** for 229702	
11C-	1260084GT	END CAP, WHEEL DRIVE for 229702	
11D	231612GT	WHEEL DRIVE,W/BRAKE 4WD	2
11D-	102158GT	O-RING,.103 X 4.737,VITON, 75D	
11D-	106117GT	O-RING,2-010,VITON	
11D-	230849GT	WHEEL STUD,5/8-18X67MM	
11D-	139966GT	ROD,DISCONNECT,OMNI***	
11D-	139967GT	CAP,DISENGAGE,OMNI***	
11D-	139968GT	O-RING,END COVER,OMNI***	
11D-	139969GT	LINING KIT,BRAKE,OMNI***	
11D-	139970GT	SEAL KIT,BRAKE,OMNI***	
11D-	139971GT	BEARING KIT,OMNI***	
11D-	139972GT	SEAL KIT,GEARBOX,OMNI***	
11D-	147033GT	O-RING,PIPE PLUG KIT,OMNI***	
11D-	147034GT	PIPE PLUG KIT,OMNI***	
11D-	1260082GT	SPRING, HELICAL, RH	
12	73455GT	SCREW,HHC,5/8-11 X 2.25 GR8	12
13	13064GT	WASHER,FLAT,.625 HARDENED	12

201.2 Steer End (to SN 26295), S-65

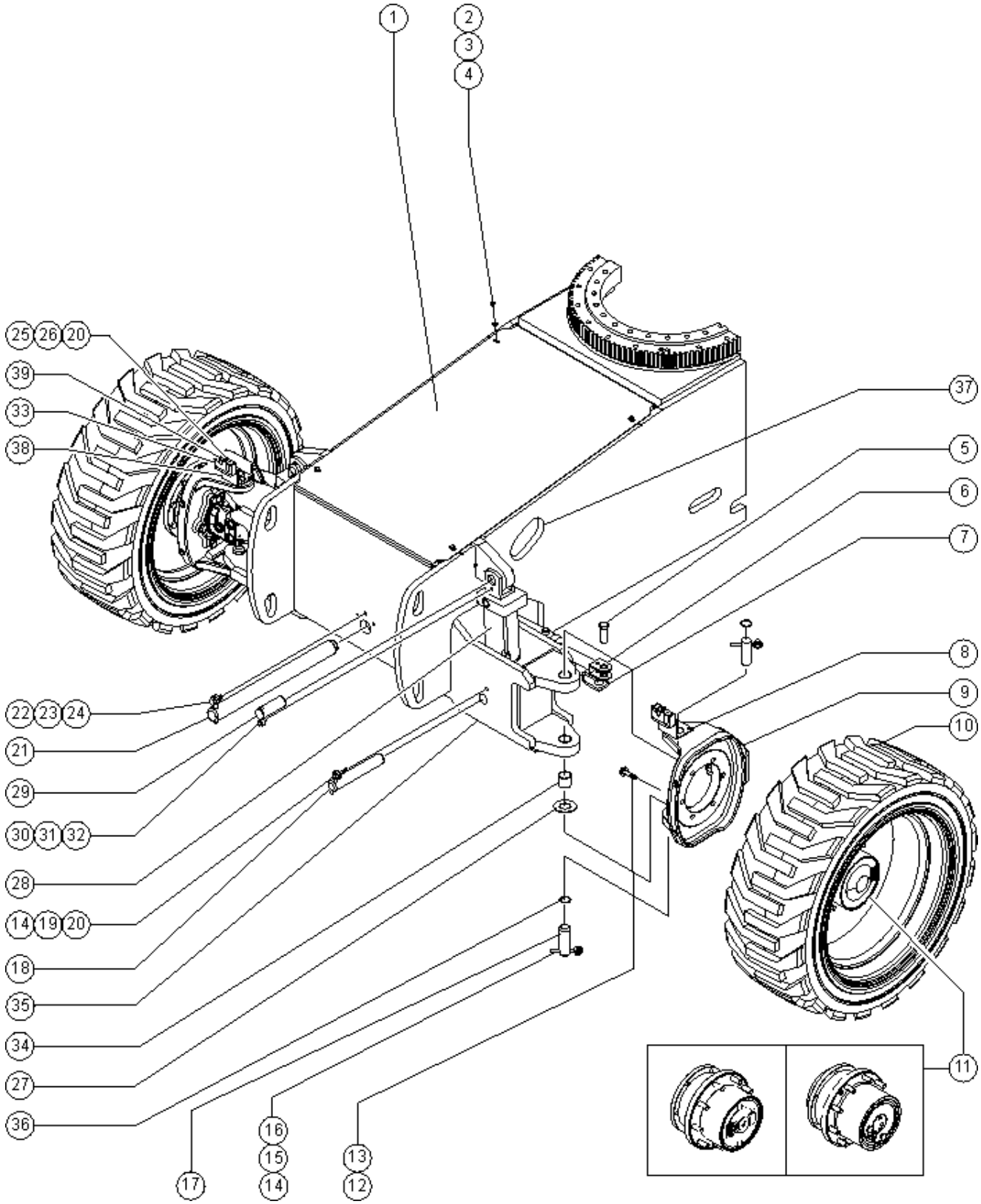

Item	Part No.	Description	Qty.
14	825019GT	ROD END, .375X3.69, ZAG	
15	8255GT	SCREW,HHC,3/8-16 X .75	
16	6021GT	WASHER, LOCK, .375	
17	110221GT	PIN,GROOVE/HOLE,1.50 DIAX4.475	4
18	77880GT	PIN,1.50DIAX9.38LG,1HOLE	2
19	5224GT	SCREW,HHC,3/8-16 X 2	
20	4828GT	NUT, NYLOCK, 3/8-16	
21	77610GT	PIN,2.00DIAX23.13LG,CHAMFER	1
22	1256267GT	ROD END,.5 X 3.75,ZAG	
23	8177GT	SCREW,HHC,1/2-13 X 1.5	
24	6033GT	WASHER,LOCK,0.5"	
25	6326GT	SCREW,HHC,3/8-16 X 3	
26	6097GT	WASHER, FLAT, USS, 3/8", Y	
27	45074GT	WASHER,THRUST,1.5 X 3.5 X .187	2
28	110578GT	CYLINDER,OSCILLATE,S60	2
28-	33428GT	VALVE,COUNTERBALANCE	
28-	89295GT	SEAL KIT,CYLINDER (63189)	
29	94221GT	PIN,1.50DIAX3.75LG,1HOLE	2
30	1255452GT	ROD END,.375 X 2.25,ZAG	
31	6021GT	WASHER, LOCK, .375	
32	6175GT	SCREW,HHC,3/8-16 X 1	
33	106516GT	CLAMP,HOSE,2X4,1X6,2X8***	2
34	45071GT	BEARING,1.5IDX1.75ODX1.5L	
35	119146GT	AXLE ASSEMBLY,S60 FRONT Includes item 34	1
35-	42014GT	BEARING,2.00IDX2.25ODX2.00L	2
36	825796GT	SNAP RING,EXTERNAL,1.50,ZAG	
37	53386GT	GUARD, HOSE PROTECTOR	1
38	107616PGT	BRACKET,HOSE ROUTING,RH,PNTD	1

201.2 Steer End (to SN 26295), S-65

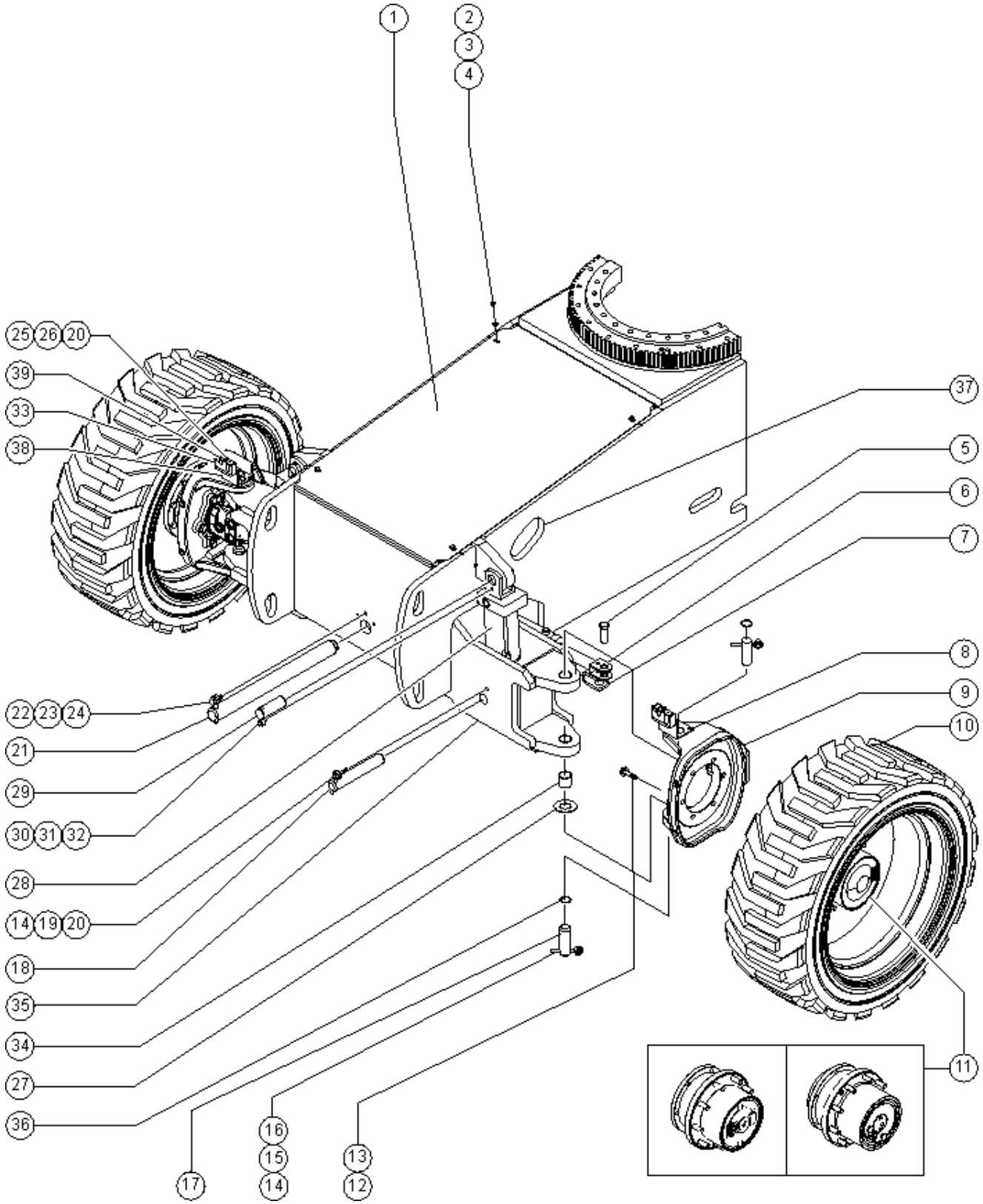

201.2 Steer End (to SN 26295), S-65

Item	Part No.	Description	Qty.
39	106517PGT	CLAMP TOP,HOSE ROUTING PAINTED	2

201.3 Steer End (from SN 26296), S-60

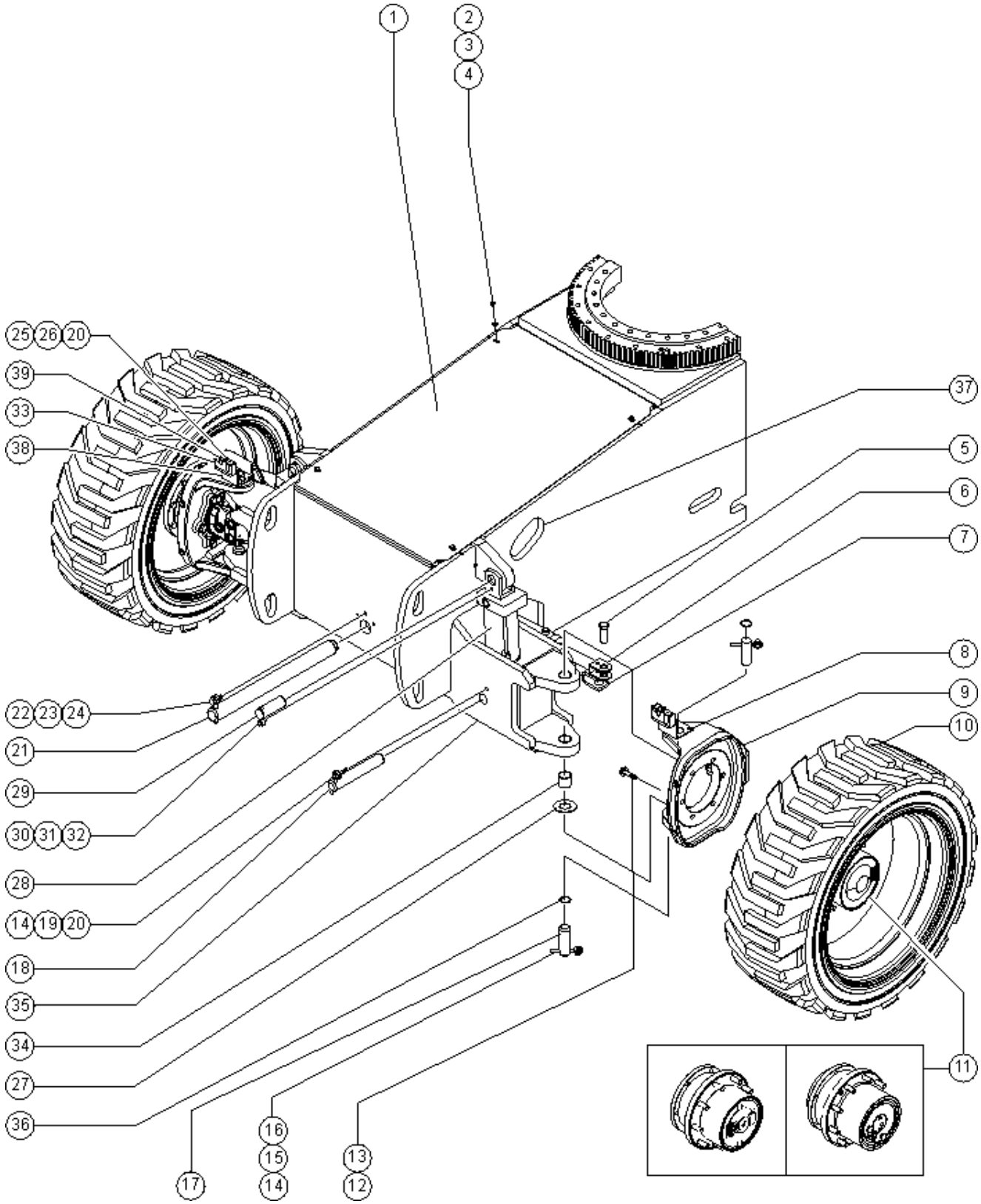

201.3 Steer End (from SN 26296), S-60

Item	Part No.	Description	Qty.
		4WD models (to SN S6012-23571) Visually identify which hub before ordering parts. ID tag is on end cover cap. Hubs are not interchangable, internal components are different for each type. All four hubs must be the same to avoid damage.	
1	94507GT	COVER, WITH DECALS, STEER END*	
2	7339GT	SCREW,HHC,1/4-20 X .5	
3	6638GT	WASHER, FLAT, USS, 1/4"Y	
4	56912GT	SPRING CLIP,1/4-20,.025-.15X.54,ZAG	
5	19440GT	PIN,CLEVIS,1 X 2.5 LG	6
5-	74389GT	RUE RING 1.00	
6	59460GT	CYLINDER,STEERING***	2
6-	89294GT	SEAL KIT CYLINDER (59460)	
7	77643GT	TIE ROD WELDMENT,S60	1
8	107615PGT	BRACKET,HOSE ROUTING,LH,PTD	1
9	77726GT	YOKE ASSEMBLY W/BEARINGS,LH	
9	77725GT	YOKE ASSEMBLY W/BEARINGS,RH	
9-	25817GT	BEARING,1.00IDX1.25ODX1.00L	
10A	88729GT	TIRE & WHEEL ASSY,AIR,RH*** RT, Air-filled, right (S-60,S-65,S-60X)	2
10A	88730GT	TIRE & WHEEL ASSY,AIR,LH RT, Air-filled, left (S-60,S-65,S-60X)	2
10A-	88727GT	WHEEL, 24.5X11.75, 9 X 9 BCD for 88730 & 88729	
10A-	88728GT	TIRE,355/55D625 for 88730 & 88729	
10B	77790GT	TIRE & WHEEL ASSY, RH, 355/55D625, FF RT, Foam-filled, right (S-60,S-65,S-60X,S-60XC,S-60HC; overall diameter: 37 inches)	2
10B	77791GT	TIRE & WHEEL ASSY, LH, 355/55D625, FF RT, Foam-filled, left (S-60,S-65,S-60X,S-60XC,S-60HC; overall diameter: 37 inches)	2
10C	94332GT	TIRE & WHEEL ASSY,TURF SPEC*** Turf, Air-filled (S-60,S-65,S-60X)	4
10C-	94333GT	WHEEL,22.5X14.00*** for 94332	
10C-	81164GT	TIRE,41/18LL X 22.5,14PR,TURF* for 94332	
10D	94534GT	WHEEL & TIRE ASSY,RH,NM AIR RT, Air-filled, Non-marking, right (S-60,S-65,S-60X)	2
10D	94535GT	WHEEL & TIRE ASSY,LH NM AIR RT, Air-filled, Non-marking, left (S-60,S-65,S-60X)	2
10D-	88727GT	WHEEL, 24.5X11.75, 9 X 9 BCD for 94534 & 94535	
10D-	94536GT	TIRE,355/55D625,14 PLY,NM for 94534 & 94535	

201.3 Steer End (from SN 26296), S-60

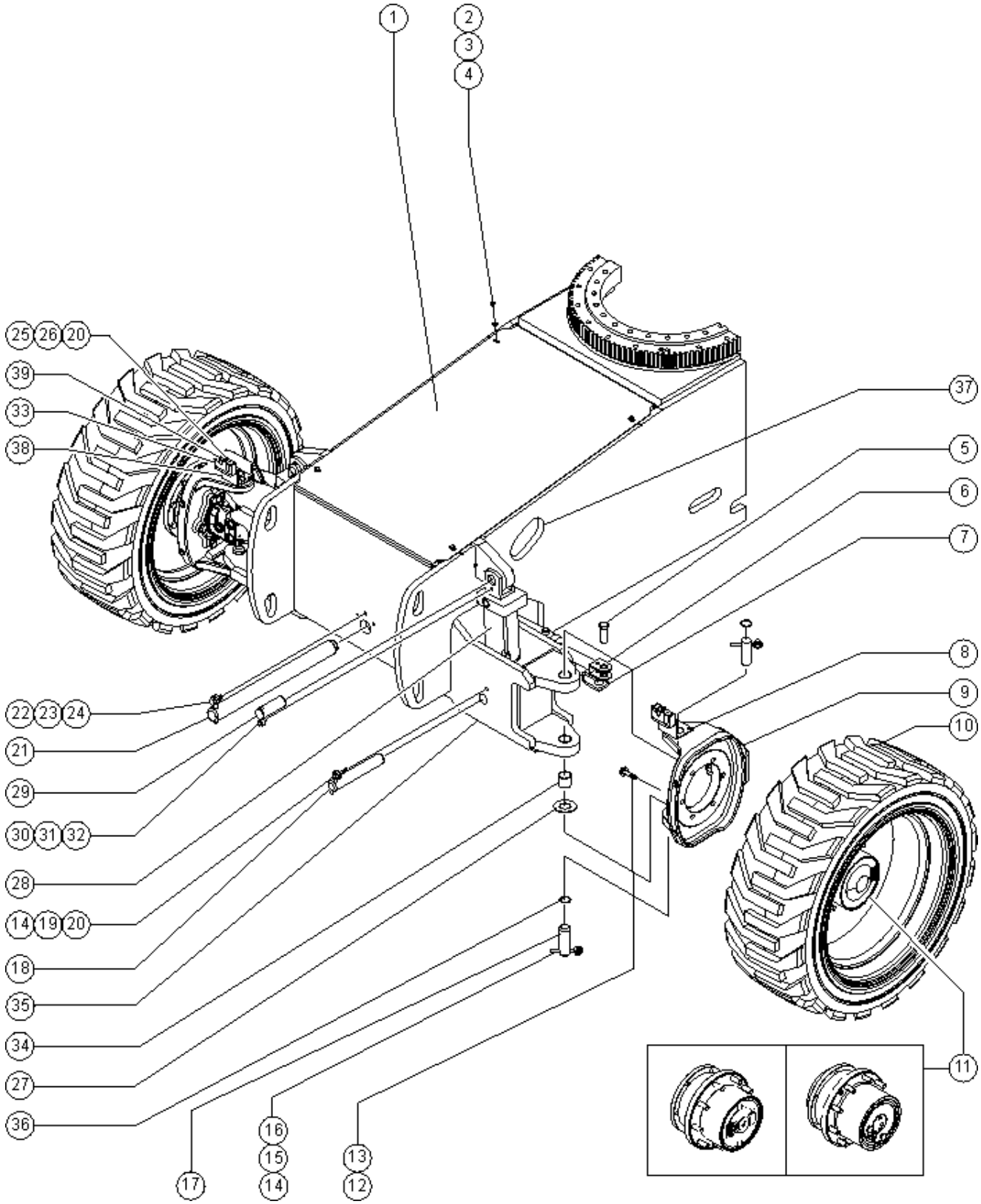

201.3 Steer End (from SN 26296), S-60

Item	Part No.	Description	Qty.
10E	106647GT	TIRE & WHEEL ASSY,RH,FOAM,NM RT, Foam-filled, Non-marking, right (S-60,S-65,S-60X,S-60XC,S-60HC; overall diameter: 37 inches)	2
10E	106648GT	TIRE & WHEEL ASSY,LH,FOAM,NM RT, Foam-filled, Non-marking, left (S-60,S-65,S-60X,S-60XC,S-60HC; overall diameter: 37 inches)	2
10F	110727GT	TIRE/WHEEL ASSY,LP RT W/SEALAN RT, Air-filled, with sealant, left (S-60,S-65,S-60X)	2
10F	110728GT	TIRE/WHEEL ASSY,LP RT W/SEALAN RT, Air-filled, with sealant, right (S-60,S-65,S-60X)	2
10G	110730GT	TIRE/WHEEL ASSY,LP NM W/SEALAN RT, Air-filled, Non-marking, with sealant, right (S-60,S-65,S-60X)	2
10G	110731GT	TIRE/WHEEL ASSY,LP NM W/SEALAN RT, Air-filled, Non-marking, with sealant, left (S-60,S-65,S-60X)	2
10H	110733GT	TIRE/WHEEL ASSY,HF W/SEALANT Turf, Air-filled, with sealant (S-60,S-65,S-60X)	4
10H-	81164GT	TIRE,41/18LL X 22.5,14PR,TURF*	
10H-	94333GT	WHEEL,22.5X14.00***	
10J	228768GT	TIRE/WH ASSY,RH,FF,REPNEU RT, Foam-filled, oil based (S-60, S-65,S-60X,S-60XC,S-60HC)	2
10J	228769GT	TIRE/WH ASSY,LH,FF,REPNEU*** RT, Foam-filled, oil based (S-60, S-65,S-60X,S-60XC,S-60HC)	2
11A	88884GT	MOTOR,PISTON,30CC,4WD*** 4WD models	2
11A-	72290GT	SNAP RING(M46 UNITS)* for 88884	
11A-	102158GT	O-RING,.103 X 4.737,VITON, 75D for 88884	
11A-	102159GT	SHAFT,15 TOOTH for 88884	
11A-	102155GT	BEARING,BALL DRIVE SHAFT for 88884	
11A-	27067GT	SEAL,SHAFT-SUNDSTRAND*** for 88884	
11A-	106098GT	SEAL KIT,MOTOR,LC/KC*** for 88884	
11B	88887GT	WHEEL DRIVE 56:1 2WD TYPE: RR. 4WD models (to SN S6012-23571) Visually identify which hub before ordering parts. ID tag is on end cover cap. Hubs are not interchangable, internal components are different for each type.	2
11B-	102126GT	SEAL KIT,DRIVE HUB (88887) for 88886. Lip seal comes in seal kit, not available individually.	
11B-	102131GT	DISCONNECT KIT (88887) for 88886. Comes with disconnect rod, cover, and mounting screws.	
11B-	102162GT	LUG,STUD/WHEEL (88887) for 88886. Clipped style head.	
11B-	102157GT	O-RING,.070 X .239,VITON 75D for 88886	
11B-	102163GT	RING,RETAINING*** for 88886	
11B-	102164GT	COVER,END,KIT (88887) for 88886. Includes disconnect cover and drain plug o-ring; order 102864 drain plugs separately.	
11B-	102684GT	PLUG,DRAIN,RR TRANS.DRIVE HUBS for 88886. Plug comes with o-ring; o-ring not available separately.	
11B-	215340GT	LOCKRING, RR for 88886	

201.3 Steer End (from SN 26296), S-60

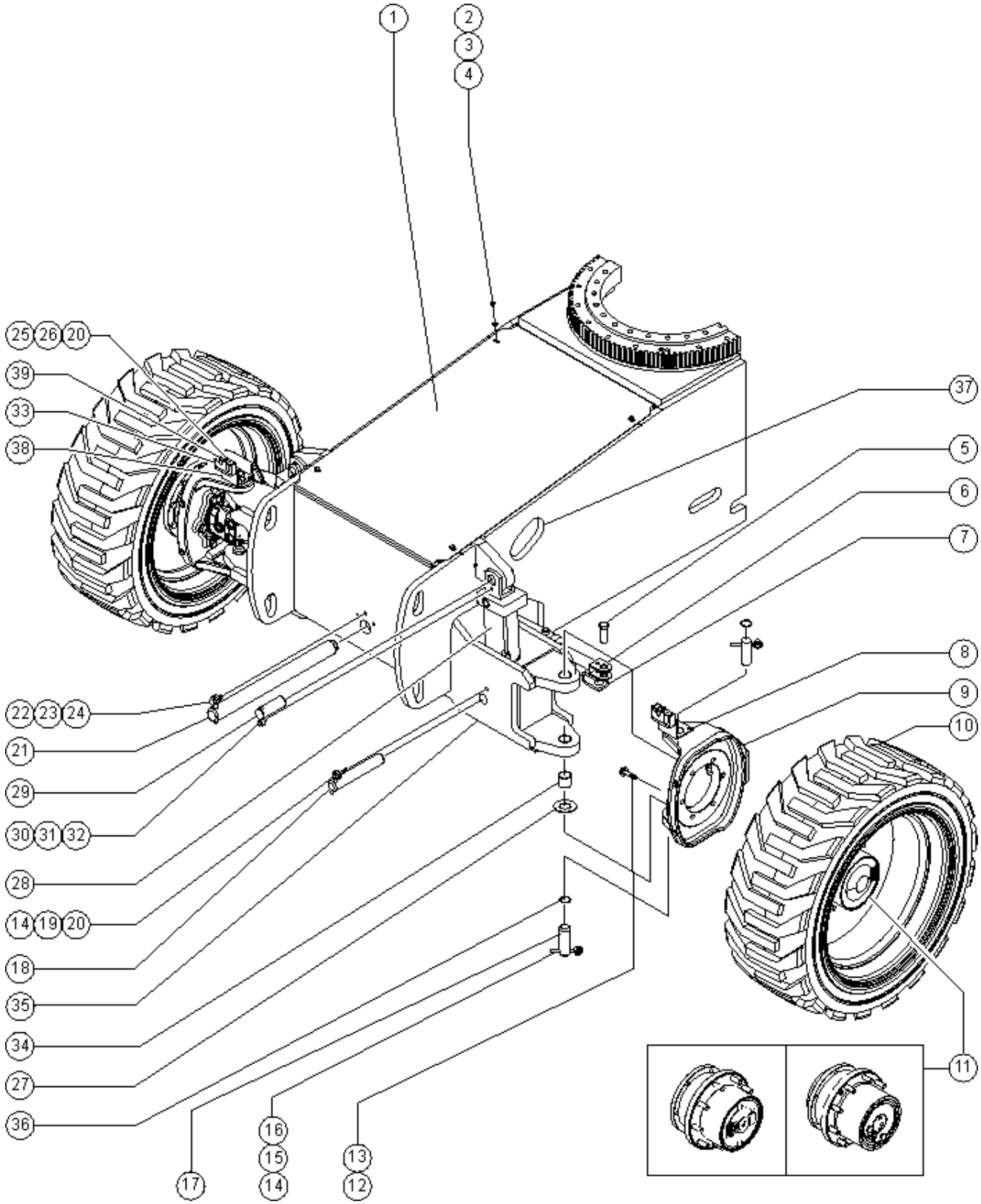

Item	Part No.	Description	Qty.
11B-	102166GT	VALVE,CHECK,30 PSI for 88886	
11B-	102167GT	SHAFT,INPUT DRIVE HUB for 88886	
11B-	215642GT	BRAKE KIT (88886)*** for 88886	
11B-	1274613GT	HUB SCREW for 88887	
11B-	102516GT	RING,RETAINING,INTERNAL for 88886	
11C		WHEEL DRIVE 57.5:1 4WD TYPE: OMNI. 4WD models (from SN S6012-23572) PN 231612 REPLACED OMNIGEAR WHEEL DRIVE PN 229702	2
11C-	139965GT	WHEEL STUD,5/8-18,OMNI*** for 229702	
11C-	139966GT	ROD,DISCONNECT,OMNI*** for 229702	
11C-	139967GT	CAP,DISENGAGE,OMNI*** for 229702	
11C-	139968GT	O-RING,END COVER,OMNI*** for 229702	
11C-	139969GT	LINING KIT,BRAKE,OMNI*** for 229702	
11C-	139970GT	SEAL KIT,BRAKE,OMNI*** for 229702	
11C-	139971GT	BEARING KIT,OMNI*** for 229702	
11C-	139972GT	SEAL KIT,GEARBOX,OMNI*** for 229702	
11C-	147033GT	O-RING,PIPE PLUG KIT,OMNI*** for 229702	
11C-	147034GT	PIPE PLUG KIT,OMNI*** for 229702	
11C-	1260084GT	END CAP, WHEEL DRIVE for 229702	
11D	229817GT	WHEEL DRIVE 56:1 (Trax, from SN S6012-23891)	1
11D-	102162GT	LUG,STUD/WHEEL (88887)	
11D-	102131GT	DISCONNECT KIT (88887)	
11D-	229818GT	SEAL KIT, DRIVE HUB	
11D-	215340GT	LOCKRING, RR replaced 102165	
11D-	102516GT	RING,RETAINING,INTERNAL	
11D-	215642GT	BRAKE KIT (88886)*** replaced 102168	
11D-	229931GT	SEAL,LIP	
11E	231612GT	WHEEL DRIVE,W/BRAKE 4WD	2
11E-	102158GT	O-RING,.103 X 4.737,VITON, 75D	
11E-	106117GT	O-RING,2-010,VITON	

201.3 Steer End (from SN 26296), S-60

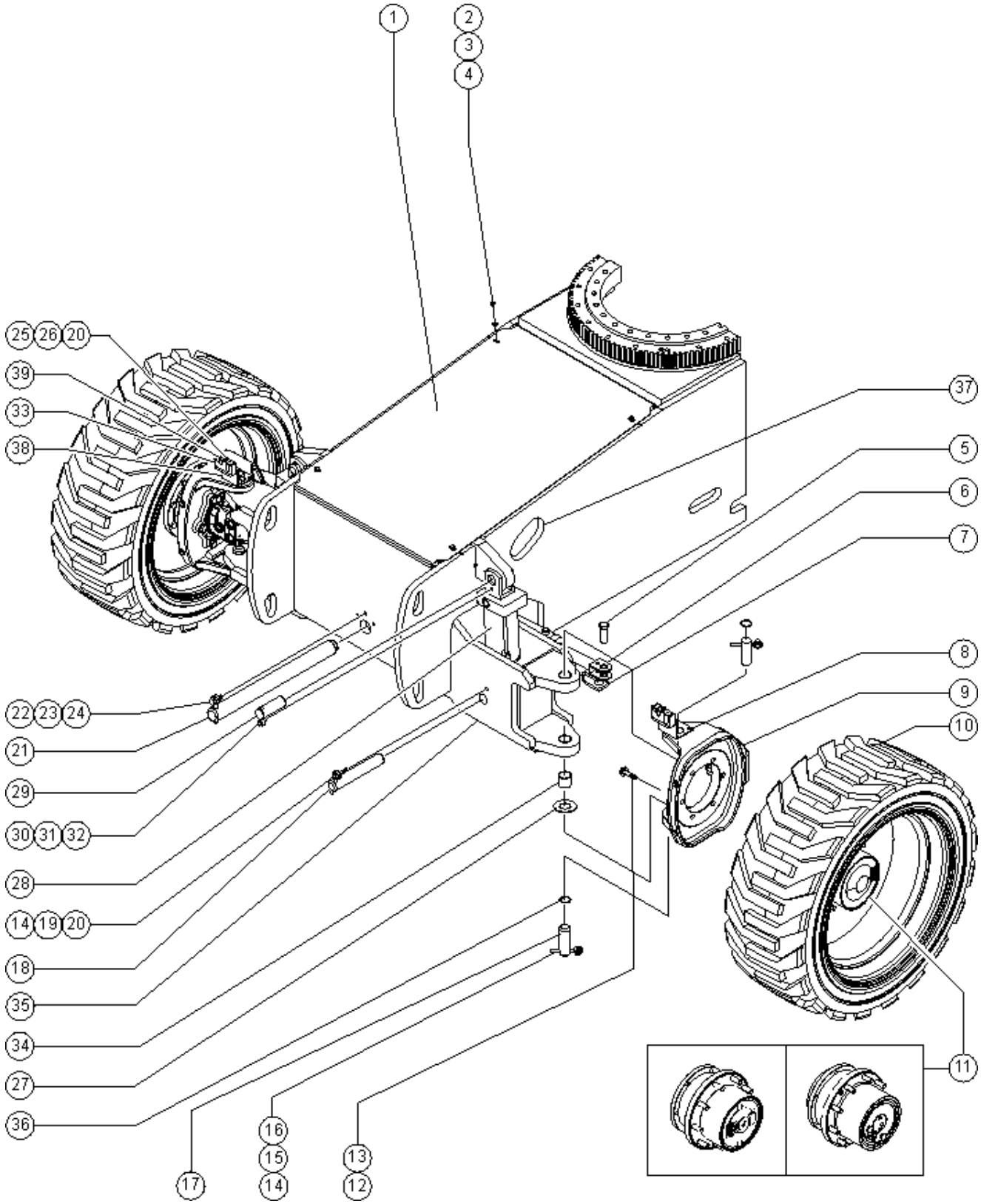

Item	Part No.	Description	Qty.
11E-	230849GT	WHEEL STUD,5/8-18X67MM	
11E-	139966GT	ROD,DISCONNECT,OMNI***	
11E-	139967GT	CAP,DISENGAGE,OMNI***	
11E-	139968GT	O-RING,END COVER,OMNI***	
11E-	139969GT	LINING KIT,BRAKE,OMNI***	
11E-	139970GT	SEAL KIT,BRAKE,OMNI***	
11E-	139971GT	BEARING KIT,OMNI***	
11E-	139972GT	SEAL KIT,GEARBOX,OMNI***	
11E-	147033GT	O-RING,PIPE PLUG KIT,OMNI***	
11E-	147034GT	PIPE PLUG KIT,OMNI***	
11E-	1260082GT	SPRING, HELICAL, RH	
12	73455GT	SCREW,HHC,5/8-11 X 2.25 GR8	12
13	13064GT	WASHER,FLAT,.625 HARDENED	12
14	825019GT	ROD END, .375X3.69, ZAG	
15	8255GT	SCREW,HHC,3/8-16 X .75	
16	6021GT	WASHER, LOCK, .375	
17	110221GT	PIN,GROOVE/HOLE,1.50 DIAX4.475	4
18	77880GT	PIN,1.50DIAX9.38LG,1HOLE	2
19	5224GT	SCREW,HHC,3/8-16 X 2	
20	4828GT	NUT, NYLOCK, 3/8-16	
21	77610GT	PIN,2.00DIAX23.13LG,CHAMFER	1
22	1256267GT	ROD END,.5 X 3.75,ZAG	
23	8177GT	SCREW,HHC,1/2-13 X 1.5	
24	6033GT	WASHER,LOCK,0.5"	
25	6326GT	SCREW,HHC,3/8-16 X 3	
26	6097GT	WASHER, FLAT, USS, 3/8", Y	
27	45074GT	WASHER,THRUST,1.5 X 3.5 X .187	2
28	110578GT	CYLINDER,OSCILLATE,S60	2

201.3 Steer End (from SN 26296), S-60

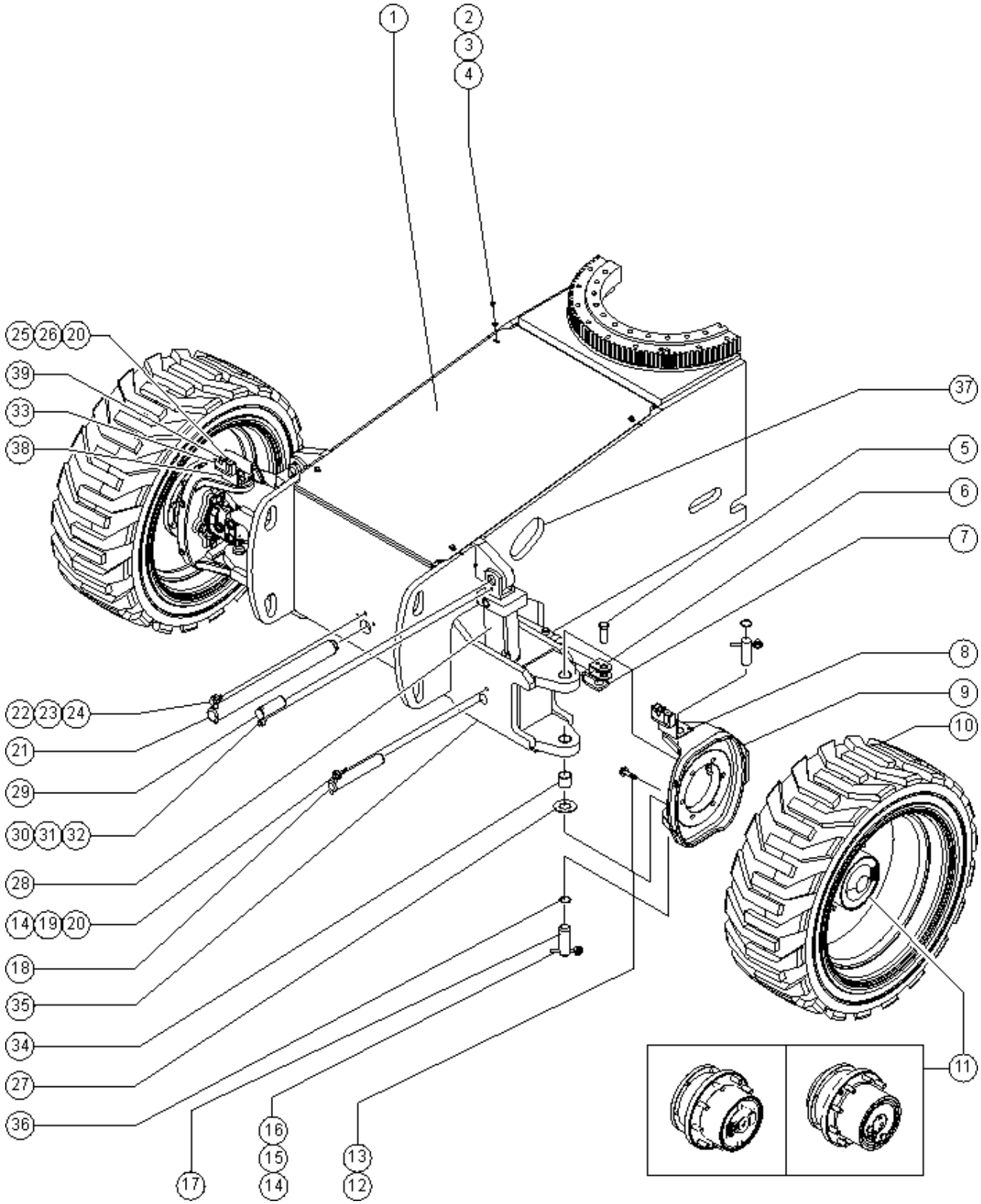

201.3 Steer End (from SN 26296), S-60

Item	Part No.	Description	Qty.
28-	33428GT	VALVE,COUNTERBALANCE	
28-	89295GT	SEAL KIT,CYLINDER (63189)	
29	94221GT	PIN,1.50DIAX3.75LG,1HOLE	2
30	1255452GT	ROD END,.375 X 2.25,ZAG	
31	6021GT	WASHER, LOCK, .375	
32	6175GT	SCREW,HHC,3/8-16 X 1	
33	106516GT	CLAMP,HOSE,2X4,1X6,2X8***	2
34	45071GT	BEARING,1.5IDX1.75ODX1.5L included with 119145GT	
35	119146GT	AXLE ASSEMBLY,S60 FRONT Includes item 34	1
35-	42014GT	BEARING,2.00IDX2.25ODX2.00L not included with 119145GT; order seperately	2
36	825796GT	SNAP RING,EXTERNAL,1.50,ZAG	
37	53386GT	GUARD, HOSE PROTECTOR	1
38	107616PGT	BRACKET,HOSE ROUTING,RH,PNTD	1
39	106517PGT	CLAMP TOP,HOSE ROUTING PAINTED	2

201.4 Steer End (from SN 26296), S-65

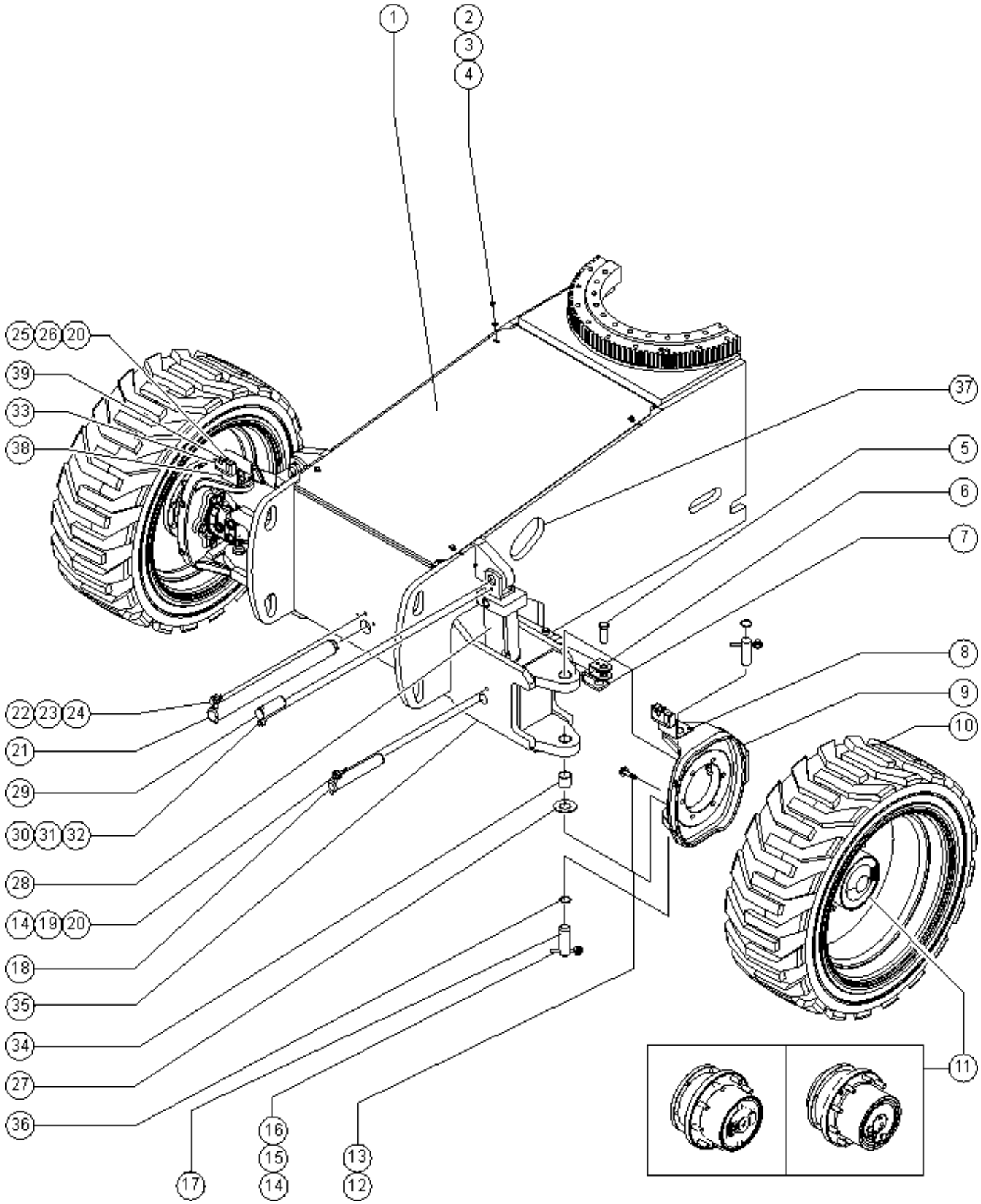

201.4 Steer End (from SN 26296), S-65

Item	Part No.	Description	Qty.
1	94507GT	COVER, WITH DECALS, STEER END*	
2	7339GT	SCREW,HHC,1/4-20 X .5	
3	6638GT	WASHER, FLAT, USS, 1/4"Y	
4	56912GT	SPRING CLIP,1/4-20,.025-.15X.54,ZAG	
5	19440GT	PIN,CLEVIS,1 X 2.5 LG	6
5-	74389GT	RUE RING 1.00	
6	59460GT	CYLINDER,STEERING***	2
6-	89294GT	SEAL KIT CYLINDER (59460)	
7	77643GT	TIE ROD WELDMENT,S60	1
8	107615PGT	BRACKET,HOSE ROUTING,LH,PTD	1
9	77726GT	YOKE ASSEMBLY W/BEARINGS,LH	
9-	77725GT	YOKE ASSEMBLY W/BEARINGS,RH	
9-	25817GT	BEARING,1.00IDX1.25ODX1.00L	
10A	88729GT	TIRE & WHEEL ASSY,AIR,RH*** RT, Air-filled, right (S-60,S-65,S-60X)	2
10A	88730GT	TIRE & WHEEL ASSY,AIR,LH RT, Air-filled, left (S-60,S-65,S-60X)	2
10A-	88727GT	WHEEL, 24.5X11.75, 9 X 9 BCD for 88730 & 88729	
10A-	88728GT	TIRE,355/55D625 for 88730 & 88729	
10B	77790GT	TIRE & WHEEL ASSY, RH, 355/55D625, FF RT, Foam-filled, right (S-60,S-65,S-60X,S-60XC,S-60HC; overall diameter: 37 inches)	2
10B	77791GT	TIRE & WHEEL ASSY, LH, 355/55D625, FF RT, Foam-filled, left (S-60,S-65,S-60X,S-60XC,S-60HC; overall diameter: 37 inches)	2
10C	94332GT	TIRE & WHEEL ASSY,TURF SPEC*** Turf, Air-filled (S-60,S-65,S-60X)	4
10C-	94333GT	WHEEL,22.5X14.00*** for 94332	
10C-	81164GT	TIRE,41/18LL X 22.5,14PR,TURF* for 94332	
10D	94534GT	WHEEL & TIRE ASSY,RH,NM AIR RT, Air-filled, Non-marking, right (S-60,S-65,S-60X)	2
10D	94535GT	WHEEL & TIRE ASSY,LH NM AIR RT, Air-filled, Non-marking, left (S-60,S-65,S-60X)	2
10D-	88727GT	WHEEL, 24.5X11.75, 9 X 9 BCD for 94534 & 94535	
10D-	94536GT	TIRE,355/55D625,14 PLY,NM for 94534 & 94535	
10E	106647GT	TIRE & WHEEL ASSY,RH,FOAM,NM RT, Foam-filled, Non-marking, right (S-60,S-65,S-60X,S-60XC,S-60HC; overall diameter: 37 inches)	2

201.4 Steer End (from SN 26296), S-65

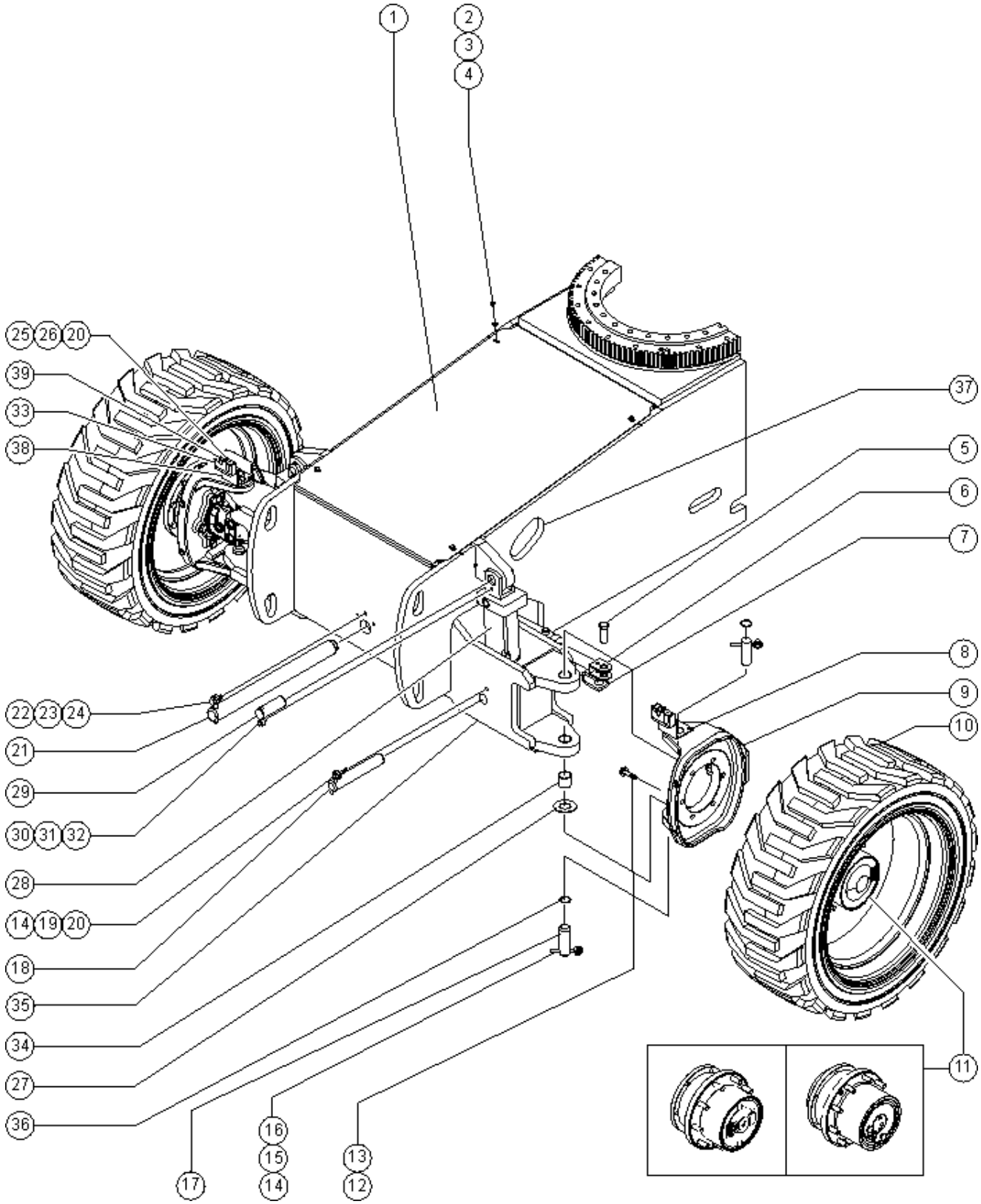

201.4 Steer End (from SN 26296), S-65

Item	Part No.	Description	Qty.
10E	106648GT	TIRE & WHEEL ASSY,LH,FOAM,NM RT, Foam-filled, Non-marking, left (S-60,S-65,S-60X,S-60XC,S-60HC; overall diameter: 37 inches)	2
10F	110727GT	TIRE/WHEEL ASSY,LP RT W/SEALAN RT, Air-filled, with sealant, left (S-60,S-65,S-60X)	2
10F	110728GT	TIRE/WHEEL ASSY,LP RT W/SEALAN RT, Air-filled, with sealant, right (S-60,S-65,S-60X)	2
10G	110730GT	TIRE/WHEEL ASSY,LP NM W/SEALAN RT, Air-filled, Non-marking, with sealant, right (S-60,S-65,S-60X)	2
10G	110731GT	TIRE/WHEEL ASSY,LP NM W/SEALAN RT, Air-filled, Non-marking, with sealant, left (S-60,S-65,S-60X)	2
10H	110733GT	TIRE/WHEEL ASSY,HF W/SEALANT Turf, Air-filled, with sealant (S-60,S-65,S-60X)	4
10J	228768GT	TIRE/WH ASSY,RH,FF,REPNEU RT, Foam-filled, oil based (S-60, S-65,S-60X,S-60XC,S-60HC)	2
10J	228769GT	TIRE/WH ASSY,LH,FF,REPNEU*** RT, Foam-filled, oil based (S-60, S-65,S-60X,S-60XC,S-60HC)	2
11A	88884GT	MOTOR,PISTON,30CC,4WD*** 4WD models (to SN S6012-23571) Visually identify which hub before ordering parts. ID tag is on end cover cap. Hubs are not interchangable, internal components are different for each type. All four hubs must be the same to avoid damage.	2
11A-	72290GT	SNAP RING(M46 UNITS)* for 88884	
11A-	102158GT	O-RING,.103 X 4.737,VITON, 75D for 88884	
11A-	102159GT	SHAFT,15 TOOTH for 88884	
11A-	102155GT	BEARING,BALL DRIVE SHAFT for 88884	
11A-	27067GT	SEAL,SHAFT-SUNDSTRAND*** for 88884	
11A-	106098GT	SEAL KIT,MOTOR,LC/KC*** for 88884	
11B	88887GT	WHEEL DRIVE 56:1 2WD TYPE: FAIRFIELD. 4WD Models (from SN S6012-23572) Visually identify which hub before ordering parts. ID tag is on end cover cap. Hubs are not interchangable, internal components are different for each type. All four hubs must be the same to avoid damage.	2
11B-	102126GT	SEAL KIT,DRIVE HUB (88887) for 88886. Lip seal comes in seal kit, not available individually.	
11B-	102131GT	DISCONNECT KIT (88887) for 88886. Comes with disconnect rod, cover, and mounting screws.	
11B-	102162GT	LUG,STUD/WHEEL (88887) for 88886. Clipped style head.	
11B-	102157GT	O-RING,.070 X .239,VITON 75D for 88886	
11B-	102163GT	RING,RETAINING*** for 88886	
11B-	102164GT	COVER,END,KIT (88887) for 88886. Includes disconnect cover and drain plug o-ring; order 102864 drain plugs separately.	
11B-	102684GT	PLUG,DRAIN,RR TRANS.DRIVE HUBS for 88886. Plug comes with o-ring; o-ring not available separately.	
11B-	215340GT	LOCKRING, RR for 88886	
11B-	102166GT	VALVE,CHECK,30 PSI for 88886	
11B-	102167GT	SHAFT,INPUT DRIVE HUB for 88886	

201.4 Steer End (from SN 26296), S-65

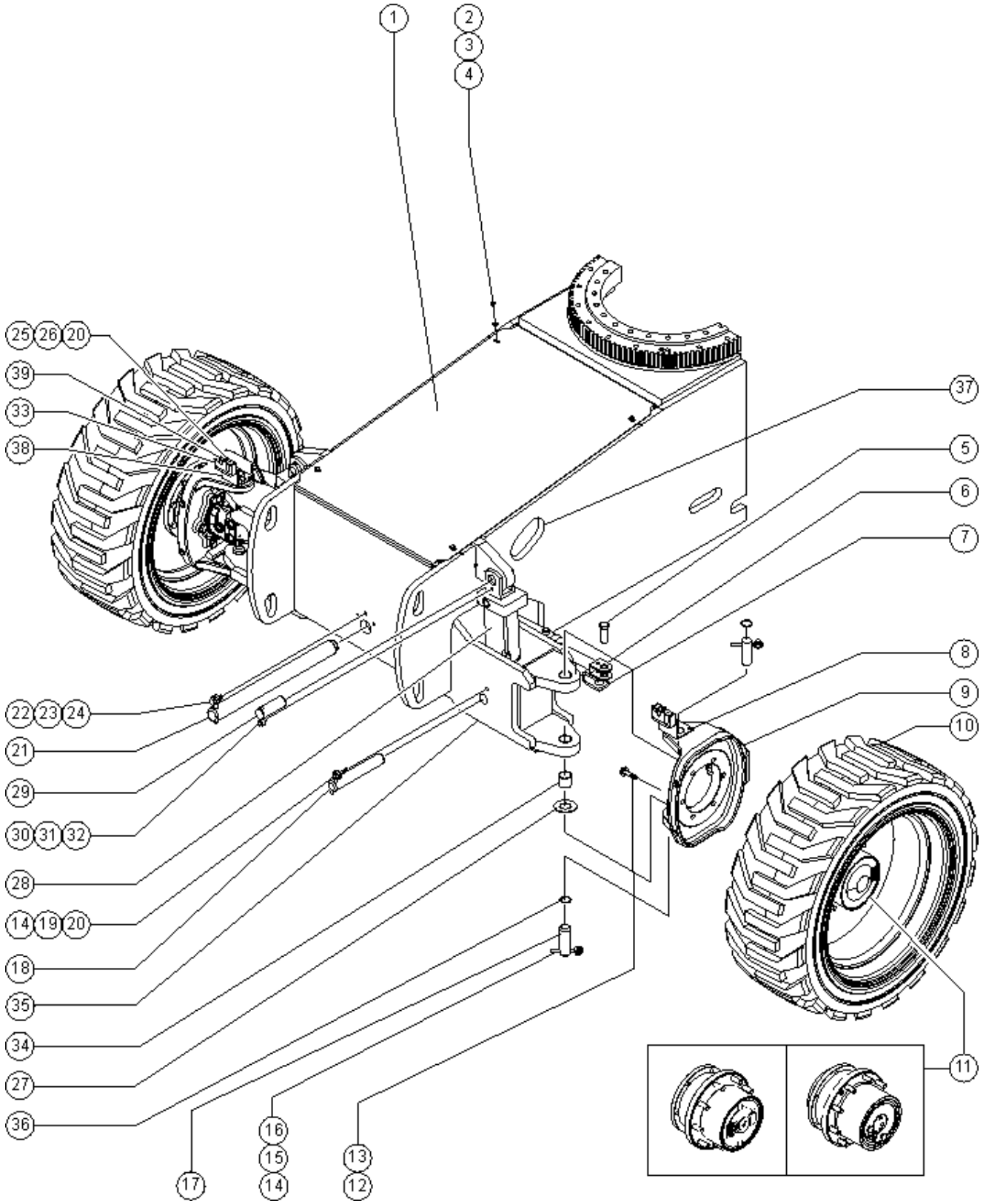

201.4 Steer End (from SN 26296), S-65

Item	Part No.	Description	Qty.
11B-	215642GT	BRAKE KIT (88886)*** for 88886	
11B-	102516GT	RING,RETAINING,INTERNAL for 88886	
11C		WHEEL DRIVE 57.5:1 4WD TYPE: OMNI. 4WD Models (from SN S6012-23572) PN 231612 REPLACED OMNIGEAR WHEEL DRIVE PN 229702	2
11C-	139965GT	WHEEL STUD,5/8-18,OMNI*** for 229702	
11C-	139966GT	ROD,DISCONNECT,OMNI*** for 229702	
11C-	139967GT	CAP,DISENGAGE,OMNI*** for 229702	
11C-	139968GT	O-RING,END COVER,OMNI*** for 229702	
11C-	139969GT	LINING KIT,BRAKE,OMNI*** for 229702	
11C-	139970GT	SEAL KIT,BRAKE,OMNI*** for 229702	
11C-	139971GT	BEARING KIT,OMNI*** for 229702	
11C-	139972GT	SEAL KIT,GEARBOX,OMNI*** for 229702	
11C-	147033GT	O-RING,PIPE PLUG KIT,OMNI*** for 229702	
11C-	147034GT	PIPE PLUG KIT,OMNI*** for 229702	
11C-	1260084GT	END CAP, WHEEL DRIVE for 229702	
11D	229817GT	WHEEL DRIVE 56:1 (Trax, from SN S6012-23891)	1
11D-	102162GT	LUG,STUD/WHEEL (88887)	
11D-	102131GT	DISCONNECT KIT (88887)	
11D-	229818GT	SEAL KIT, DRIVE HUB	
11D-	215340GT	LOCKRING, RR	
11D-	102516GT	RING,RETAINING,INTERNAL	
11D-	215642GT	BRAKE KIT (88886)***	
11D-	229931GT	SEAL,LIP	
11E	231612GT	WHEEL DRIVE,W/BRAKE 4WD	2
11E-	102158GT	O-RING,.103 X 4.737,VITON, 75D	
11E-	106117GT	O-RING,2-010,VITON	
11E-	230849GT	WHEEL STUD,5/8-18X67MM	
11E-	139966GT	ROD,DISCONNECT,OMNI***	
11E-	139967GT	CAP,DISENGAGE,OMNI***	

201.4 Steer End (from SN 26296), S-65

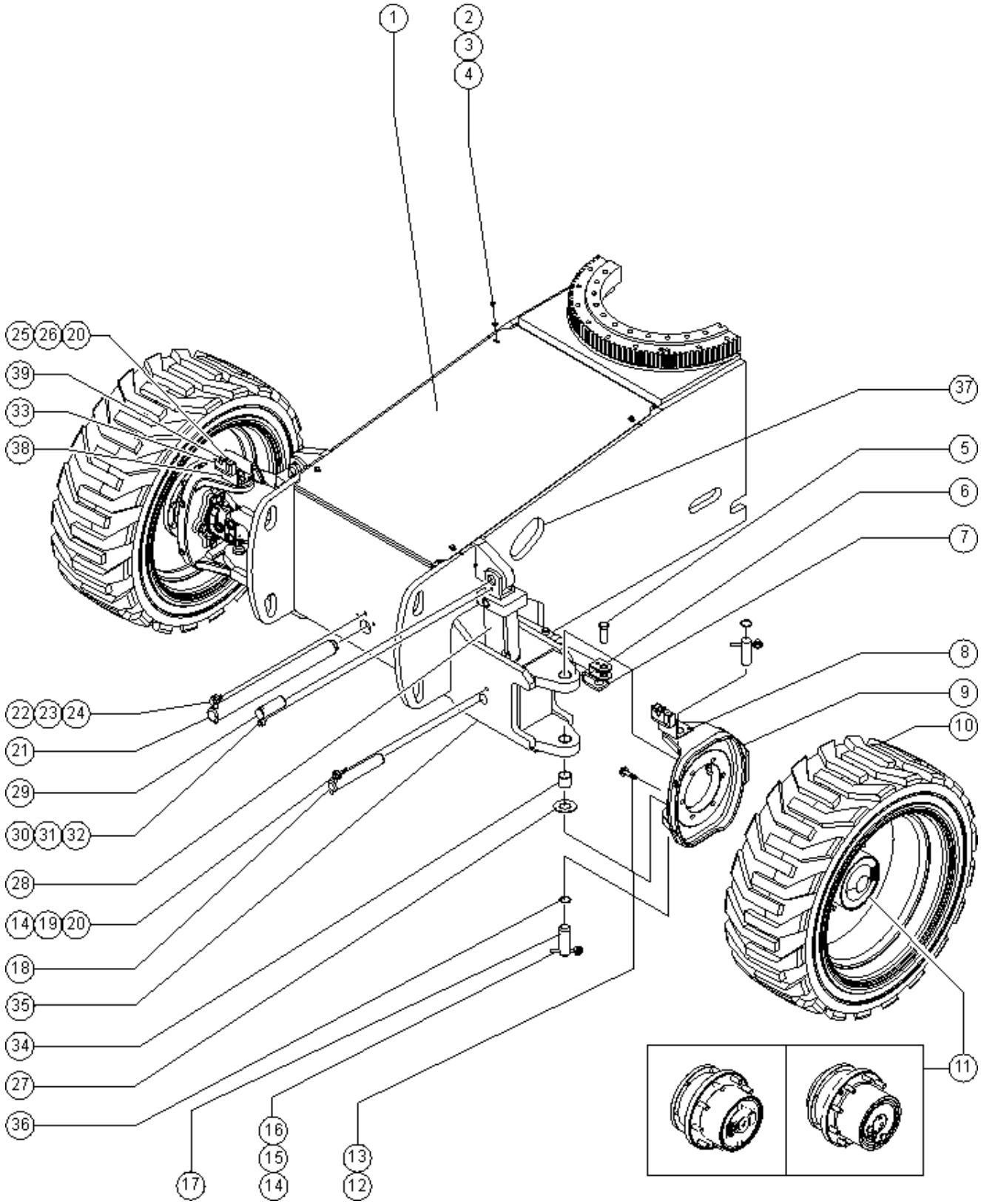

Item	Part No.	Description	Qty.
11E-	139968GT	O-RING,END COVER,OMNI***	
11E-	139969GT	LINING KIT,BRAKE,OMNI***	
11E-	139970GT	SEAL KIT,BRAKE,OMNI***	
11E-	139971GT	BEARING KIT,OMNI***	
11E-	139972GT	SEAL KIT,GEARBOX,OMNI***	
11E-	147033GT	O-RING,PIPE PLUG KIT,OMNI***	
11E-	147034GT	PIPE PLUG KIT,OMNI***	
11E-	1260082GT	SPRING, HELICAL, RH	
12	73455GT	SCREW,HHC,5/8-11 X 2.25 GR8	12
13	13064GT	WASHER,FLAT,.625 HARDENED	12
14	825019GT	ROD END, .375X3.69, ZAG	
15	8255GT	SCREW,HHC,3/8-16 X .75	
16	6021GT	WASHER, LOCK, .375	
17	110221GT	PIN,GROOVE/HOLE,1.50 DIAX4.475	4
18	77880GT	PIN,1.50DIAX9.38LG,1HOLE	2
19	5224GT	SCREW,HHC,3/8-16 X 2	
20	4828GT	NUT, NYLOCK, 3/8-16	
21	77610GT	PIN,2.00DIAX23.13LG,CHAMFER	1
22	1256267GT	ROD END,.5 X 3.75,ZAG	
23	8177GT	SCREW,HHC,1/2-13 X 1.5	
24	6033GT	WASHER,LOCK,0.5"	
25	6326GT	SCREW,HHC,3/8-16 X 3	
26	6097GT	WASHER, FLAT, USS, 3/8", Y	
27	45074GT	WASHER,THRUST,1.5 X 3.5 X .187	2
28	110578GT	CYLINDER,OSCILLATE,S60	2
28-	33428GT	VALVE,COUNTERBALANCE	
28-	89295GT	SEAL KIT,CYLINDER (63189)	
29	94221GT	PIN,1.50DIAX3.75LG,1HOLE	2

201.4 Steer End (from SN 26296), S-65

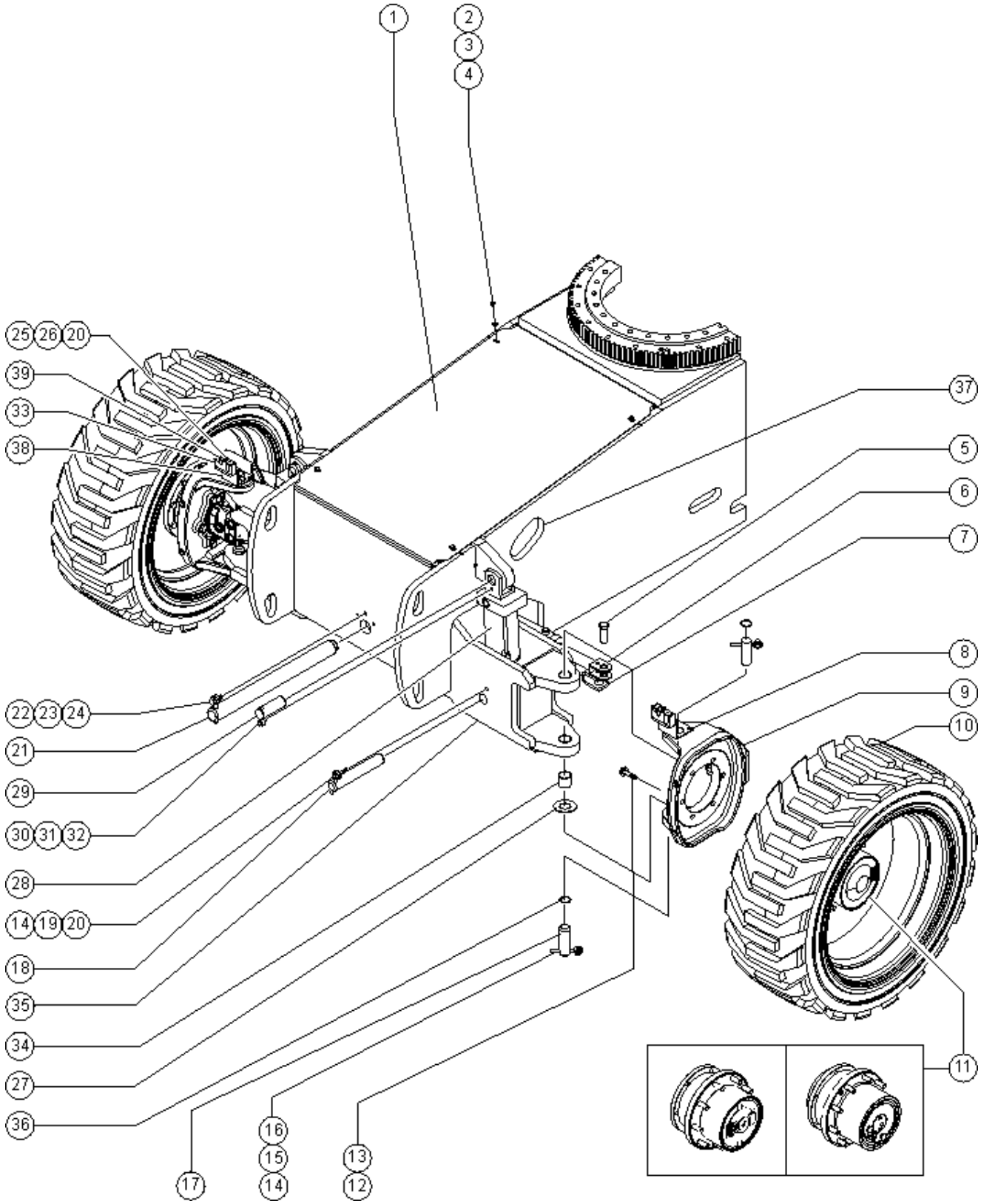

201.4 Steer End (from SN 26296), S-65

Item	Part No.	Description	Qty.
30	1255452GT	ROD END,.375 X 2.25,ZAG	
31	6021GT	WASHER, LOCK, .375	
32	6175GT	SCREW,HHC,3/8-16 X 1	
33	106516GT	CLAMP,HOSE,2X4,1X6,2X8***	2
34	45071GT	BEARING,1.5IDX1.75ODX1.5L	
35	119146GT	AXLE ASSEMBLY,S60 FRONT Includes item 34	1
35-	42014GT	BEARING,2.00IDX2.25ODX2.00L	2
36	825796GT	SNAP RING,EXTERNAL,1.50,ZAG	
37	53386GT	GUARD, HOSE PROTECTOR	1
38	107616PGT	BRACKET,HOSE ROUTING,RH,PNTD	1
39	106517PGT	CLAMP TOP,HOSE ROUTING PAINTED	2

202.1 Non-steer End, S-60

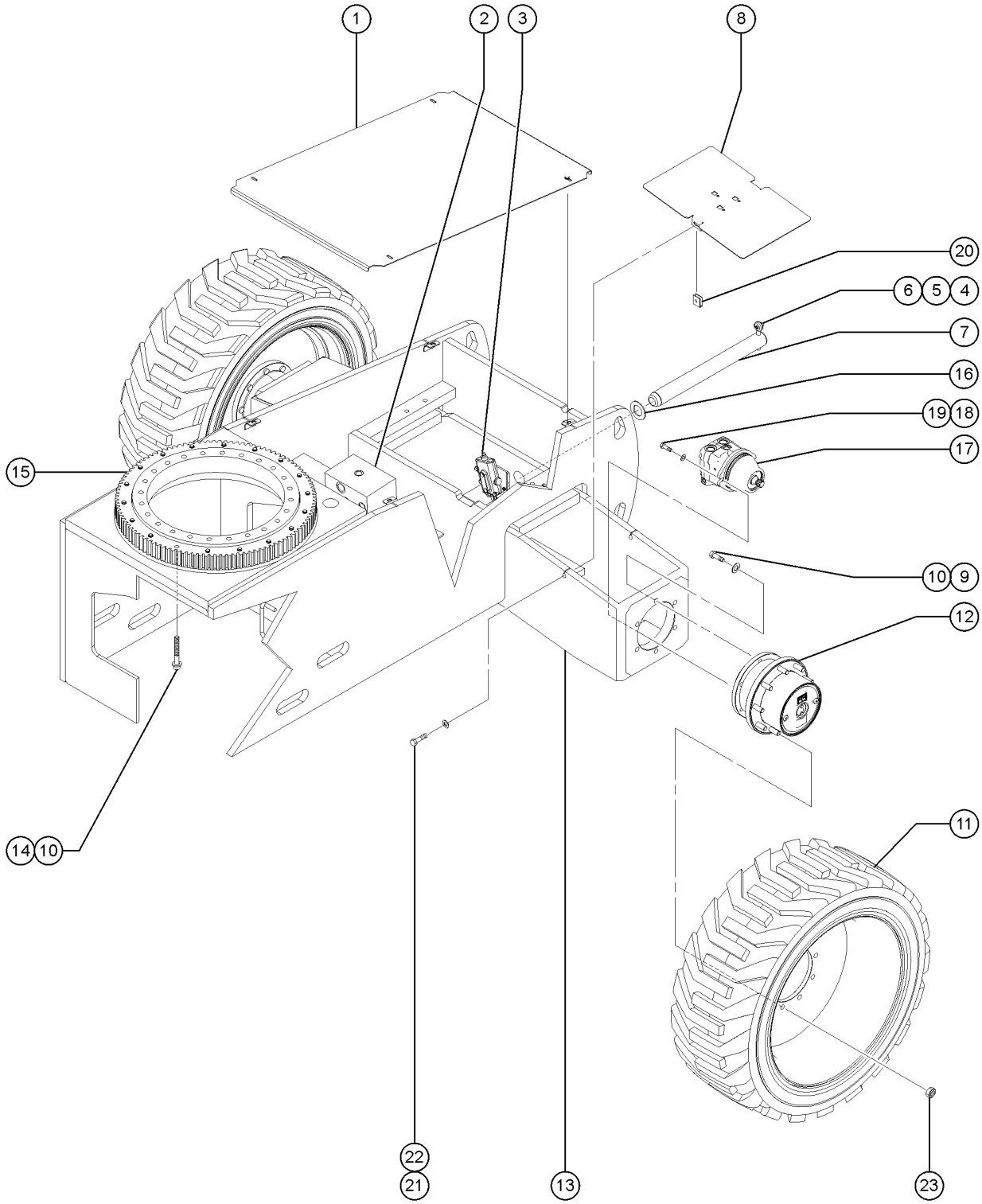

202.1 Non-steer End, S-60

Item	Part No.	Description	Qty.
1	94508GT	COVER, W/DECALS, NONSTEER END*	
2		Ref. Traction Manifold (refer to 402.1 & 402.2)	
3		Ref. Oscillate Valve (refer to 203.1)	
4	1256267GT	ROD END,.5 X 3.75,ZAG	
5	6175GT	SCREW,HHC,3/8-16 X 1	
6	6021GT	WASHER, LOCK, .375	
7	77950GT	PIN,2.00DIAX20.88LG,CHAMFER	
8	77623PGT	COVER,REAR AXLE	
9	73455GT	SCREW,HHC,5/8-11 X 2.25 GR8	
10	13064GT	WASHER,FLAT,.625 HARDENED	
11		REF. WHEEL AND TIRE ASSEMBLY refer to 201.1	
12A	88887GT	WHEEL DRIVE 56:1 2WD TYPE: RR. 4WD Models (to SN S6012-23572) Visually identify which hub before ordering parts. ID tag is on end cover cap. Internal components are different for each type.	1
12A-	102126GT	SEAL KIT,DRIVE HUB (88887) for 88886 and 88887	
12A-	102131GT	DISCONNECT KIT (88887) for 88886 and 88887	
12A-	215642GT	BRAKE KIT (88886)*** for 88886 and 88887	
12A-	102163GT	RING,RETAINING*** for 88886 and 88887	
12A-	215340GT	LOCKRING, RR for 88886 and 88887	
12A-	102167GT	SHAFT,INPUT DRIVE HUB for 88886 and 88887	
12A-	102162GT	LUG,STUD/WHEEL (88887) for 88886 and 88887	
12A-	102516GT	RING,RETAINING,INTERNAL for 88886 and 88887	
12A-	102164GT	COVER,END,KIT (88887) for 88886. Includes disconnect cover and drain plug o-ring; order 102864 drain plugs separately.	
12A-	102684GT	PLUG,DRAIN,RR TRANS.DRIVE HUBS for 88886. Plug comes with o-ring; o-ring not available separately.	
12B	88887GT	WHEEL DRIVE 56:1 2WD 2WD models; not shown	1
12B-	102126GT	SEAL KIT,DRIVE HUB (88887) for 88886 and 88887	
12B-	102131GT	DISCONNECT KIT (88887) for 88886 and 88887	
12B-	215642GT	BRAKE KIT (88886)*** for 88886 and 88887	
12B-	102163GT	RING,RETAINING*** for 88886 and 88887	

202.1 Non-steer End, S-60

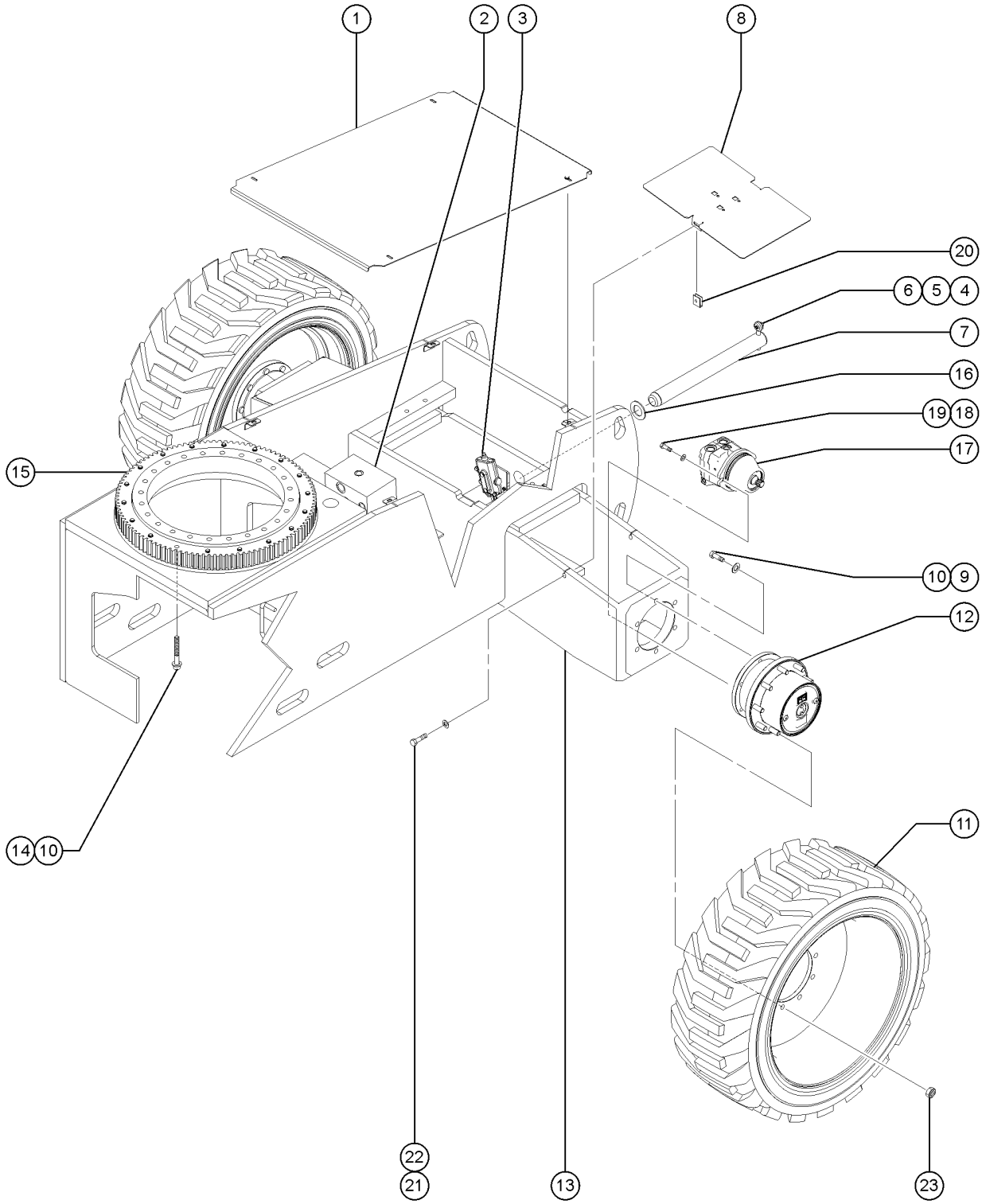

Item	Part No.	Description	Qty.
12B-	215340GT	LOCKRING, RR for 88886 and 88887	
12B-	102167GT	SHAFT,INPUT DRIVE HUB for 88886 and 88887	
12B-	102162GT	LUG,STUD/WHEEL (88887) for 88886 and 88887	
12B-	102516GT	RING,RETAINING,INTERNAL for 88886 and 88887	
12B-	102126GT	SEAL KIT,DRIVE HUB (88887) for 88886 and 88887	1
12B-	1274613GT	HUB SCREW for 88887	
12C		WHEEL DRIVE 57.5:1 4WD TYPE: OMNI. 4WD Models (from SN S6012-23572) PN 231612 REPLACED OMNIGEAR WHEEL DRIVE PN 229702	
12C-	139965GT	WHEEL STUD,5/8-18,OMNI*** for 229702	
12C-	139966GT	ROD,DISCONNECT,OMNI*** for 229702	
12C-	139967GT	CAP,DISENGAGE,OMNI*** for 229702	
12C-	139968GT	O-RING,END COVER,OMNI*** for 229702	
12C-	139969GT	LINING KIT,BRAKE,OMNI*** for 229702	
12C-	139970GT	SEAL KIT,BRAKE,OMNI*** for 229702	
12C-	139971GT	BEARING KIT,OMNI*** for 229702	
12C-	139972GT	SEAL KIT,GEARBOX,OMNI*** for 229702	
12C-	147033GT	O-RING,PIPE PLUG KIT,OMNI*** for 229702	
12C-	147034GT	PIPE PLUG KIT,OMNI*** for 229702	
12C	1260084GT	END CAP, WHEEL DRIVE for 229702	
12D	229817GT	WHEEL DRIVE 56:1 (trax, from SN S6012-23891)	2
12D-	102162GT	LUG,STUD/WHEEL (88887) (trax, from SN S6012-23891)	
12D-	102131GT	DISCONNECT KIT (88887) (trax, from SN S6012-23891)	
12D-	229818GT	SEAL KIT, DRIVE HUB (trax, from SN S6012-23891)	
12D-	215340GT	LOCKRING, RR (trax, from SN S6012-23891); replaced 102165	
12D-	102516GT	RING,RETAINING,INTERNAL (trax, from SN S6012-23891)	
12D-	215642GT	BRAKE KIT (88886)*** (trax, from SN S6012-23891); replaced 102168	
12D-	229931GT	SEAL,LIP (trax, from SN S6012-23891)	
12D-	102157GT	O-RING,.070 X .239,VITON 75D (trax, from SN S6012-23891)	
12D-	102158GT	O-RING,.103 X 4.737,VITON, 75D (trax, from SN S6012-23891)	

202.1 Non-steer End, S-60

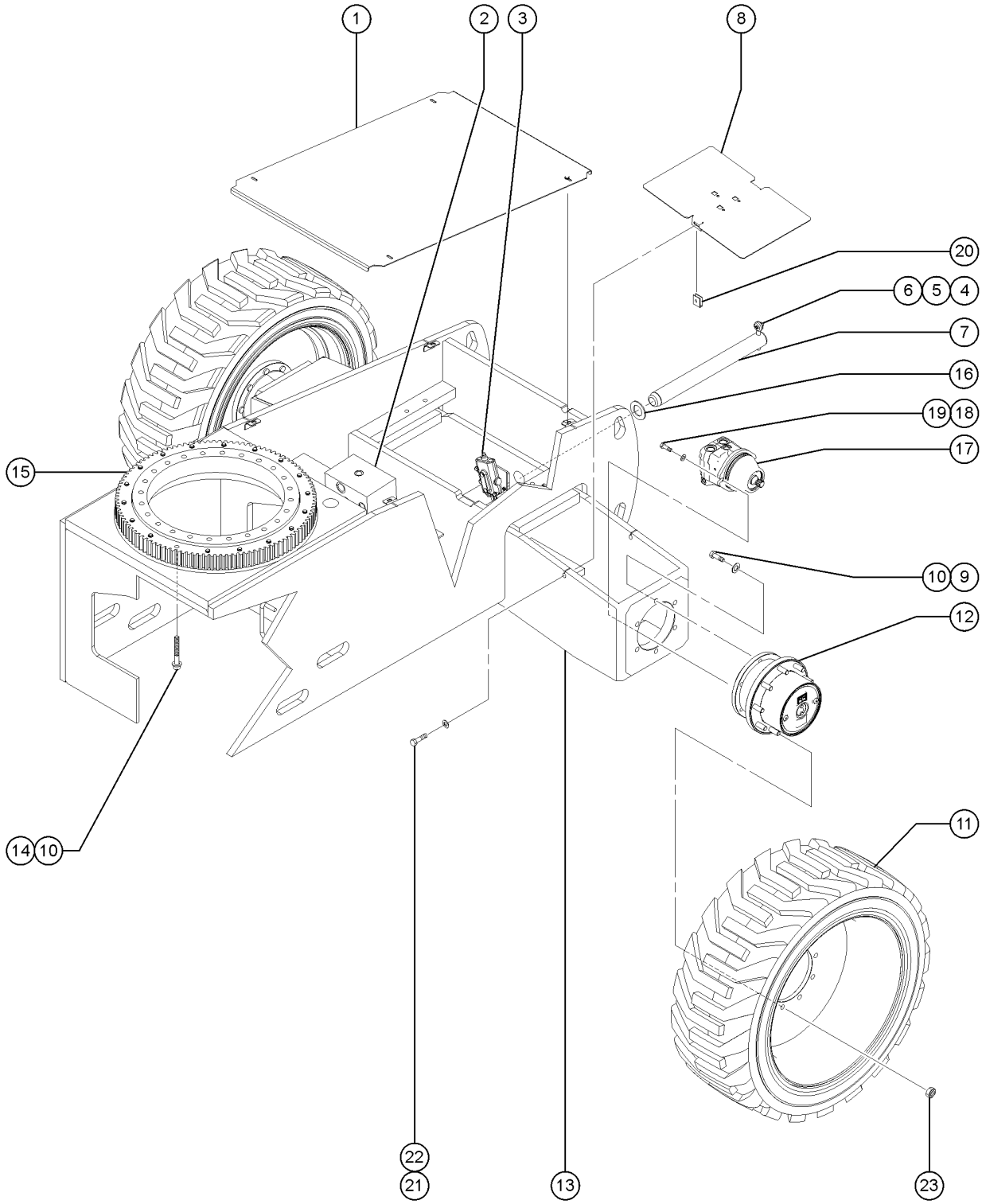

Item	Part No.	Description	Qty.
12D-	102166GT	VALVE,CHECK,30 PSI (trax, from SN S6012-23891)	
12D-	102167GT	SHAFT,INPUT DRIVE HUB (trax, from SN S6012-23891)	
12D-	106098GT	SEAL KIT,MOTOR,LC/KC*** (trax, from SN S6012-23891)	
12D-	27067GT	SEAL,SHAFT-SUNDSTRAND*** (trax, from SN S6012-23891)	
12D-	77674GT	NUT,HEX,FLANGE 5/8-18,GRD 8 ZI (trax, from SN S6012-23891)	
12D-	88884GT	MOTOR,PISTON,30CC,4WD*** (trax, from SN S6012-23891)	
12E	231612GT	WHEEL DRIVE,W/BRAKE 4WD	2
12E-	102158GT	O-RING,.103 X 4.737,VITON, 75D	
12E-	106117GT	O-RING,2-010,VITON	
12E-	230849GT	WHEEL STUD,5/8-18X67MM	
12E-	139966GT	ROD,DISCONNECT,OMNI***	
12E-	139967GT	CAP,DISENGAGE,OMNI***	
12E-	139968GT	O-RING,END COVER,OMNI***	
12E-	139969GT	LINING KIT,BRAKE,OMNI***	
12E-	139970GT	SEAL KIT,BRAKE,OMNI***	
12E-	139971GT	BEARING KIT,OMNI***	
12E-	139972GT	SEAL KIT,GEARBOX,OMNI***	
12E-	147033GT	O-RING,PIPE PLUG KIT,OMNI***	
12E-	147034GT	PIPE PLUG KIT,OMNI***	
12E-	1260082GT	SPRING, HELICAL, RH	
13	1283533GT	WELDMENT, REAR AXLE	1
13-	42014GT	BEARING,2.00IDX2.25ODX2.00L for 88885	
14	139865GT	SCREW,HHC,5/8-11 X 4.00 GR8 BO for 88885	18
15	63468GT	BEARING,TURNTABLE ROTATION for 88885	
15-	227785GT	BEARING TURNTABLE SEAL***	
16	18730GT	WASHER,FLAT,2.01 X 3.5 X .06	
17A	88884GT	MOTOR,PISTON,30CC,4WD***	
17A-	72290GT	SNAP RING(M46 UNITS)*	

202.1 Non-steer End, S-60

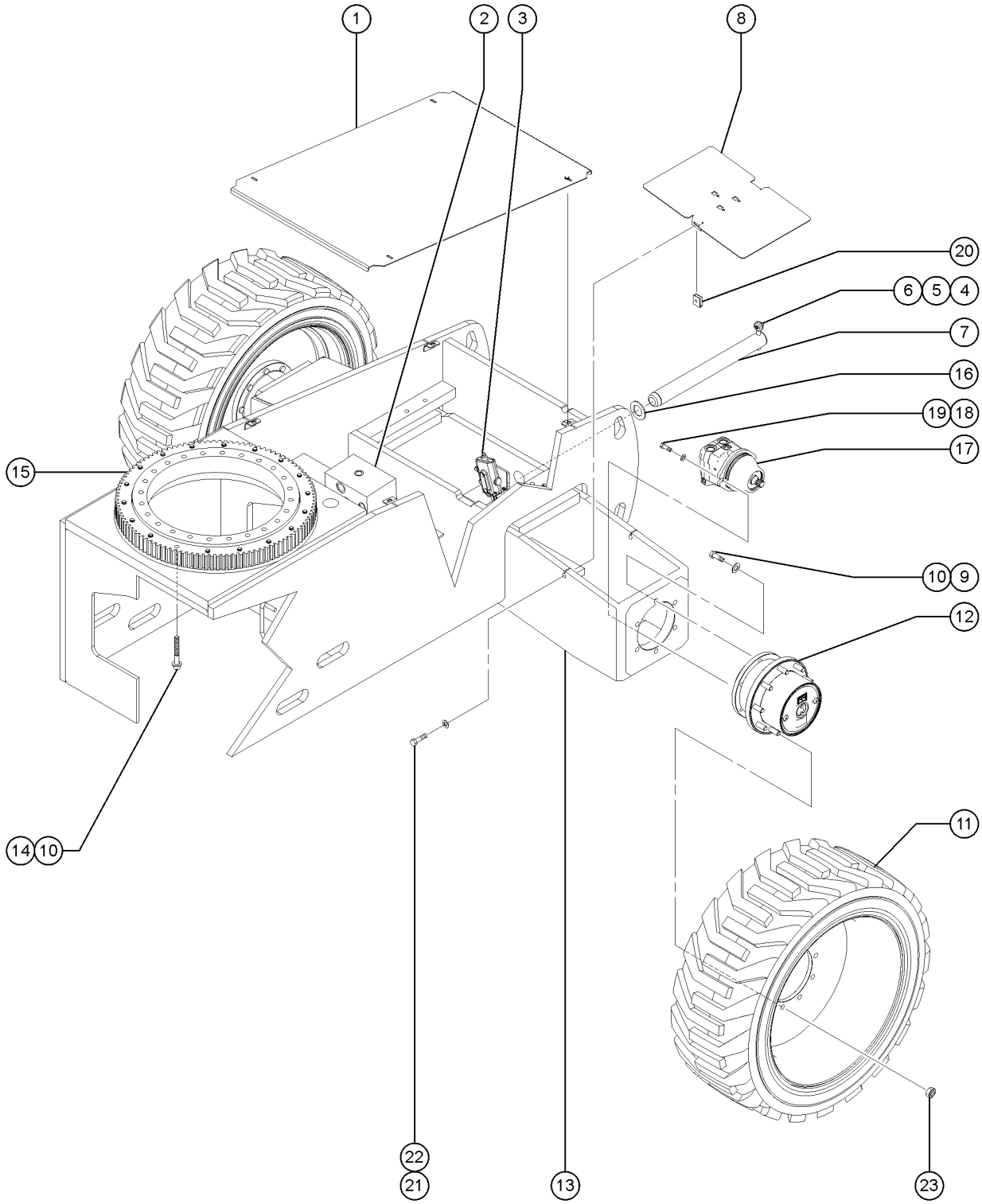

Item	Part No.	Description	Qty.
17A-	102159GT	SHAFT,15 TOOTH	
17A-	102155GT	BEARING,BALL DRIVE SHAFT	
17A-	27067GT	SEAL,SHAFT-SUNDSTRAND***	
17A-	106098GT	SEAL KIT,MOTOR,LC/KC*** for 88884	
17A-	102158GT	O-RING,.103 X 4.737,VITON, 75D for 88884	
17B	88885GT	MOTOR,PISTON,35CC,2WD*** 2WD models, not shown	2
17B-	72290GT	SNAP RING(M46 UNITS)* for 88885	
17B-	102159GT	SHAFT,15 TOOTH for 88885	
17B-	102155GT	BEARING,BALL DRIVE SHAFT for 88885	
17B-	27067GT	SEAL,SHAFT-SUNDSTRAND*** for 88885	
17B-	106098GT	SEAL KIT,MOTOR,LC/KC*** for 88885	
17B-	106117GT	O-RING,2-010,VITON for 88885 (Mating O-ring for Brake Port)(Extremely small)	
17B-	102158GT	O-RING,.103 X 4.737,VITON, 75D for 88885	
18	88296GT	SCREW,HHC,7/16-14 X 1.25	4
19	119988GT	WASHER,.469 X .781,HRD	4
20	56912GT	SPRING CLIP,1/4-20,.025-.15X.54,ZAG	
21	6090GT	SCREW, HHC, 1/4-20 X .75	
22	6638GT	WASHER, FLAT, USS, 1/4"Y	
23	77674GT	NUT,HEX,FLANGE 5/8-18,GRD 8 ZI	18

202.2 Non-steer End, S-65

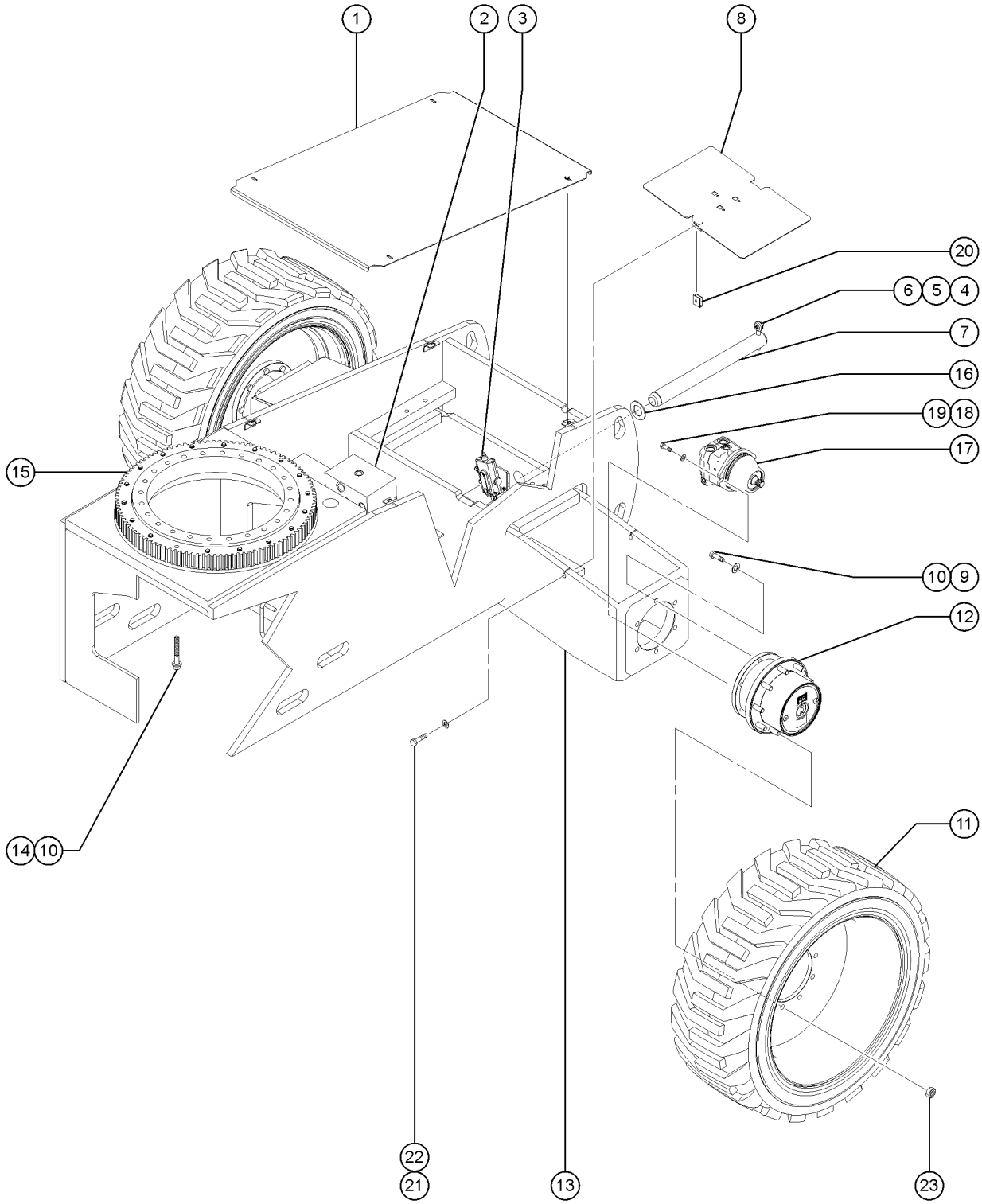

Item	Part No.	Description	Qty.
1	94508GT	COVER, W/DECALS, NONSTEER END*	
2		Ref. Traction Manifold (refer to 402.1 & 402.2)	
3		Ref. Oscillate Valve (refer to 203.1)	
4	1256267GT	ROD END,.5 X 3.75,ZAG	
5	6175GT	SCREW,HHC,3/8-16 X 1	
6	6021GT	WASHER, LOCK, .375	
7	77950GT	PIN,2.00DIAX20.88LG,CHAMFER	
8	77623PGT	COVER,REAR AXLE	
9	73455GT	SCREW,HHC,5/8-11 X 2.25 GR8	
10	13064GT	WASHER,FLAT,.625 HARDENED	
11		REF. WHEEL AND TIRE ASSEMBLY (refer to 201.1)	
12A	88887GT	WHEEL DRIVE 56:1 2WD TYPE: RR. 4WD Models (to SN S6012-23572) Visually identify which hub before ordering parts. ID tag is on end cover cap. Internal components are different for each type.	1
12A-	102126GT	SEAL KIT,DRIVE HUB (88887) for 88886 and 88887	
12A-	102131GT	DISCONNECT KIT (88887) for 88886 and 88887	
12A-	215642GT	BRAKE KIT (88886)*** for 88886 and 88887	
12A-	102163GT	RING,RETAINING*** for 88886 and 88887	
12A-	215340GT	LOCKRING, RR for 88886 and 88887	
12A-	102167GT	SHAFT,INPUT DRIVE HUB for 88886 and 88887	
12A-	102162GT	LUG,STUD/WHEEL (88887) for 88886 and 88887	
12A-	102516GT	RING,RETAINING,INTERNAL for 88886 and 88887	
12A-	102164GT	COVER,END,KIT (88887) for 88886. Includes disconnect cover and drain plug o-ring; order 102864 drain plugs separately.	
12A-	102684GT	PLUG,DRAIN,RR TRANS.DRIVE HUBS for 88886. Plug comes with o-ring; o-ring not available separately.	
12B	88887GT	WHEEL DRIVE 56:1 2WD 2WD models; not shown	1
12B-	102126GT	SEAL KIT,DRIVE HUB (88887) for 88886 and 88887	
12B-	102131GT	DISCONNECT KIT (88887) for 88886 and 88887	
12B-	215642GT	BRAKE KIT (88886)*** for 88886 and 88887	
12B-	102163GT	RING,RETAINING*** for 88886 and 88887	

202.2 Non-steer End, S-65

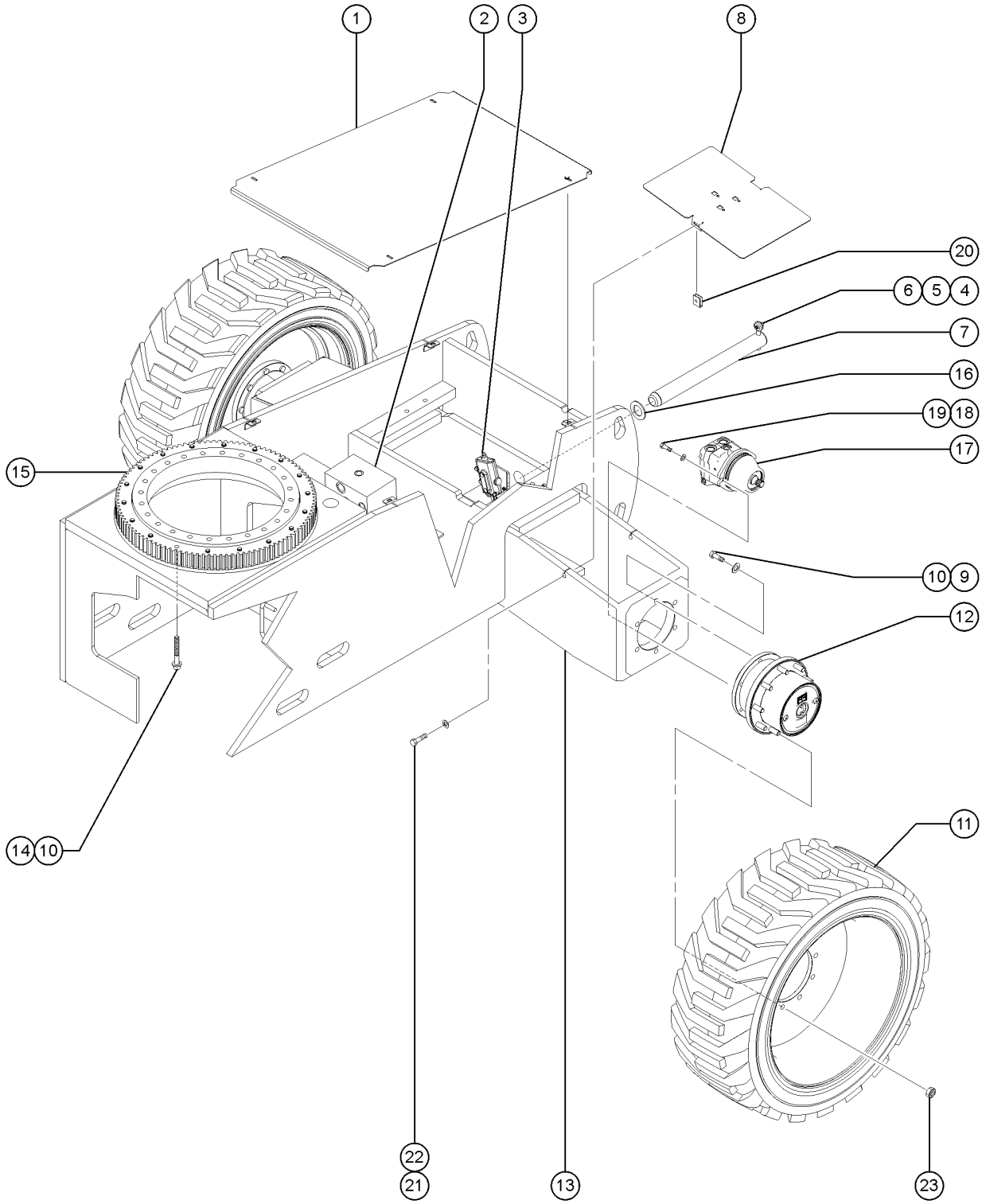

Item	Part No.	Description	Qty.
12B-	215340GT	LOCKRING, RR for 88886 and 88887	
12B-	102167GT	SHAFT,INPUT DRIVE HUB for 88886 and 88887	
12B-	102162GT	LUG,STUD/WHEEL (88887) for 88886 and 88887	
12B-	102516GT	RING,RETAINING,INTERNAL for 88886 and 88887	
12C		WHEEL DRIVE 57.5:1 4WD TYPE: OMNI. 4WD Models (from SN S6012-23572) PN 231612 REPLACED OMNIGEAR WHEEL DRIVE PN 229702	
12C-	139965GT	WHEEL STUD,5/8-18,OMNI*** for 229702	
12C-	139966GT	ROD,DISCONNECT,OMNI*** for 229702	
12C-	139967GT	CAP,DISENGAGE,OMNI*** for 229702	
12C-	139968GT	O-RING,END COVER,OMNI*** for 229702	
12C-	139969GT	LINING KIT,BRAKE,OMNI*** for 229702	
12C-	139970GT	SEAL KIT,BRAKE,OMNI*** for 229702	
12C-	139971GT	BEARING KIT,OMNI*** for 229702	
12C-	139972GT	SEAL KIT,GEARBOX,OMNI*** for 229702	
12C-	147033GT	O-RING,PIPE PLUG KIT,OMNI*** for 229702	
12C-	147034GT	PIPE PLUG KIT,OMNI*** for 229702	
12C-	1260084GT	END CAP, WHEEL DRIVE for 229702	
12D	229817GT	WHEEL DRIVE 56:1 (trax, from SN S6012-23891)	1
12D-	102131GT	DISCONNECT KIT (88887) (trax, from SN S6012-23891)	
12D-	229818GT	SEAL KIT, DRIVE HUB (trax, from SN S6012-23891)	
12D-	215340GT	LOCKRING, RR (trax, from SN S6012-23891)	
12D-	102516GT	RING,RETAINING,INTERNAL (trax, from SN S6012-23891)	
12D-	229931GT	SEAL,LIP (trax, from SN S6012-23891)	
12D-	102157GT	O-RING,.070 X .239,VITON 75D (trax, from SN S6012-23891)	
12D-	102158GT	O-RING,.103 X 4.737,VITON, 75D (trax, from SN S6012-23891)	
12D-	102166GT	VALVE,CHECK,30 PSI (trax, from SN S6012-23891)	
12D-	102167GT	SHAFT,INPUT DRIVE HUB (trax, from SN S6012-23891)	
12D-	106098GT	SEAL KIT,MOTOR,LC/KC*** (trax, from SN S6012-23891)	
12D-	27067GT	SEAL,SHAFT-SUNDSTRAND*** (trax, from SN S6012-23891)	

202.2 Non-steer End, S-65

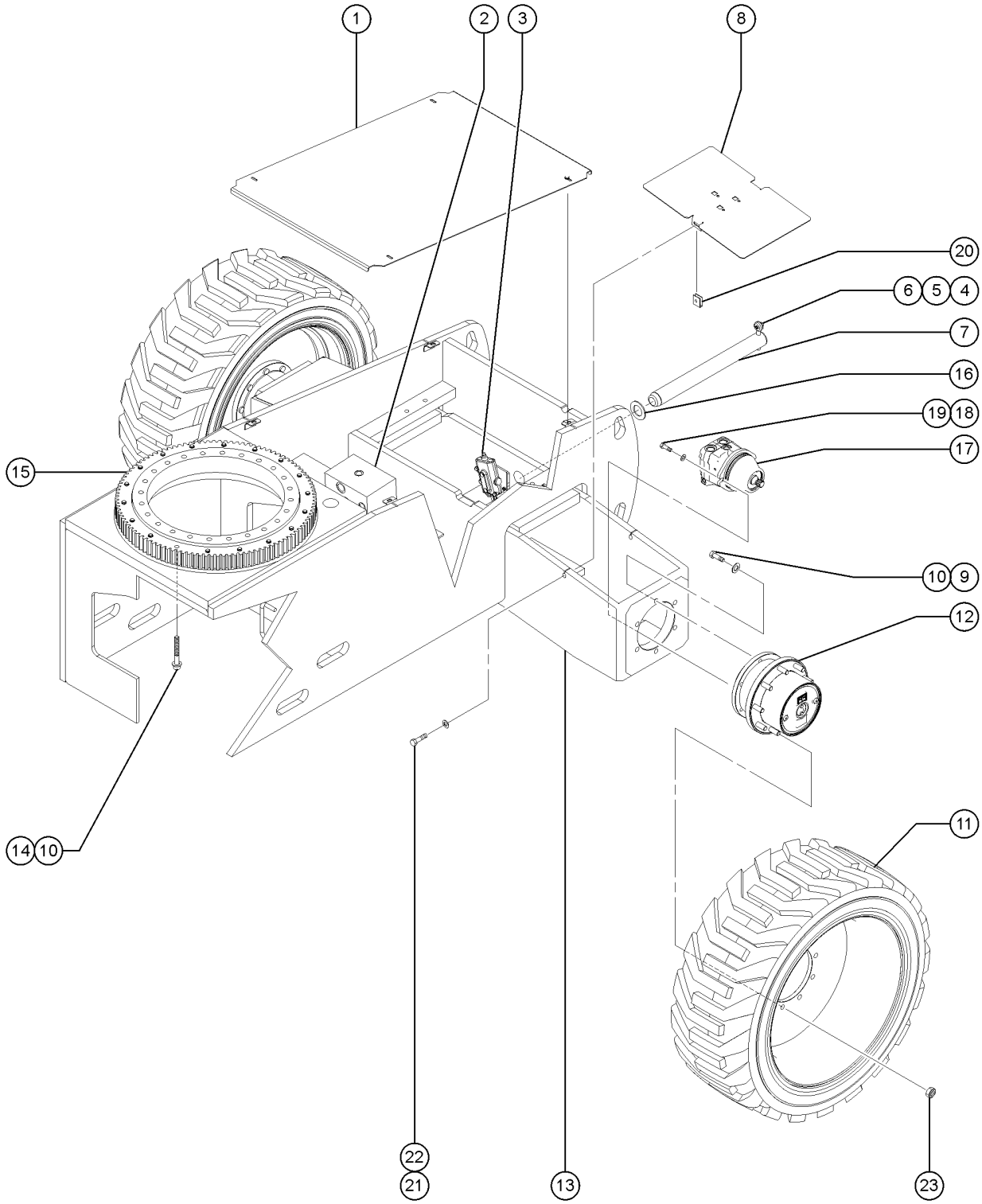

Item	Part No.	Description	Qty.
12D-	77674GT	NUT,HEX,FLANGE 5/8-18,GRD 8 ZI (trax, from SN S6012-23891)	
12D-	88884GT	MOTOR,PISTON,30CC,4WD*** (trax, from SN S6012-23891)	
12E	231612GT	WHEEL DRIVE,W/BRAKE 4WD	2
12E-	102158GT	O-RING,.103 X 4.737,VITON, 75D	
12E-	106117GT	O-RING,2-010,VITON	
12E-	230849GT	WHEEL STUD,5/8-18X67MM	
12E-	139966GT	ROD,DISCONNECT,OMNI***	
12E-	139967GT	CAP,DISENGAGE,OMNI***	
12E-	139968GT	O-RING,END COVER,OMNI***	
12E-	139969GT	LINING KIT,BRAKE,OMNI***	
12E-	139970GT	SEAL KIT,BRAKE,OMNI***	
12E-	139971GT	BEARING KIT,OMNI***	
12E-	139972GT	SEAL KIT,GEARBOX,OMNI***	
12E-	147033GT	O-RING,PIPE PLUG KIT,OMNI***	
12E-	147034GT	PIPE PLUG KIT,OMNI***	
12E-	1260082GT	SPRING, HELICAL, RH	
13	1283533GT	WELDMENT, REAR AXLE	1
13-	42014GT	BEARING,2.00IDX2.25ODX2.00L for 88885	
14	139865GT	SCREW,HHC,5/8-11 X 4.00 GR8 BO for 88885	18
15	63468GT	BEARING,TURNTABLE ROTATION for 88885	
15-	227785GT	BEARING TURNTABLE SEAL***	
16	18730GT	WASHER,FLAT,2.01 X 3.5 X .06	
17A	88884GT	MOTOR,PISTON,30CC,4WD***	
17A-	72290GT	SNAP RING(M46 UNITS)*	
17A-	102159GT	SHAFT,15 TOOTH	
17A-	102155GT	BEARING,BALL DRIVE SHAFT	
17A-	27067GT	SEAL,SHAFT-SUNDSTRAND***	
17A-	106098GT	SEAL KIT,MOTOR,LC/KC*** for 88884	

202.2 Non-steer End, S-65

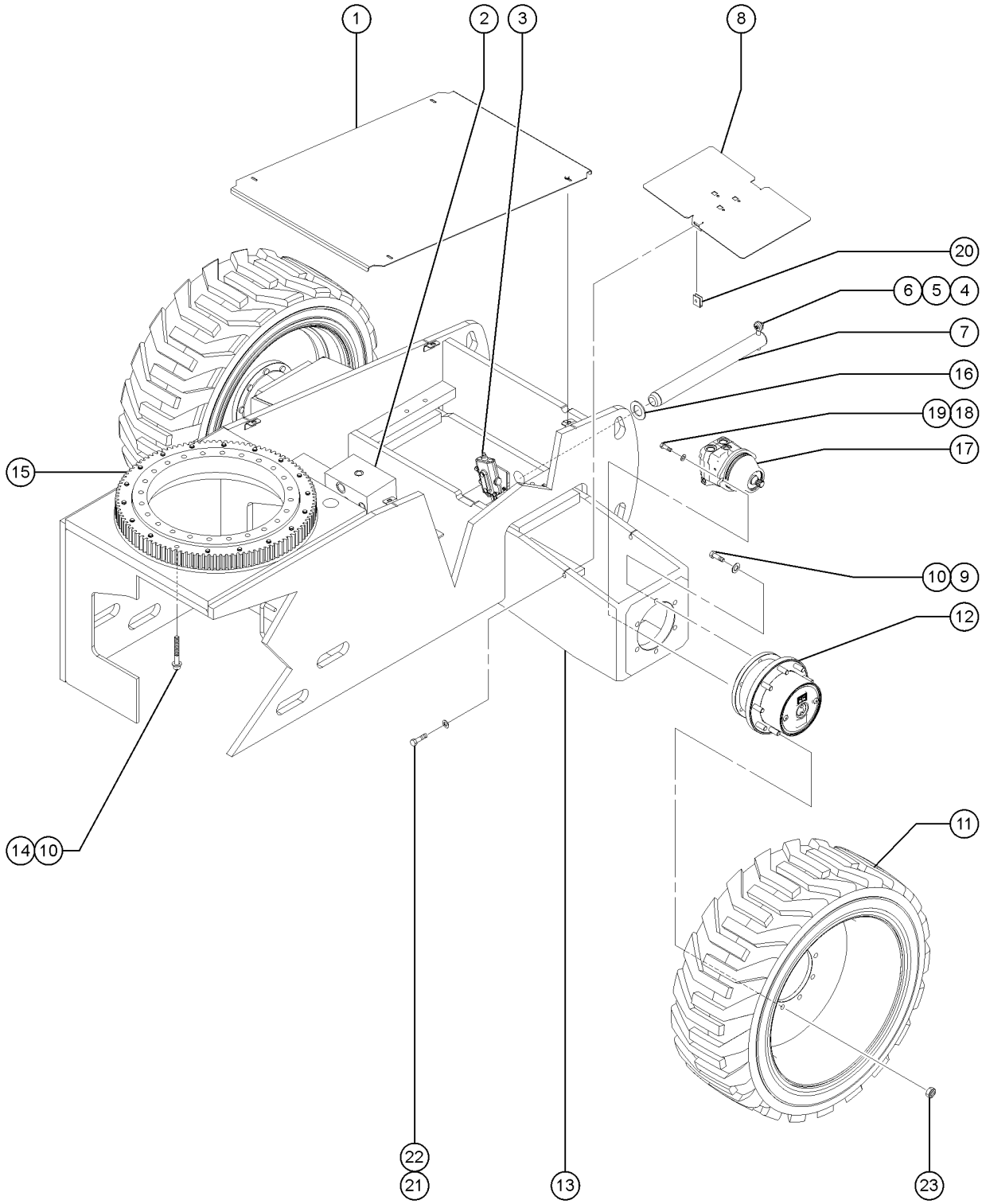

Item	Part No.	Description	Qty.
17A-	102158GT	O-RING,.103 X 4.737,VITON, 75D for 88884	
17B	88885GT	MOTOR,PISTON,35CC,2WD*** 2WD models, not shown	2
17B-	72290GT	SNAP RING(M46 UNITS)* for 88885	
17B-	102159GT	SHAFT,15 TOOTH for 88885	
17B-	102155GT	BEARING,BALL DRIVE SHAFT for 88885	
17B-	27067GT	SEAL,SHAFT-SUNDSTRAND*** for 88885	
17B-	106098GT	SEAL KIT,MOTOR,LC/KC*** for 88885	
17B-	106117GT	O-RING,2-010,VITON for 88885 (Mating O-ring for Brake Port)(Extremely small)	
17B-	102158GT	O-RING,.103 X 4.737,VITON, 75D for 88885	
18	88296GT	SCREW,HHC,7/16-14 X 1.25	4
19	119988GT	WASHER,.469 X .781,HRD	4
20	56912GT	SPRING CLIP,1/4-20,.025-.15X.54,ZAG	
21	6090GT	SCREW, HHC, 1/4-20 X .75	
22	6638GT	WASHER, FLAT, USS, 1/4"Y	
23	77674GT	NUT,HEX,FLANGE 5/8-18,GRD 8 ZI	18

203.1 Oscillate Valve, S-60

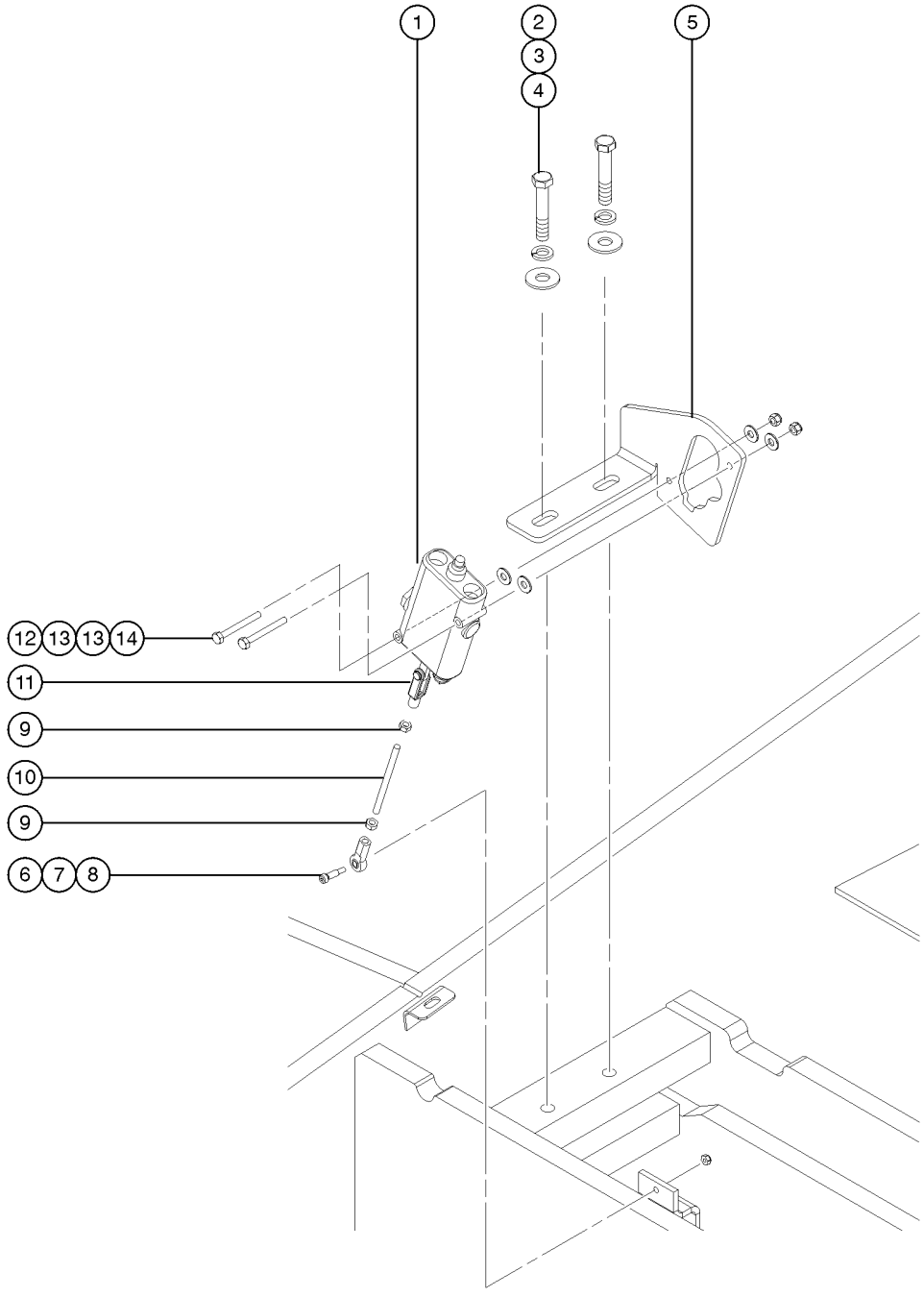

203.1 Oscillate Valve, S-60

Item	Part No.	Description	Qty.
1	81552GT	VALVE,MANUAL,W/RELIEF VALVE***	1
1-	32681GT	SEAL KIT,CONTROL VALVE for 81552	
2	39479GT	SCREW,HHC,1/2-13 X 2.75	2
3	6033GT	WASHER,LOCK,0.5"	2
4	6095GT	WASHER,FLAT,USS,1/2",Y	2
5	139578GT	BRACKET, OSCILLATE VALVE	1
6	6584GT	SCREW,SHS,10-24 X .625	1
7	81691GT	ROD END,BALL JOINT 1/4-28	1
8	5365GT	NUT,NYLOCK,10-24	1
9	21496GT	NUT,HEX,1/4-28	2
10	30785-400GT	THREADED ROD,1/4-28 X 4 IN***	1
11	21130GT	CLEVIS YOKE-1/4-28,PLTD W/PIN	1
12	8179GT	SCREW,HHC,1/4-20 X 2.25	2
13	6638GT	WASHER, FLAT, USS, 1/4"Y	4
14	6091GT	NUT,NYLOCK,1/4-20	2

203.2 Oscillate Valve, S-65

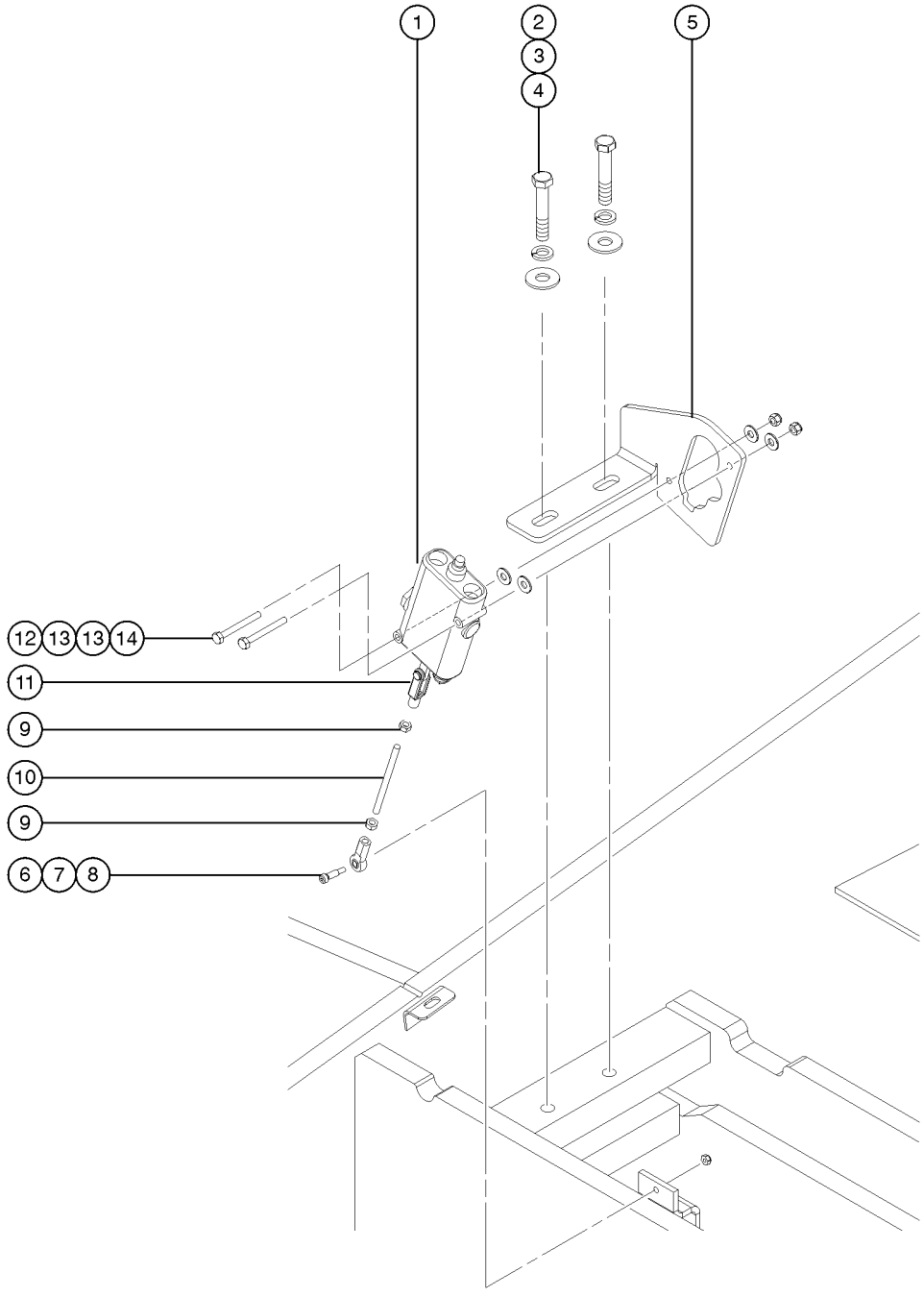

Item	Part No.	Description	Qty.
1	81552GT	VALVE,MANUAL,W/RELIEF VALVE***	1
1-	32681GT	SEAL KIT,CONTROL VALVE	
2	39479GT	SCREW,HHC,1/2-13 X 2.75	2
3	6033GT	WASHER,LOCK,0.5"	2
4	6095GT	WASHER,FLAT,USS,1/2",Y	2
5	139578GT	BRACKET, OSCILLATE VALVE	1
6	6584GT	SCREW,SHS,10-24 X .625	1
7	81691GT	ROD END,BALL JOINT 1/4-28	1
8	5365GT	NUT,NYLOCK,10-24	1
9	21496GT	NUT,HEX,1/4-28	2
10	30785-400GT	THREADED ROD,1/4-28 X 4 IN***	1
11	21130GT	CLEVIS YOKE-1/4-28,PLTD W/PIN	1
12	8179GT	SCREW,HHC,1/4-20 X 2.25	2
13	6638GT	WASHER, FLAT, USS, 1/4"Y	4
14	6091GT	NUT,NYLOCK,1/4-20	2

204.1 TraX Option Steer End, S-60

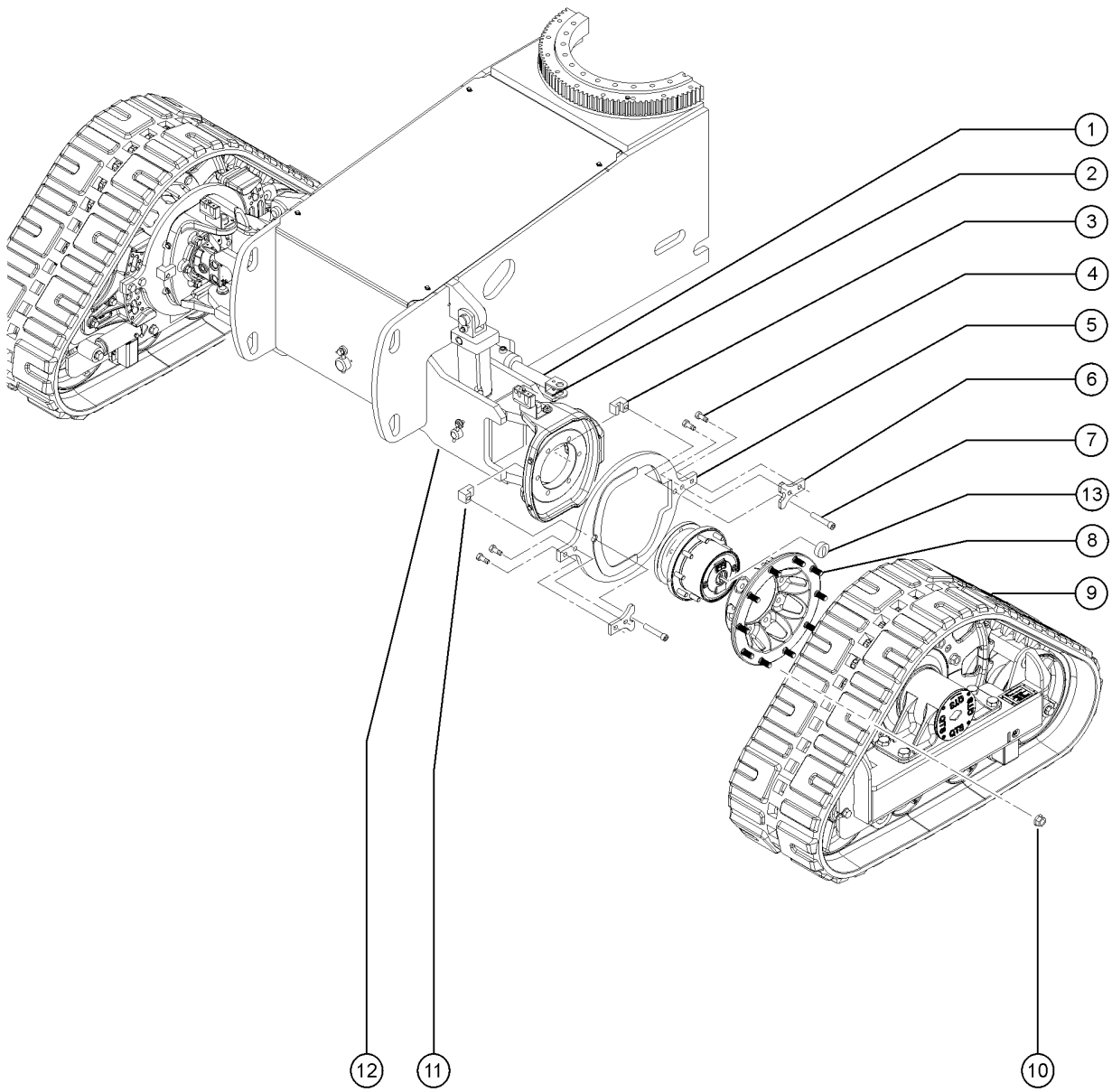

Item	Part No.	Description	Qty.
1	125865GT	CYLINDER, STEER	1
1-	89294GT	SEAL KIT CYLINDER (59460)	
2	125864GT	WELDMENT, TIE ROD	1
3	139122GT	MACH. MOUNTING BLOCK	1
4	94439GT	SCREW,HHC,3/4-10 X 1.5	4
5	139000GT	ROTATIONAL LIMITER FRONT RIGHT	1
5-	139001GT	ROTATIONAL LIMITER FRONT LEFT	1
6	139121GT	PLATE, HAMMER SHIM 1/2	2
7	28117GT	SCREW,SHC,5/8-11 X 1.5	2
8	139002GT	SPACER, 9 BOLT	2
8-	139140GT	STUD, 3/4-16 UNF X 2-1/2 LG for 139002	
9A	139120GT	ASSEMBLY, TRAX UNIT, RIGHT refer to 206.1 for TRAX System service components	1
9B	147149GT	ASSEMBLY, TRAX UNIT, LEFT refer to 206.1 for TRAX System service components	1
10	139135GT	NUT, FLANGE, 3/4-16 UNF GR8	10
11	139125GT	MACH. MOUNTING BLOCK	1
12	139224GT	STEER AXLE ASSEMBLY	1
12-	45071GT	BEARING,1.5IDX1.75ODX1.5L	
13	139179GT	SEAL,TRAX HUBS	1

204.2 TraX Option Steer End, S-65

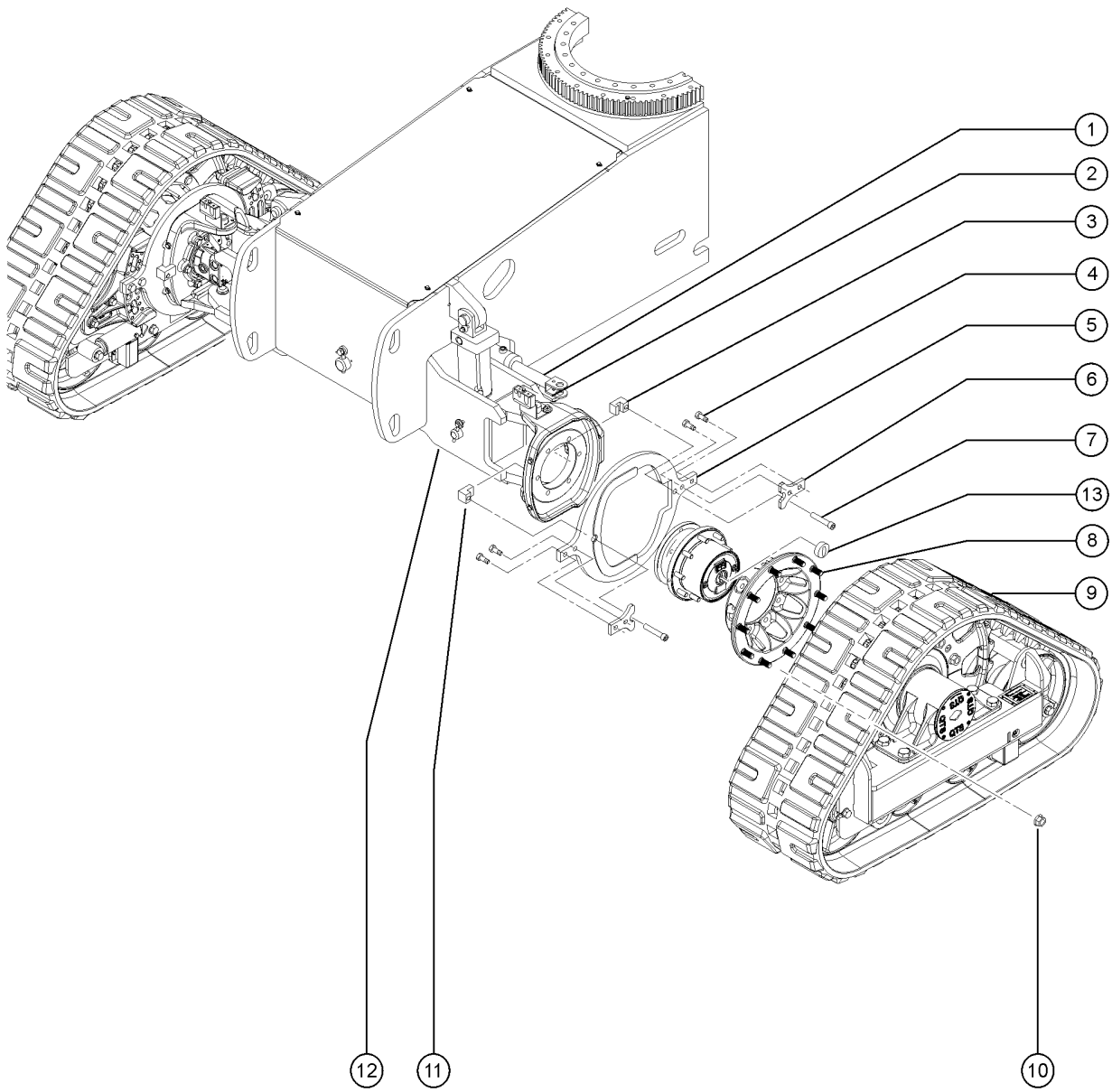

Item	Part No.	Description	Qty.
1	125865GT	CYLINDER, STEER	1
1-	89294GT	SEAL KIT CYLINDER (59460)	
2	125864GT	WELDMENT, TIE ROD	1
3	139122GT	MACH. MOUNTING BLOCK	1
4	94439GT	SCREW,HHC,3/4-10 X 1.5	4
5	139000GT	ROTATIONAL LIMITER FRONT RIGHT includes items 1,2,4,5 and 9	1
5-	139001GT	ROTATIONAL LIMITER FRONT LEFT includes items 1,2,4,5 and 9	1
6	139121GT	PLATE, HAMMER SHIM 1/2	2
7	1260511GT	SCREW,SHC,5/8-11X1.5,A574,ZAG	2
8	139002GT	SPACER, 9 BOLT	2
8-	139140GT	STUD, 3/4-16 UNF X 2-1/2 LG for 139002	
9A	139120GT	ASSEMBLY, TRAX UNIT, RIGHT refer to section 206.1 for TRAX System service components	1
9B	147149GT	ASSEMBLY, TRAX UNIT, LEFT refer to section 206.1 for TRAX System service components	1
10	139135GT	NUT, FLANGE, 3/4-16 UNF GR8	10
11	139125GT	MACH. MOUNTING BLOCK	2
12	139224GT	STEER AXLE ASSEMBLY	2
12-	45071GT	BEARING,1.5IDX1.75ODX1.5L	
13	139179GT	SEAL,TRAX HUBS	2

205.1 TraX Option Non-Steer End, S-60

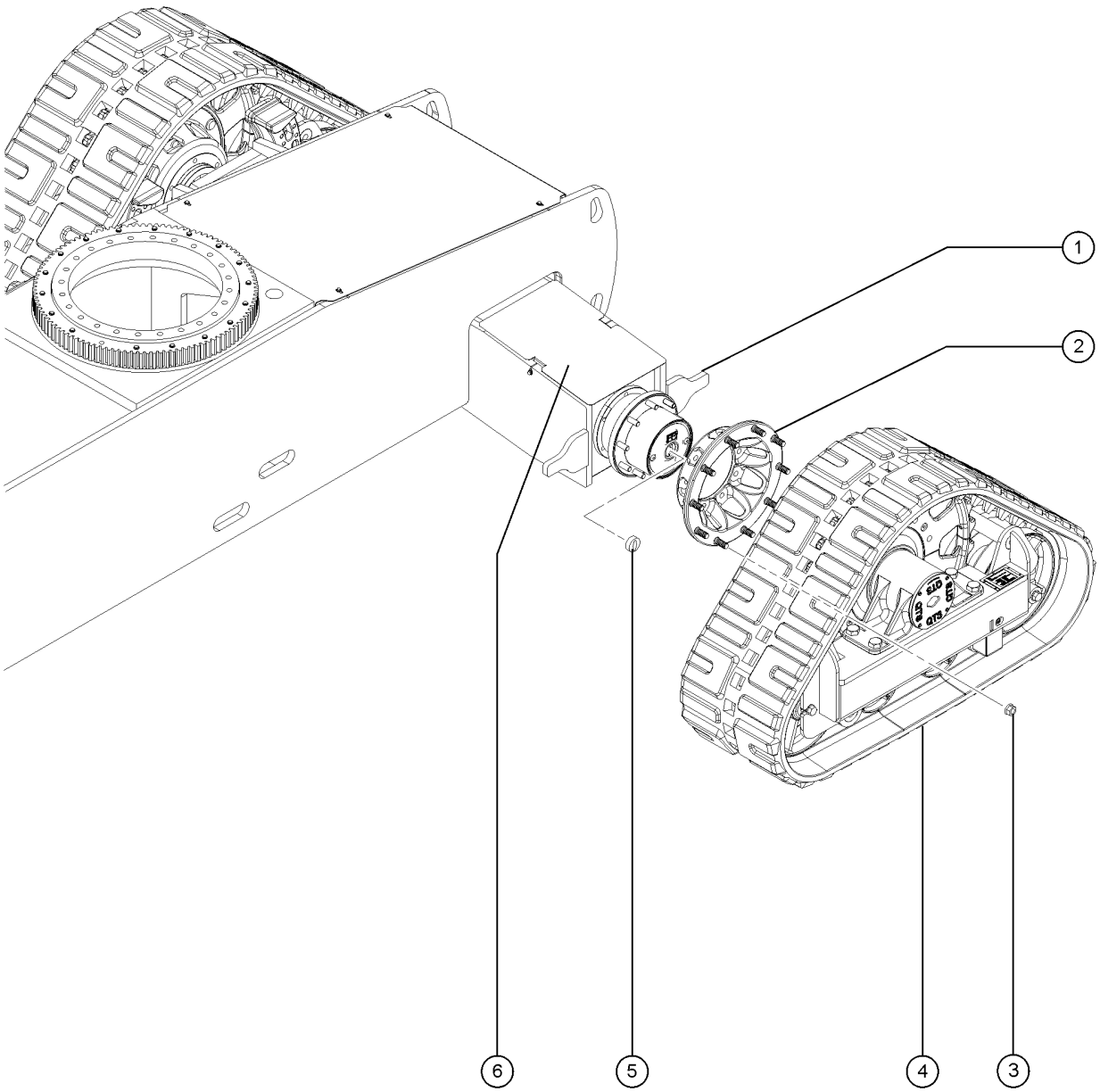

205.1 TraX Option Non-Steer End, S-60

Item	*Part No.*	*Description*	*Qty.*
1	139175GT	NON-STEER AXLE ASSEMBLY	2
1-	42014GT	BEARING,2.00IDX2.25ODX2.00L	
2	139002GT	SPACER, 9 BOLT	2
2-	139140GT	STUD, 3/4-16 UNF X 2-1/2 LG for 139002	
3	139135GT	NUT, FLANGE, 3/4-16 UNF GR8	10
4A		Ref., TRAX UNIT, RIGHT refer to 206.1	1
4B		Ref., TRAX UNIT, LEFT refer to 206.1	1
5	139179GT	SEAL,TRAX HUBS	2
6	125866GT	COVER, REAR AXLE	2

205.2 TraX Option Non-Steer End, S-65

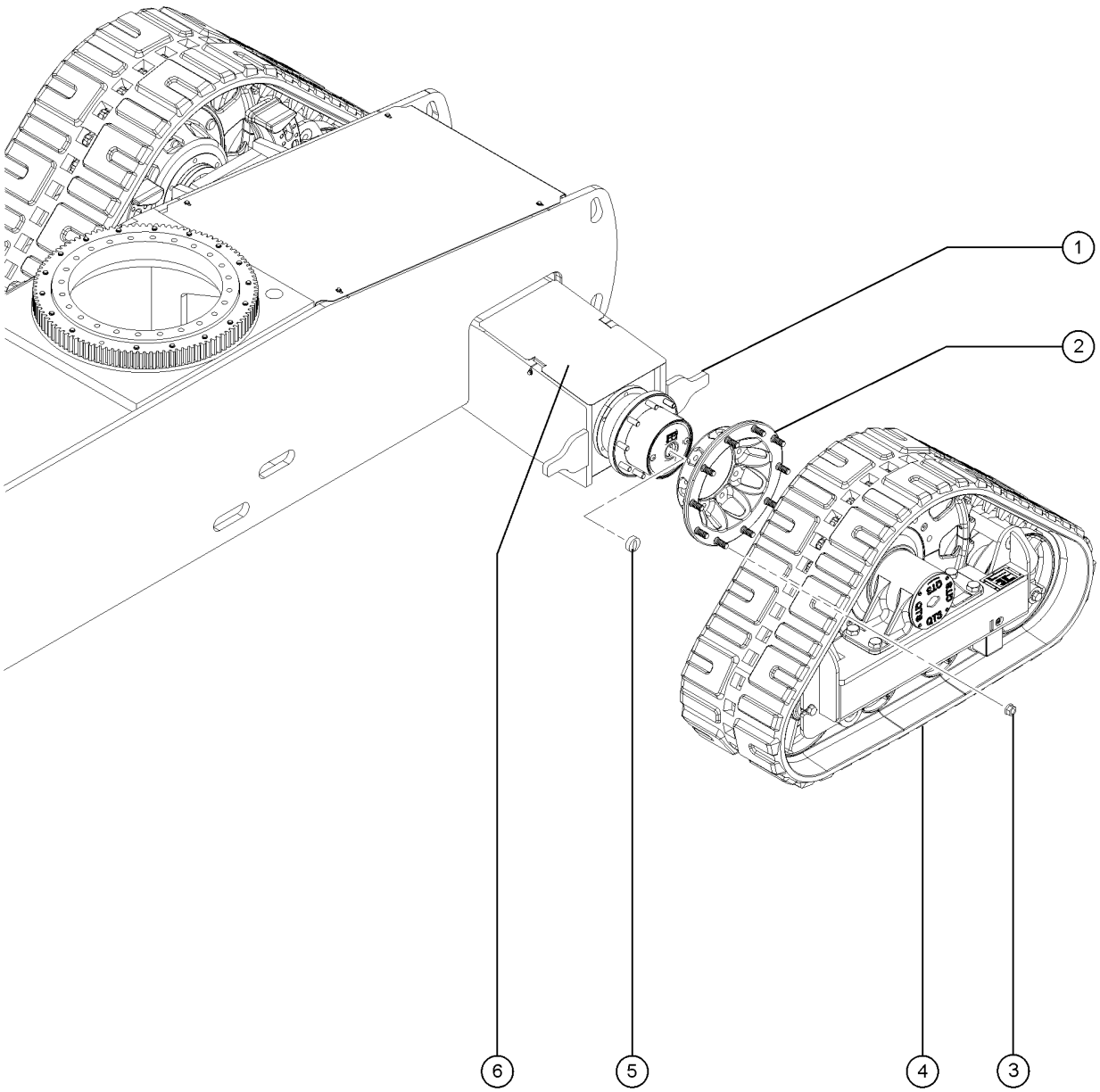

Item	*Part No.*	*Description*	*Qty.*
1	139175GT	NON-STEER AXLE ASSEMBLY	1
1-	42014GT	BEARING,2.00IDX2.25ODX2.00L	
2	139002GT	SPACER, 9 BOLT	2
2-	139140GT	STUD, 3/4-16 UNF X 2-1/2 LG for 139002	
3	139135GT	NUT, FLANGE, 3/4-16 UNF GR8	10
4A		Ref., TRAX UNIT, RIGHT refer to 206.1	1
4B		Ref., TRAX UNIT, LEFT refer to 206.1	1
5	139179GT	SEAL,TRAX HUBS	2
6	125866GT	COVER, REAR AXLE	2

206.1 TraX Option Components

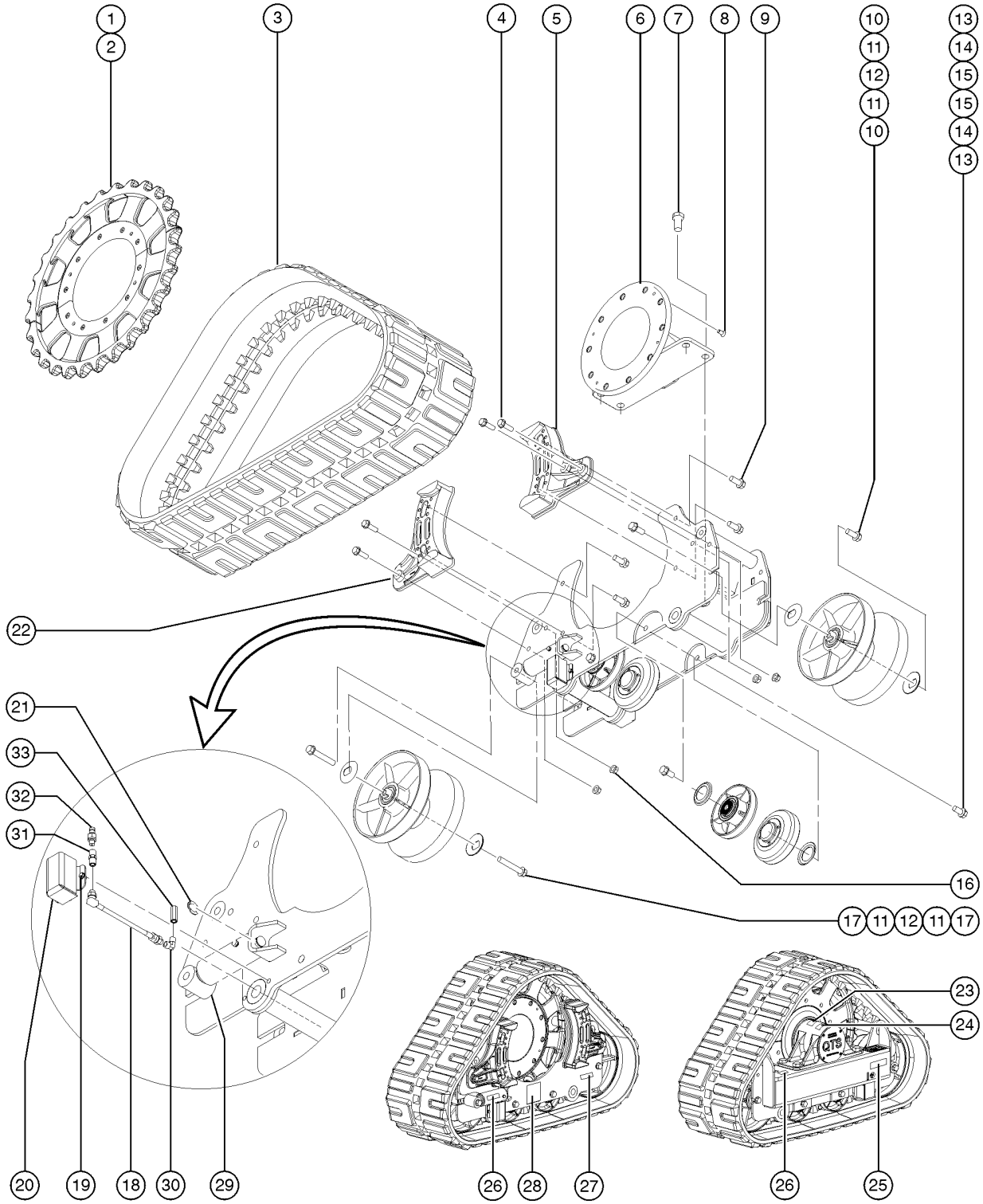

Item	Part No.	Description	Qty.
A	139262GT	KIT,TRAX,9-BOLT, RR HUBS	
A-	139179GT	SEAL,TRAX HUBS	
B	217979GT	KIT,TRAX,9-BOLT, OMNI HUB	
B-	139179GT	SEAL,TRAX HUBS	
C	139000GT	ROTATIONAL LIMITER FRONT RIGHT	
D	139001GT	ROTATIONAL LIMITER FRONT LEFT	
E	147155GT	ROTATIONAL LIMITER REAR	
1	128922GT	SPROCKET, MACH. HALF RIGHT	1
2	128923GT	SPROCKET, MACH. HALF LEFT	1
3	128926GT	TRACK, RUBBER	1
4	111155GT	SCREW,FLANGE,HHC,5/8-11X2,GR8	4
5	128925GT	CAST, LIMITER STOP BRKT R	1
6	128928GT	HUB ASSEMBLY	1
6-	1313693GT	SPINDLE, MAIN	1
6-	1313694GT	BEARING, TAPERED ROLLER	1
6-	1313695GT	HUB, MAIN CAST	1
6-	1313696GT	NUT, SPANNER	1
6-	1313697GT	SEAL, HUB	1
6-	1313698GT	COVER, DUST, AWP	1
6-	1313699GT	O-RING	1
6-	1313700GT	SNAP RING	1
6-	1313701GT	PIN, PLUNGER	1
6-	1313702GT	SPRING, COMPRESSION, .53ID X 1.94 LONG	1
6-	1313703GT	PIN, SPRING 3/16 DIA X .625 LONG	2
6-	1313704GT	O-RING .484 ID X .139 CROSS SECTION	2
6-	1313705GT	COVER, BRAKE RELEASE	1
6-	1313706GT	O-RING, 1.00 DIA X .094 CROSS SECTION	1
6-	1313707GT	SPACER, RUBBER	1

206.1 TraX Option Components

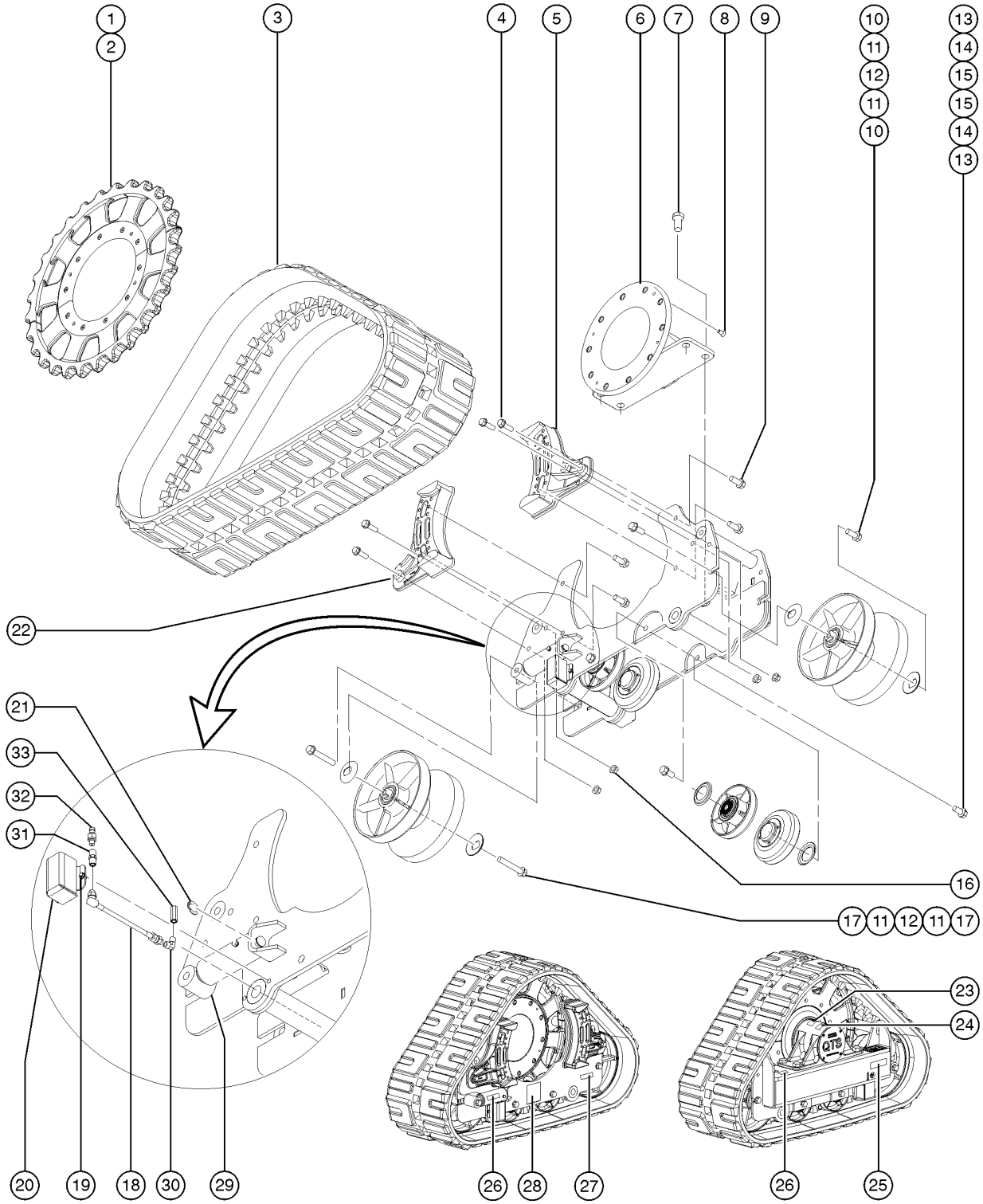

Item	Part No.	Description	Qty.
6-	1313708GT	SCREW, HFS, 1/4-20 X .38, GR8, YZ	2
6-	1313709GT	SCREW, SHCS, 5/16-18 X .75, GR8, YZ	4
6-	1287812GT	SEAL,RUBBER BRAKE RELEASE,RUBBER TRACK (139120)	
6-	1287813GT	O-RING,RUBBER TRACK (139120)	
7	128913GT	BOLT,HHC,1-14X2.0"GR8 PLT	4
8	128914GT	SCREW, FHSC, 1/2-13X1.00	4
9	128912GT	BOLT,FLANGE,5/8-11X1.5"GR8 PLT	4
10	128910GT	BOLT,FLANGE,3/4-10X1.75GR8 PLT	2
11	128920GT	COVER, DUST	4
12	128917GT	END BOGEY	2
13	128909GT	BOLT,FLANGE,3/4-10X1.5"GR8 PLT	4
14	128921GT	GUARD, SEAL	4
15	128918GT	SPLIT BOGEY	4
15-	215424GT	BEARING, SPL BOGEY (128918) for 128918	
15-	215425GT	SEAL, BEARING (128918) for 215424	
15-	215426GT	SHAFT, RAISED BOSS (128918) internal shaft with raised boss on end	
15-	215427GT	SHAFT, KNURLED (128918) internal shaft with knurled end	
16	128916GT	NUT,FLANGE,LOCK,5/8-11GR8 PLT	4
17	128911GT	BOLT,FLANGE,3/4-10X4.5"GR8 PLT	2
18	128927GT	HYD. HOSE ASSEMBLY 3000 PSI	1
19	128955GT	BOLT,FLANGE,5/16-18X.50 GR5	4
20	1261393GT	ASSEMBLY, OUTSIDE HOSE GUARD shown for reference only	
20B	1261394GT	ASSEMBLY, INSIDE HOSE GUARD	
21	128919GT	SNAP RING	2
22	128924GT	CAST, LIMITER STOP BRKT L	1
23	226940GT	DECAL,LABEL,TORQUE	1
24	226944GT	DECAL,WARN,AVOID INJURY	1
25	226946GT	DECAL,WARN,HIGH PRESS	1

206.1 TraX Option Components

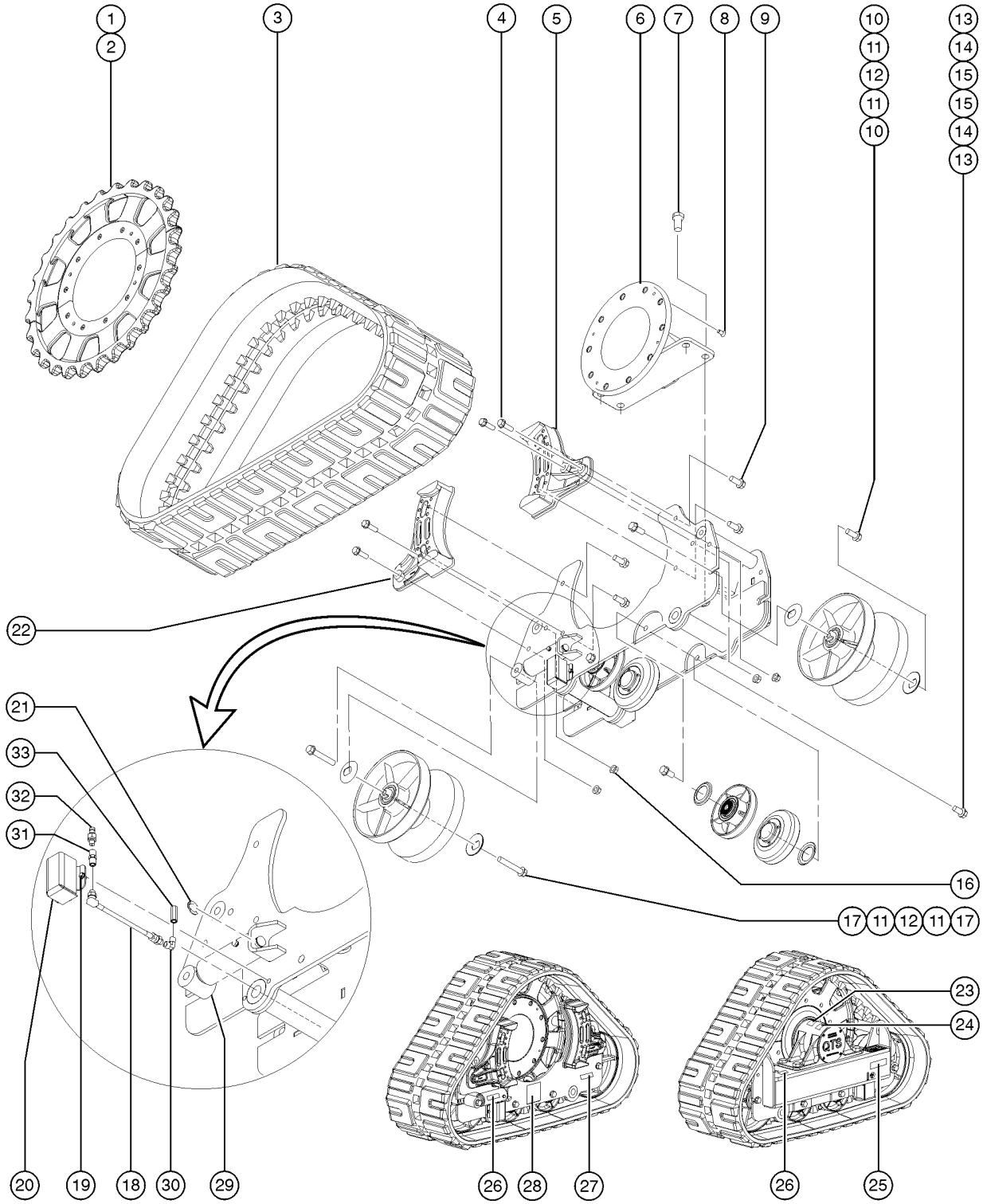

Item	Part No.	Description	Qty.
26	226943GT	DECAL,CAUTION,READ INST	1
27	226945GT	DECAL,WARN,CRUSH HAZ	1
28	226941GT	DECAL,LABEL,ASSY INSTALL,R	1
28B	226942GT	DECAL,LABEL,ASSY INSTALL,L SUPPLIER P/N 401905	
29	215423GT	TENSIONER, TRAX	
29-	1330530GT	FITTING, GREASE, ZERT, 1/4" X 18 PTF, SAE SPC	
30	1261392GT	ELBOW,90,1/4-18NPT,FEMALE	
31	1261390GT	COUPLING - 1/4 NPT	
32	1261389GT	NIPPLE,STEEL PIPE,1/4NPTX1 LG	
33	1261391GT	NIPPLE,STEEL PIPE,1/4NPTX2.5LG	

301.1 Tank Side - View 1, S-60

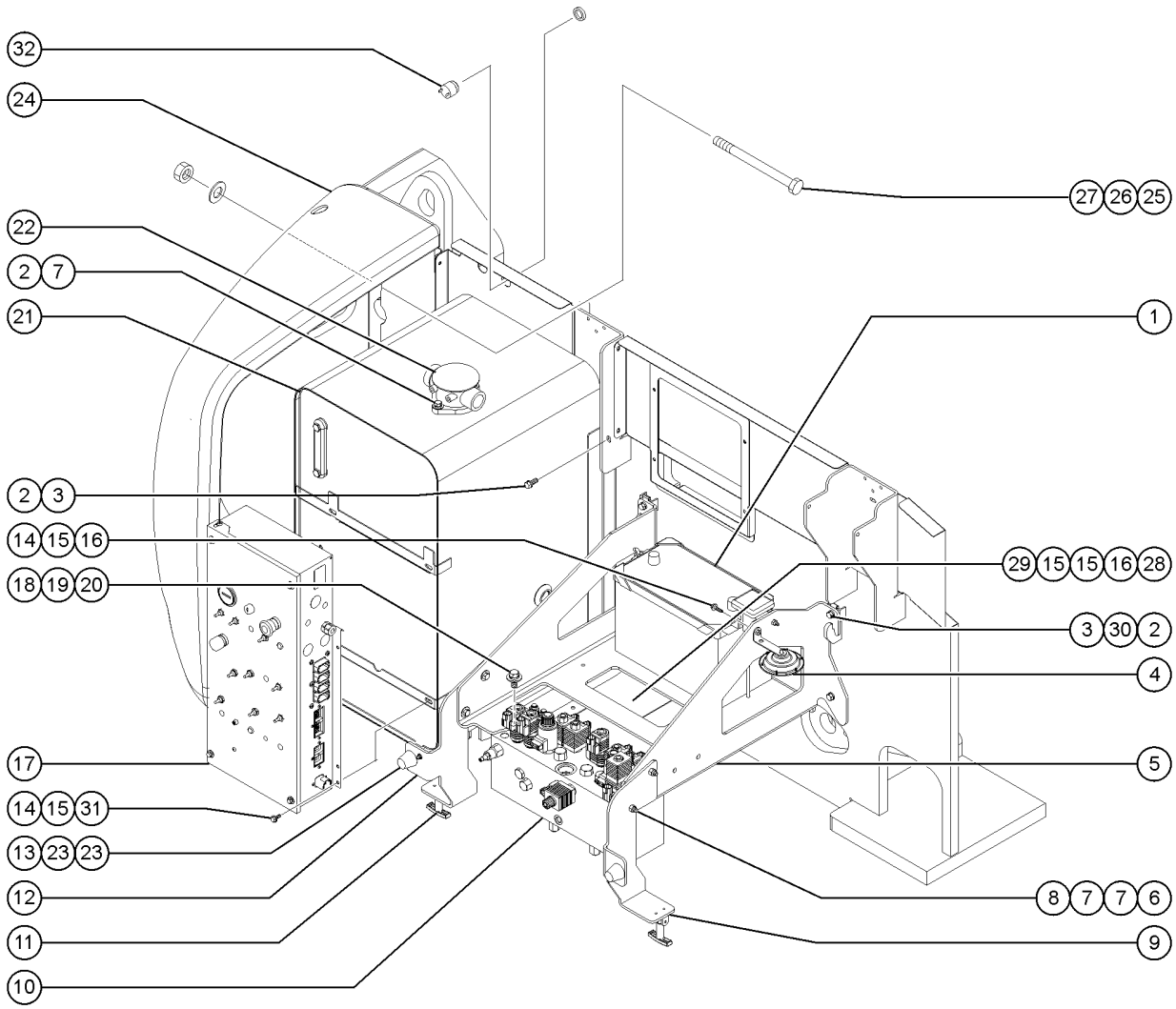

301.1 Tank Side - View 1, S-60

Item	Part No.	Description	Qty.
1	1303581GT	BATTERY, 12V, 950CCA, FLA	1
1-	30144GT	BATTERY HOLD DOWN,GROUP 31	
1-	45708GT	HOOK,BATT HOLD DOWN,10"	
1-	8170GT	NUT,WING,1/4-20	
1A	237068GT	SEPARATOR,DUAL BATTERY,100A for dual-battery option	1
2	6175GT	SCREW,HHC,3/8-16 X 1	
3	29868GT	SPRING CLIP,3/8-16,.05-.20X.73,ZAG	
4	81578GT	HORN,12VDC,SPADE TERMINALS***	1
5	T108403GT	WELDMENT,BAT/MANIF TRAY,S60/65	1
6	4828GT	NUT, NYLOCK, 3/8-16	
7	6097GT	WASHER, FLAT, USS, 3/8", Y	
8	6019GT	SCREW,HHC,3/8-16 X 1.25 GRD 5	
9	77646PGT	FORMING,COVER STOP,PAINTED	1
10		Ref. Function Manifold (refer to 401.1)	
11	45363GT	LATCH,FLEXIBLE	4
11-	54322GT	SCREW,10-32 X.625,SF.TAP.PHIL	
11-	6146GT	WASHER,FLAT,MS,#10,Y	
11-	6178GT	NUT, NYLOCK, 10-32	
12	77645PGT	FORMING,COVER STOP,PAINTED	1
13	30973GT	BUMPER,RUBBER-1 X 1.25	2
14	6090GT	SCREW, HHC, 1/4-20 X .75	
15	6638GT	WASHER, FLAT, USS, 1/4"Y	
16	6091GT	NUT,NYLOCK,1/4-20	
17		Ref. Ground Controls (refer to 305.1 or 306.1)	
18	10597GT	SCREW,HHC,1/2-13 X 1.25 GR5	
19	6033GT	WASHER,LOCK,0.5"	
20	6095GT	WASHER,FLAT,USS,1/2",Y	
21	T108331GT	HYDRAULIC TANK ASSEMBLY includes item 22 with fasteners	1

301.1 Tank Side - View 1, S-60

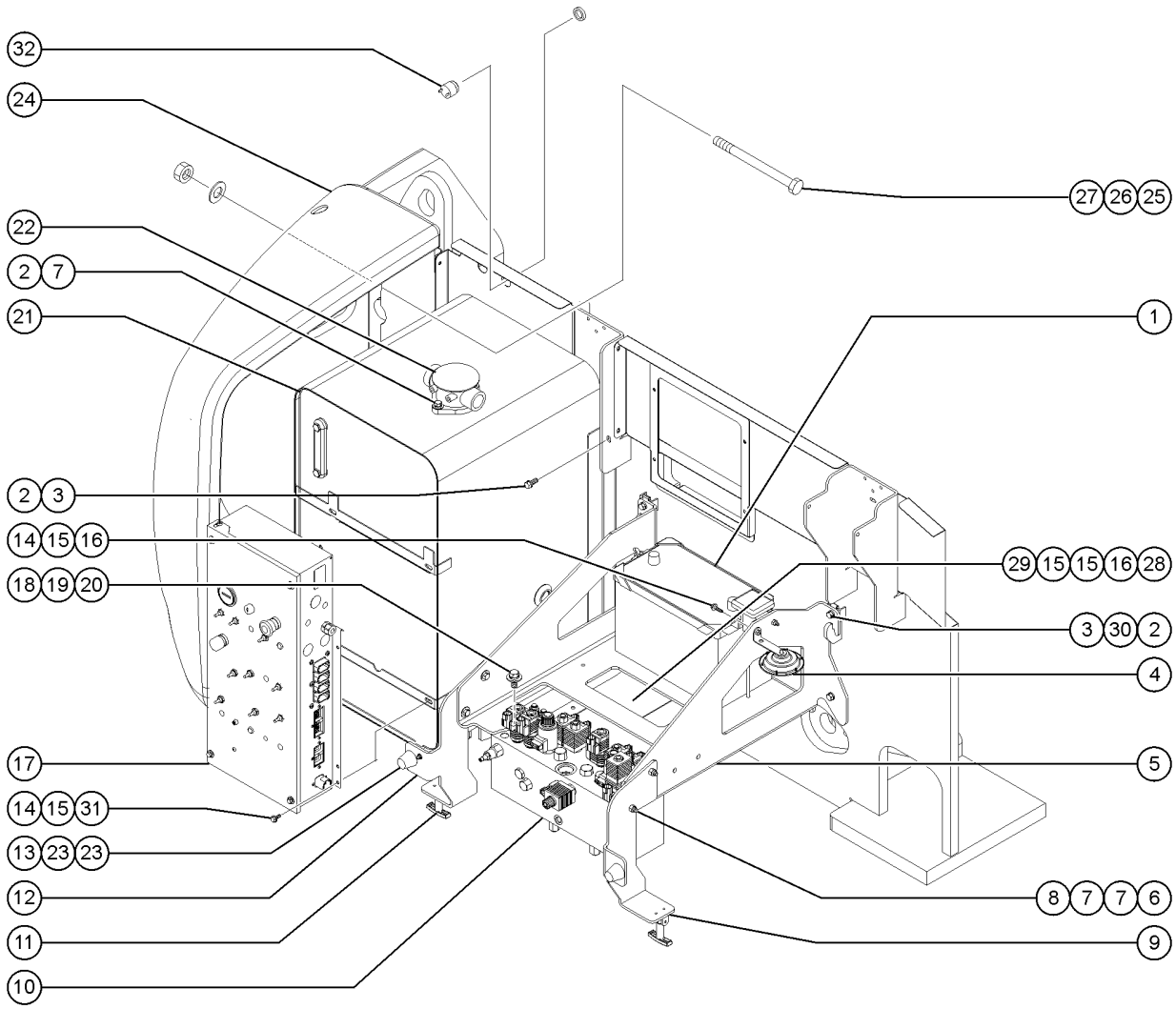

301.1 Tank Side - View 1, S-60

Item	Part No.	Description	Qty.
21-	21141GT	GAUGE-SIGHT,LHA-LGTB***	
21-	1285235GT	PLUG,HYD.TANK,SAE-8 (147831)	
22A	110345GT	FILTER ASSY,INTANK includes item 22B	1
22A-	147223GT	SEAL,FILTER LID	
22B	77353GT	KIT,ELEMENT**	
22B-	94526GT	GASKET,RETURN FILTER-77353	
22B-	77354GT	FILTER LID,RFM165	
22B-	77365GT	BREATHER CAP,RFM165	
22B-	88917GT	FILTER,ELEMENT,BETA(10)=200	
23	18503GT	NUT, LOCKING - LG FLANGE 5/16 - 18	4
24A	88888GT	COUNTERWEIGHT,S60 4350LBS S-60X, S-60, and S-60TraX	1
24B	88889GT	COUNTERWEIGHT,S60/65 5500LBS** S-60X, S-60 and-S60 TraX with 750 lb capacity; S-60XC, S-60HC, S-65 & S-65TraX	1
25	73928GT	SCREW,HHC,1-8 X 11,GRD 5***	1
26	38859GT	WASHER,FLAT,USS,1",Y	
27	29764GT	NUT,NYLOCK,1-8	
28	T107829GT	FORMING,HARNESS SUPPORT,S60/65	1
29	6888GT	SCREW, HHC, 1/4-20 X 1	
30	5397GT	WASHER, FLAT, USS, 5/16-18	
31	56912GT	SPRING CLIP,1/4-20,.025-.15X.54,ZAG	
32	230392GT	ALARM,DESCENT 72326 nut not included, order separately	1
32	72326GT	NUT - PLASTIC, RING FOR ALARMS	1

301.2 Tank Side - View 1, S-65

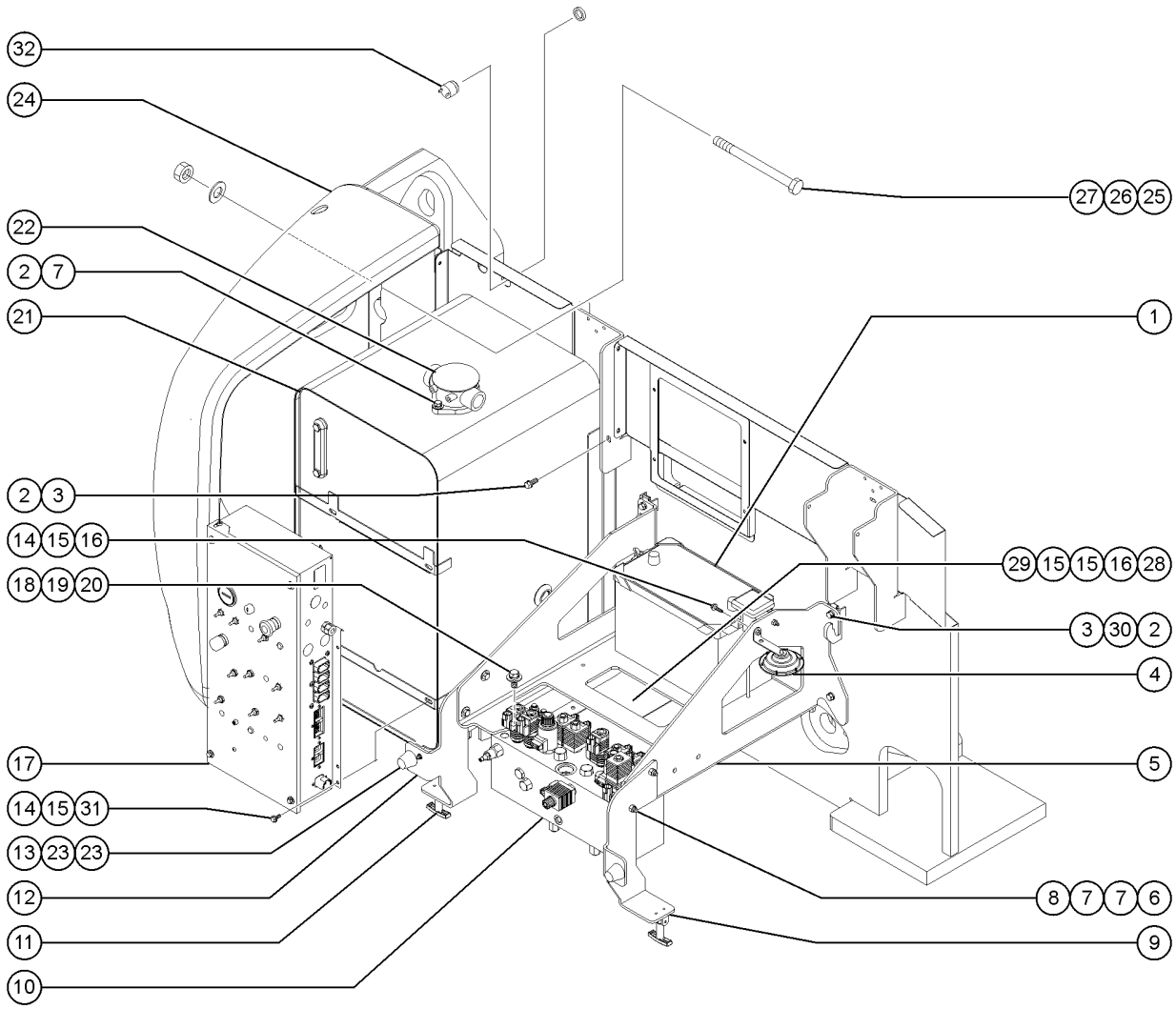

301.2 Tank Side - View 1, S-65

Item	Part No.	Description	Qty.
1A	1303581GT	BATTERY, 12V, 950CCA, FLA	1
1A-	30144GT	BATTERY HOLD DOWN,GROUP 31	
1A-	45708GT	HOOK,BATT HOLD DOWN,10"	
1B	1303585GT	BATTERY, 12V, 950CCA, FLA for dual-battery option	1
1C	237068GT	SEPARATOR,DUAL BATTERY,100A for dual-battery option	1
2	6175GT	SCREW,HHC,3/8-16 X 1	
3	29868GT	SPRING CLIP,3/8-16,.05-.20X.73,ZAG	
4	81578GT	HORN,12VDC,SPADE TERMINALS***	1
5	T108403GT	WELDMENT,BAT/MANIF TRAY,S60/65	1
6	4828GT	NUT, NYLOCK, 3/8-16	
7	6097GT	WASHER, FLAT, USS, 3/8", Y	
8	6019GT	SCREW,HHC,3/8-16 X 1.25 GRD 5	
9	77646PGT	FORMING,COVER STOP,PAINTED	1
10		Ref. Function Manifold (refer to 401.1)	
11	45363GT	LATCH,FLEXIBLE	4
11-	54322GT	SCREW,10-32 X.625,SF.TAP.PHIL	
11-	6146GT	WASHER,FLAT,MS,#10,Y	
11-	6178GT	NUT, NYLOCK, 10-32	
12	77645PGT	FORMING,COVER STOP,PAINTED	1
13	30973GT	BUMPER,RUBBER-1 X 1.25	2
14	6090GT	SCREW, HHC, 1/4-20 X .75	
15	6638GT	WASHER, FLAT, USS, 1/4"Y	
16	6091GT	NUT,NYLOCK,1/4-20	
17		Ref. Ground Controls (refer to 305.1 or 306.1)	
18	10597GT	SCREW,HHC,1/2-13 X 1.25 GR5	
19	6033GT	WASHER,LOCK,0.5"	
20	6095GT	WASHER,FLAT,USS,1/2",Y	
21	T108331GT	HYDRAULIC TANK ASSEMBLY includes item 22 with fasteners	1

301.2 Tank Side - View 1, S-65

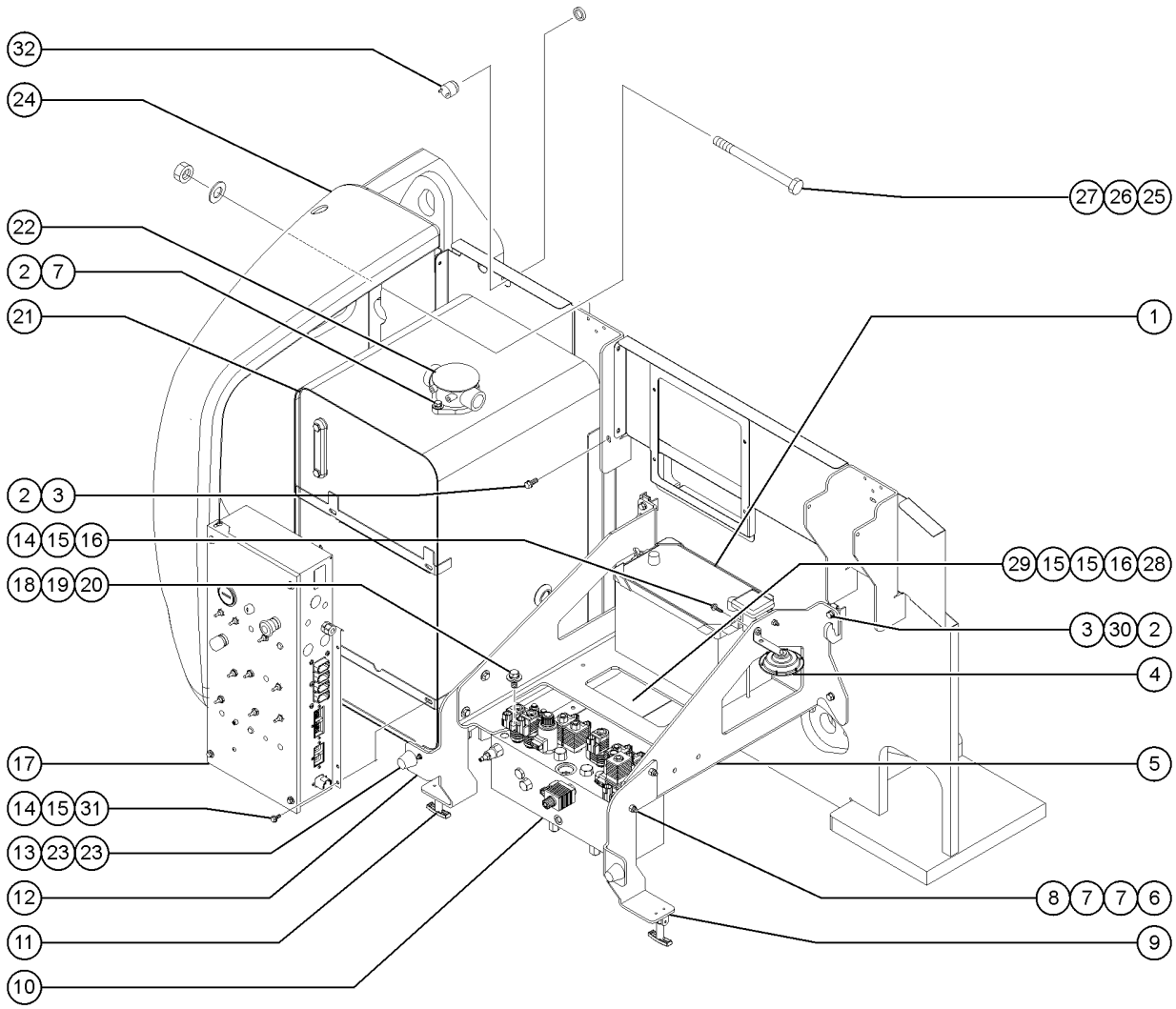

301.2 Tank Side - View 1, S-65

Item	Part No.	Description	Qty.
21-	21141GT	GAUGE-SIGHT,LHA-LGTB***	
21-	1285235GT	PLUG,HYD.TANK,SAE-8 (147831)	
22A	110345GT	FILTER ASSY,INTANK includes item 22B	1
22A-	147223GT	SEAL,FILTER LID	
22B	77353GT	KIT,ELEMENT**	
22B-	94526GT	GASKET,RETURN FILTER-77353	
22B-	77354GT	FILTER LID,RFM165	
22B-	77365GT	BREATHER CAP,RFM165	
22B-	88917GT	FILTER,ELEMENT,BETA(10)=200	
23	18503GT	NUT, LOCKING - LG FLANGE 5/16 - 18	4
24A	88888GT	COUNTERWEIGHT,S60 4350LBS S-60X, S-60XC, S-60, and S-60 TraX	1
24B	88889GT	COUNTERWEIGHT,S60/65 5500LBS** S-60 and-S60TraX with 750 lb capacity; S-60XC, S-60HC, S-65 & S-65TraX	1
25	73928GT	SCREW,HHC,1-8 X 11,GRD 5***	1
26	38859GT	WASHER,FLAT,USS,1",Y	
27	29764GT	NUT,NYLOCK,1-8	
28	T107829GT	FORMING,HARNESS SUPPORT,S60/65	1
29	6888GT	SCREW, HHC, 1/4-20 X 1	
30	5397GT	WASHER, FLAT, USS, 5/16-18	
31	56912GT	SPRING CLIP,1/4-20,.025-.15X.54,ZAG	
32	230392GT	ALARM,DESCENT 72326 nut not included, order separately	1
32	72326GT	NUT - PLASTIC, RING FOR ALARMS	1

302.1 Tank Side - View 2

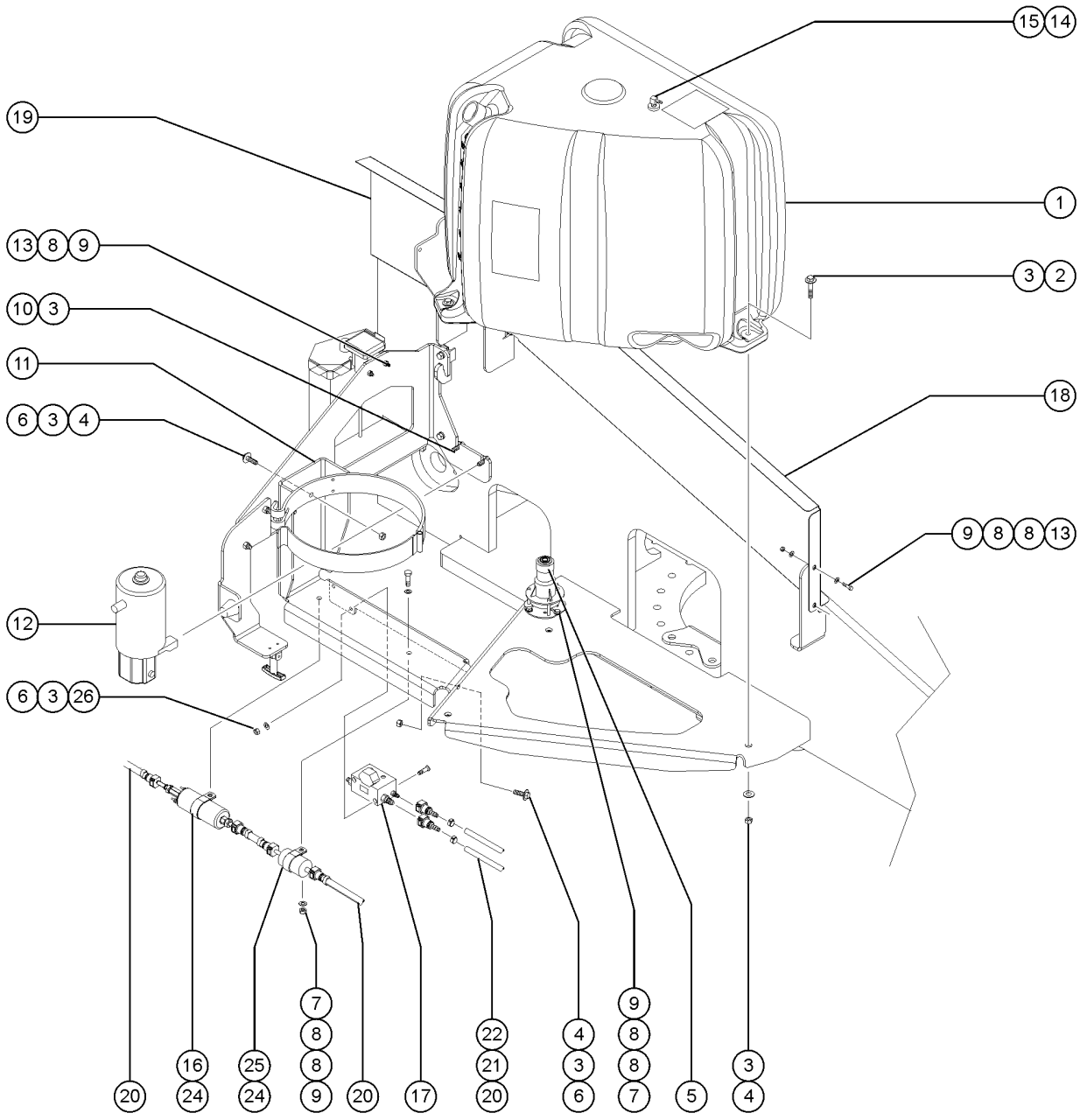

302.1 Tank Side - View 2

Item	Part No.	Description	Qty.
1A	88684GT	TANK,FUEL 35 GAL PLASTIC,S60 Diesel models	1
1A	101726GT	CAP,FUEL,DIESEL,1/8"VENT(GRN) Diesel models, no longer available, (replaced by 1316635)	1
1A	1316635GT	CAP, FUEL, DIESEL, 0.08 IN HOLE (BLACK)	1
1A	22348GT	ELBOW,130339-6-6 for 88684 (bottom of tank)	
1A	54124GT	HOSE END,BARB,3/8 MNPT X 5/16 for 88684 (bottom of tank)	
1B	T109267GT	TANK ASSY, GAS, 30 GAL., SERV Gasoline/LPG models (steel, from SN 21159))	1
1B	146417GT	ASSY, FUEL PICKUP TUBE Gasoline/LPG models	
1B	146552GT	PLATE, COVER, FUEL LEVEL SNDR Gasoline/LPG models	
1B	146551GT	GASKET, FUEL LEVEL SENDER, Z80 Gasoline/LPG models	
1B	146413GT	GAUGE, FUEL LEVEL, 20/30 GAL Gasoline/LPG models	
1B	128081GT	ELBOW,90D,1/4FPTX3/8MPT for T109267 (bottom of tank)	
1B	111818GT	FITTING,1/4 NPT X SAE J2044 for T109267 (bottom of tank)	
1B	119918GT	CAP,FUEL,GASOLINE 3.5PSI Gasoline/LPG models	
1C		TANK ASSY,GAS,30 GAL,PLASTIC Gasoline/LPG models (to SN 21158), (no longer available)	
1D	27089GT	HOSE,5/16 FUEL,SAE 30R7 Deutz models	114 inches
1E	27089GT	HOSE,5/16 FUEL,SAE 30R7 Perkins models (tank to handpump)	64 inches
1E	27089GT	HOSE,5/16 FUEL,SAE 30R7 Perkins models (handpump to filter/separator)	18 inches
1E	27089GT	HOSE,5/16 FUEL,SAE 30R7 Perkins models (filter/separator to lift pump)	12 inches
2	5224GT	SCREW,HHC,3/8-16 X 2	
3	6097GT	WASHER, FLAT, USS, 3/8", Y	
4	4828GT	NUT, NYLOCK, 3/8-16	
5A	94077GT	SENSOR,LEVEL,4.5 DEG S-65, S-60XC, S-60X, S-60, S-60 TraX and S-65 TraX; ANSI models. PN 1261449 may be required, see below	1
5B	110382GT	LEVEL SENSOR,LS60,YL,2.5X4.5 S-65,S-60 HC, S-60, S-60 TraX and S-65 TraX; European models	
5C	1264947GT	KIT, LEVEL SENSOR, 6 PIN CONN For ANSI/CSA models with 6-pin wire harness connector, includes instructions	
6	6019GT	SCREW,HHC,3/8-16 X 1.25 GRD 5	

302.1 Tank Side - View 2

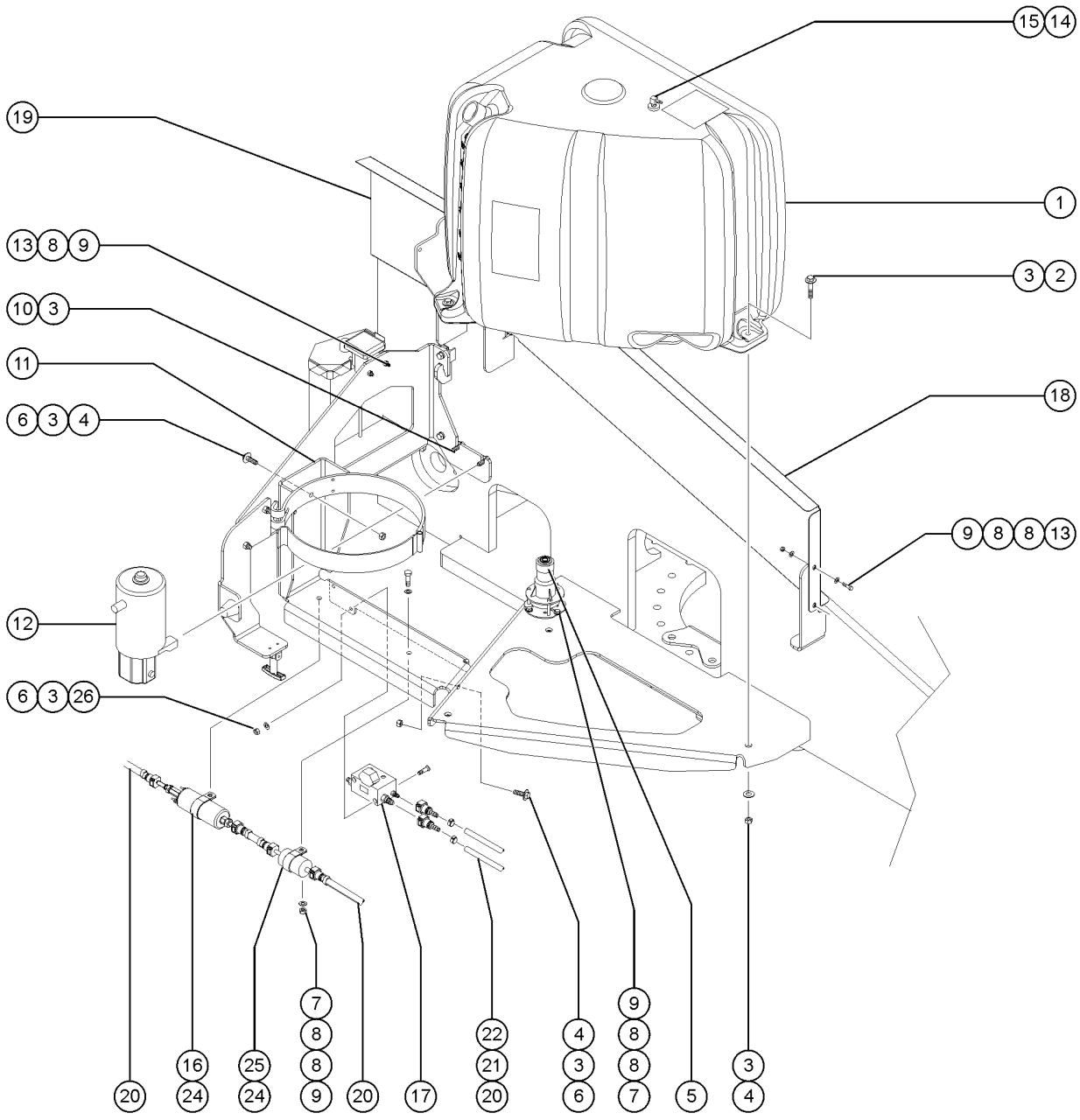

302.1 Tank Side - View 2

Item	Part No.	Description	Qty.
7	8915GT	SCREW, HHC, 1/4-20 X 1.25	
8	6638GT	WASHER, FLAT, USS, 1/4"Y	
9	6091GT	NUT,NYLOCK,1/4-20	
10	6175GT	SCREW,HHC,3/8-16 X 1	
11	77679GT	WELDMENT,LP MOUNT	1
12	89617GT	POWER UNIT,AUX PUMP 12VDC	1
12-	77069GT	MOTOR,12VDC,77066	
12-	58489GT	PUMP ASSY,AUX.POWER UNIT 89617	
12-	77071GT	SOLENOID,77066	
12-	147289GT	SEAL KIT, APU	
12-	147290GT	SHAFT SEAL, APU	
13	6888GT	SCREW, HHC, 1/4-20 X 1	
14		FUEL RETURN,DAPCO 3/8" Gasoline/LPG models, (no longer available)	
14	61234GT	FUEL RETURN,DAPCO 18.75 Diesel models,(use until exhausted)	
14A	30490GT	HOSE,1/4 FUEL LINE,SAE 30R7 fuel return (diesel models)	126 inches
15	61240GT	BUSHING,FUEL TANK FITTING (SM)	1
16	77219GT	PUMP, FUEL, LRG425, WALBRO Gasoline/LPG models	1
17	119170GT	FUEL SENSOR ASSY.	1
18	77681GT	FORMING,BULKHEAD,LEFT REAR	1
19	77680GT	FORMING,BULKHEAD,LEFT FRONT	1
20A	229201GT	HOSE,FUEL,5/16HIGH PRES 127 IN Gasoline/LPG models	
20B	229202GT	HOSE,FUEL,5/16 HIGH PRES 35 IN Gasoline/LPG models	
20C	229203GT	HOSE,FUEL,5/16 HIGH PRES 3 IN Gasoline/LPG models	
20D	229204GT	HOSE,FUEL,5/16HIGH PRS 43.5 IN Gasoline/LPG models to SN 23408	
20E	236911GT	HOSE,FUEL,5/16HIGH PRS 40 IN Gasoline/LPG models from SN 23409	
20F	229205GT	HOSE,FUEL,5/16HIGH PRS 53.5 IN Gasoline/LPG models to SN 23408	
20G	236912GT	HOSE,FUEL,5/16HIGH PRS 60 IN Gasoline/LPG models from SN 23409	

302.1 Tank Side - View 2

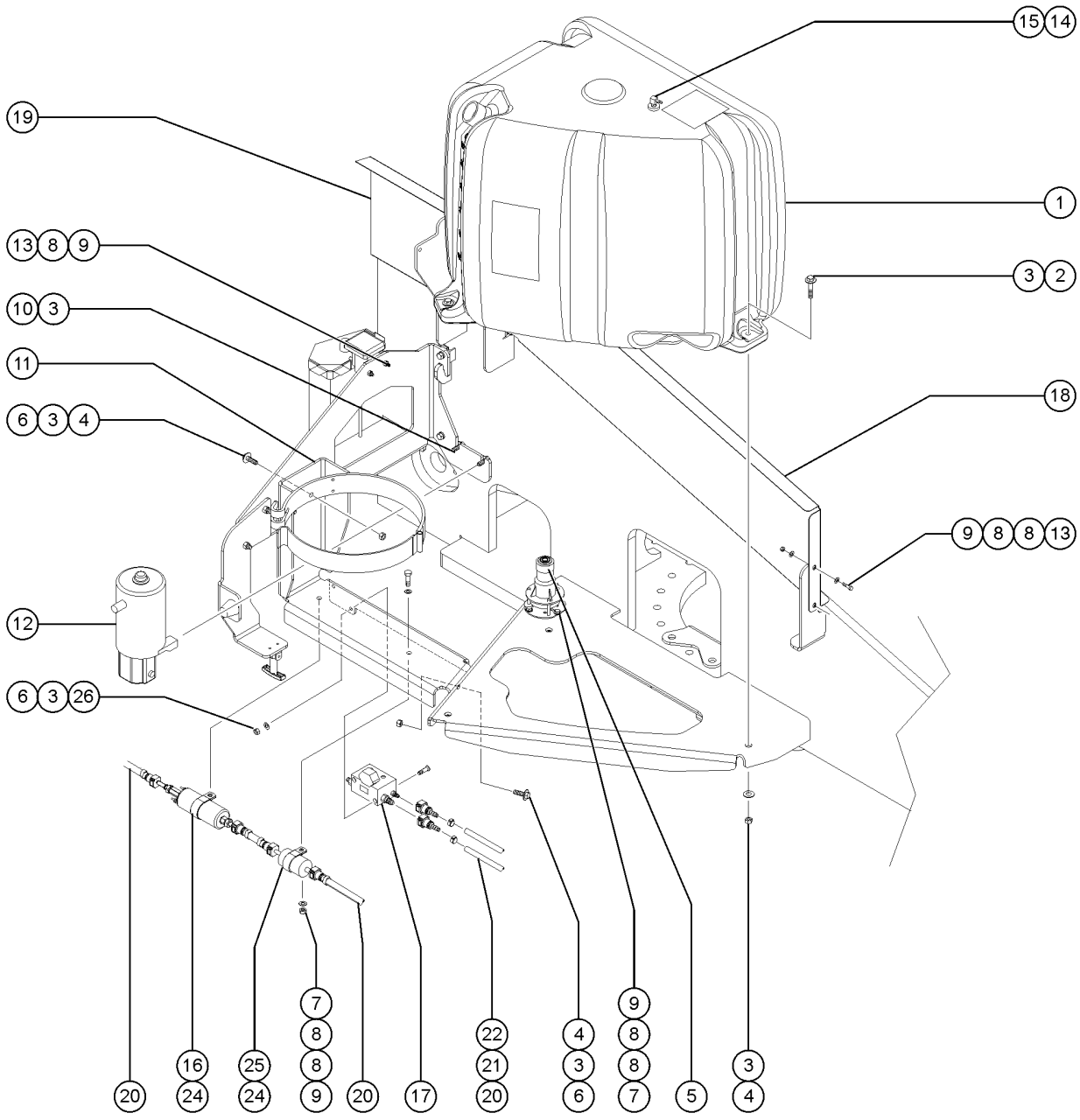

302.1 Tank Side - View 2

Item	Part No.	Description	Qty.
21	65887GT	CLAMP,HOSE,1 EAR,1/2	
22	111819GT	FITTING,SAE J2044F X5/16 BARB	
23	6090GT	SCREW, HHC, 1/4-20 X .75	
24	27497GT	CLAMP,RUBBER CUSHIONED-2 5/32	
25	1272019GT	FILTER, FUEL	1
26	4266GT	SCREW,HHC,1/4-20 X 2	

303.1 Turntable Covers, S-60

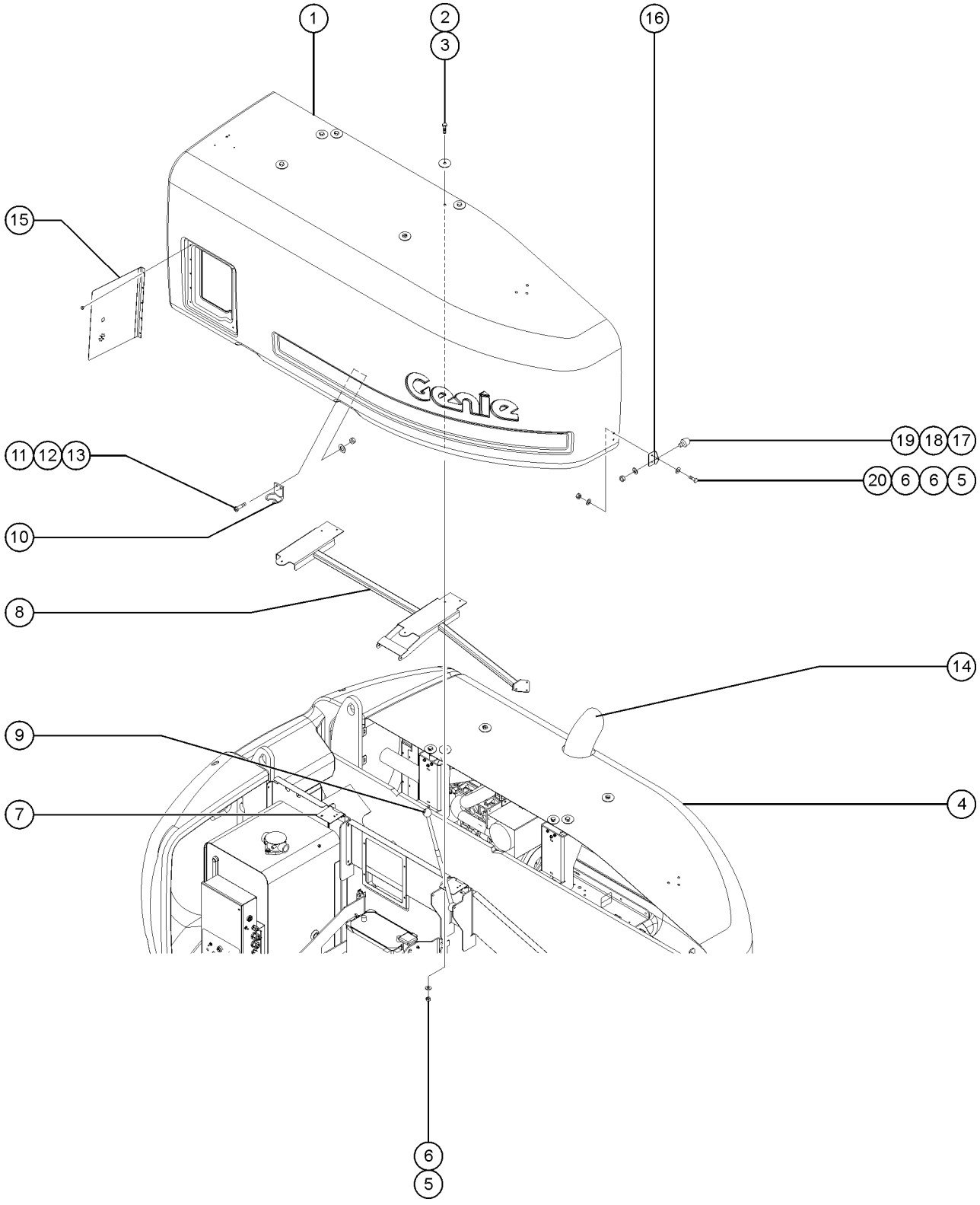

Item	Part No.	Description	Qty.
1	T108332GT	COVER ASSY.W/WORD DECALS LH S-60X, Diesel models (N. America)	1
1-	T108333GT	COVER ASSY.W/SYMBOL DECALS LH S-60X, Diesel models (S. America/Asia)	
1-	T108334GT	COVER ASSY.W/WORD DECALS LH S-60X, Gasoline/LPG (N. America)	
1-	T108335GT	COVER ASSY W/ SYMBOL DECALS LH S-60X, Gasoline/LPG models (S. America/Asia)	
1-	T108336GT	COVER ASSY.W/WORD DECALS LH S-60XC, Diesel models (N. America)	
1-	T108337GT	COVER ASSY W/ SYMBOL DECALS LH S-60XC, Diesel models (S. America/Asia)	
1-	T108338GT	COVER ASSY.W/WORD DECALS LH S-60XC, Gasoline/LPG (N. America)	
1-	T108339GT	COVER ASSY W/ SYMBOL DECALS LH S-60XC, Gasoline/LPG models (S. America/Asia)	
1-	T108340GT	COVER ASSY.W/WORD DECALS LH S-60 TraX, Diesel models (N. America)	
1-	T108341GT	COVER ASSY W/ SYMBOL DECALS LH S-60 TraX, Diesel models (S. America/Asia)	
1-	T108342GT	COVER ASSY.W/WORD DECALS LH S-65 (N. America), S-60 & S-65 (Australia), Gasoline/LPG	
1-	T108343GT	COVER ASSY W/ SYMBOL DECALS LH S-65 (S. America/Asia), S-60 HC (Europe) & S-60/65 (Europe) , Gasoline/LPG	
1-	T108344GT	COVER ASSY.W/WORD DECALS LH S-65 (N. America), S-60 (AUS), S-60 & S-65 TraX (Australia), Diesel models	
1-	T108345GT	COVER ASSY W/ SYMBOL DECALS LH S-65 (S. America/Asia), S-65 TraX (S.America/Asia) S-60 HC (Europe), S-60 & S-65 TraX (Europe), Diesel models	
2	6888GT	SCREW, HHC, 1/4-20 X 1	
3	12906GT	WASHER,FENDER,.25 X 1.25 X.062	
4	139902GT	COVER ASSY W/ WORD DECALS RH	1
4-	139900GT	COVER ASSY W/ SYMBOL DECALS RH	
5	6091GT	NUT,NYLOCK,1/4-20	
6	6638GT	WASHER, FLAT, USS, 1/4"Y	
7	75073GT	HINGE,.375X.120THK.,SLOTTED	1
7-	77778GT	PLATE,HINGE SUPPORT,BLUE PAINT	
8	81874GT	WELDMENT,LEFT COVER SUPPORT	1
8-	81876GT	WELDMENT,RIGHT COVER SUPPORT	
9	28301GT	GAS STRUT,250 LBS FORCE***	
9-	27377GT	RETAINER,GAS SPRING***	
9-	33555GT	BALL STUD**	
10	75076GT	KEEPER,LATCH (45363)	

303.1 Turntable Covers, S-60

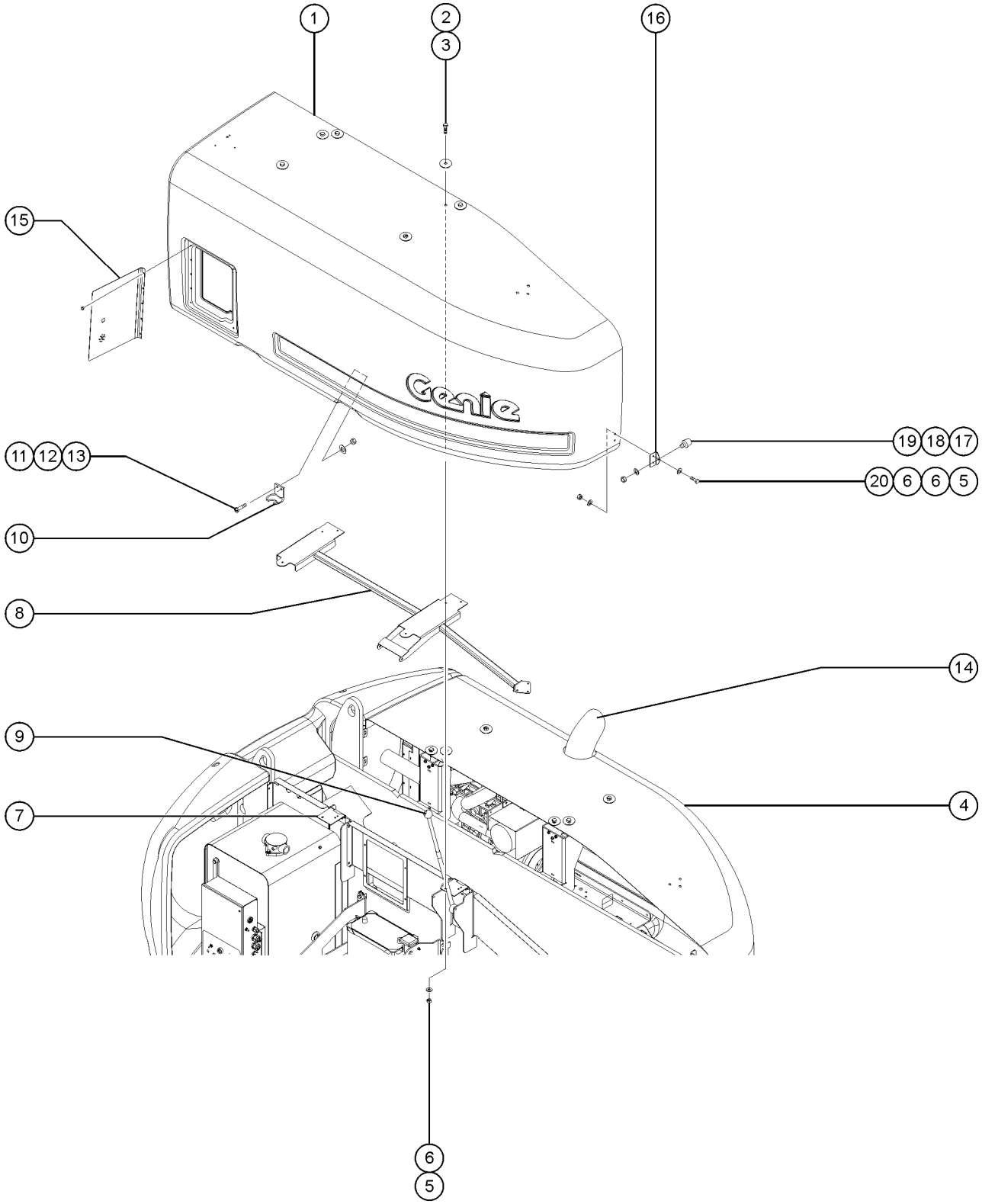

Item	Part No.	Description	Qty.
11	49816GT	SCREW,PHILLIPS,PHM,10-32 X .75	
12	6146GT	WASHER,FLAT,MS,#10,Y	
13	6178GT	NUT, NYLOCK, 10-32	
14	101964GT	WELDMENT,EXHAUST TUBE	1
15		Ref. COVER,GRND.CTRL.BOX,PAINTED (refer to 909.1)	
16	88106PGT	FORMING,COVER STOP,PAINT	
17	30973GT	BUMPER,RUBBER-1 X 1.25	
18	5397GT	WASHER, FLAT, USS, 5/16-18	
19	6782GT	NUT, NYLOCK, 5/16-18	
20	6090GT	SCREW, HHC, 1/4-20 X .75	

303.2 Turntable Covers, S-65

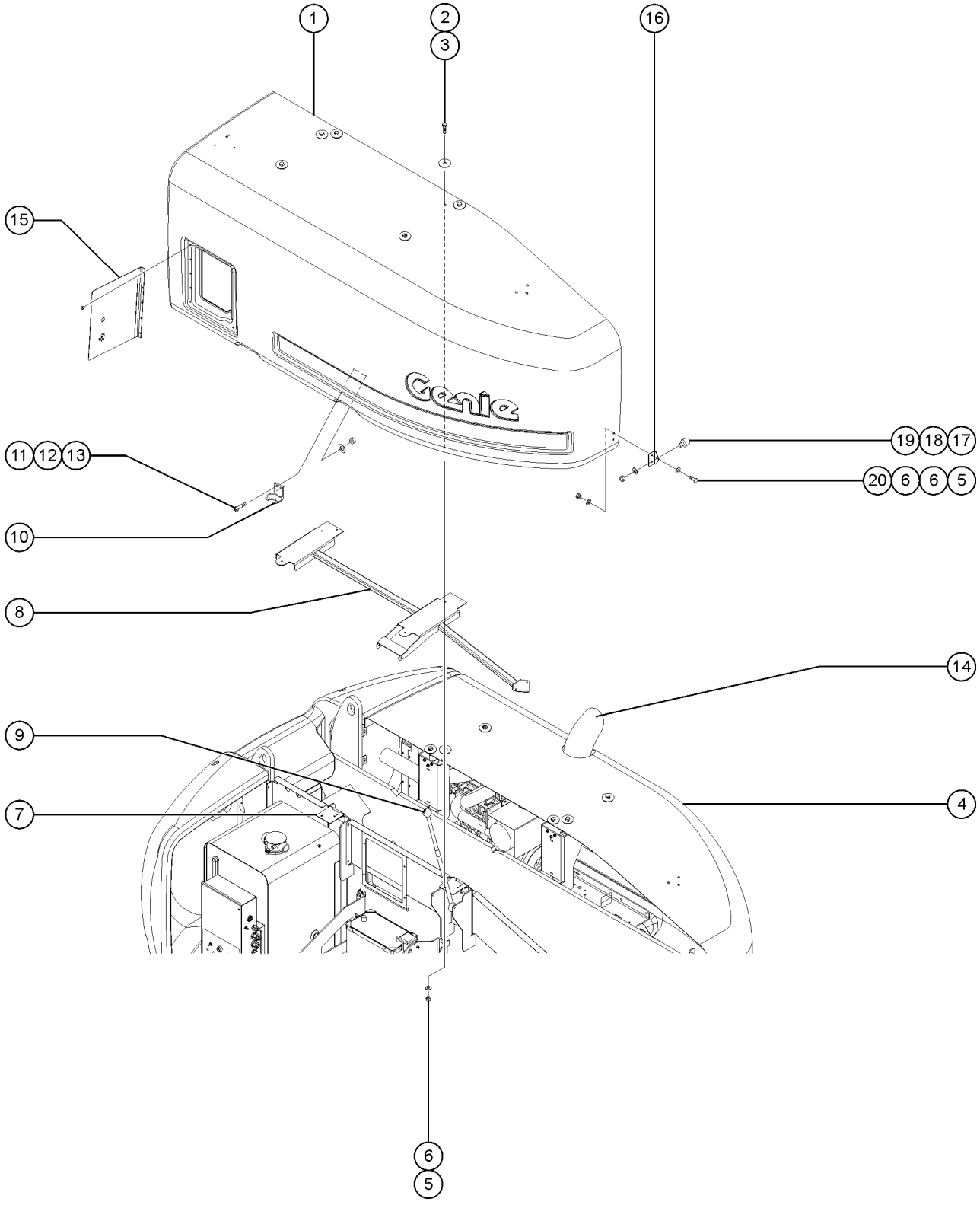

Item	Part No.	Description	Qty.
1	T108342GT	COVER ASSY.W/WORD DECALS LH S-65 (N. America), S-60 & S-65 (Australia), Gasoline/LPG	1
1-	T108343GT	COVER ASSY W/ SYMBOL DECALS LH S-65 (S. America/Asia), S-60 HC (Europe) & S-60/65 (Europe) , Gasoline/LPG	
1-	T108344GT	COVER ASSY.W/WORD DECALS LH S-65 (N. America), S-60 (Australia), S-60 & S-65 TraX (Australia), Diesel models	
1-	T108345GT	COVER ASSY W/ SYMBOL DECALS LH S-65 (S. America), S-65 TraX (S. America/Asia) S-60 HC (Europe), S-60 & S-65 TraX (Europe), Diesel models	
2	6888GT	SCREW, HHC, 1/4-20 X 1	
3	12906GT	WASHER,FENDER,.25 X 1.25 X.062	
4	139902GT	COVER ASSY W/ WORD DECALS RH	1
4-	139900GT	COVER ASSY W/ SYMBOL DECALS RH	
5	6091GT	NUT,NYLOCK,1/4-20	
6	6638GT	WASHER, FLAT, USS, 1/4"Y	
7	75073GT	HINGE,.375X.120THK.,SLOTTED	1
7-	77778GT	PLATE,HINGE SUPPORT,BLUE PAINT	
8	81874GT	WELDMENT,LEFT COVER SUPPORT	1
8-	81876GT	WELDMENT,RIGHT COVER SUPPORT	
9	28301GT	GAS STRUT,250 LBS FORCE***	
9-	27377GT	RETAINER,GAS SPRING***	
9-	33555GT	BALL STUD**	
10	75076GT	KEEPER,LATCH (45363)	
11	49816GT	SCREW,PHILLIPS,PHM,10-32 X .75	
12	6146GT	WASHER,FLAT,MS,#10,Y	
13	6178GT	NUT, NYLOCK, 10-32	
14	101964GT	WELDMENT,EXHAUST TUBE	1
15		Ref. COVER,GRND.CTRL.BOX,PAINTED (refer to 909.1)	
16	88106PGT	FORMING,COVER STOP,PAINT	
17	30973GT	BUMPER,RUBBER-1 X 1.25	
18	5397GT	WASHER, FLAT, USS, 5/16-18	
19	6782GT	NUT, NYLOCK, 5/16-18	
20	6090GT	SCREW, HHC, 1/4-20 X .75	

304.1 Engine Side

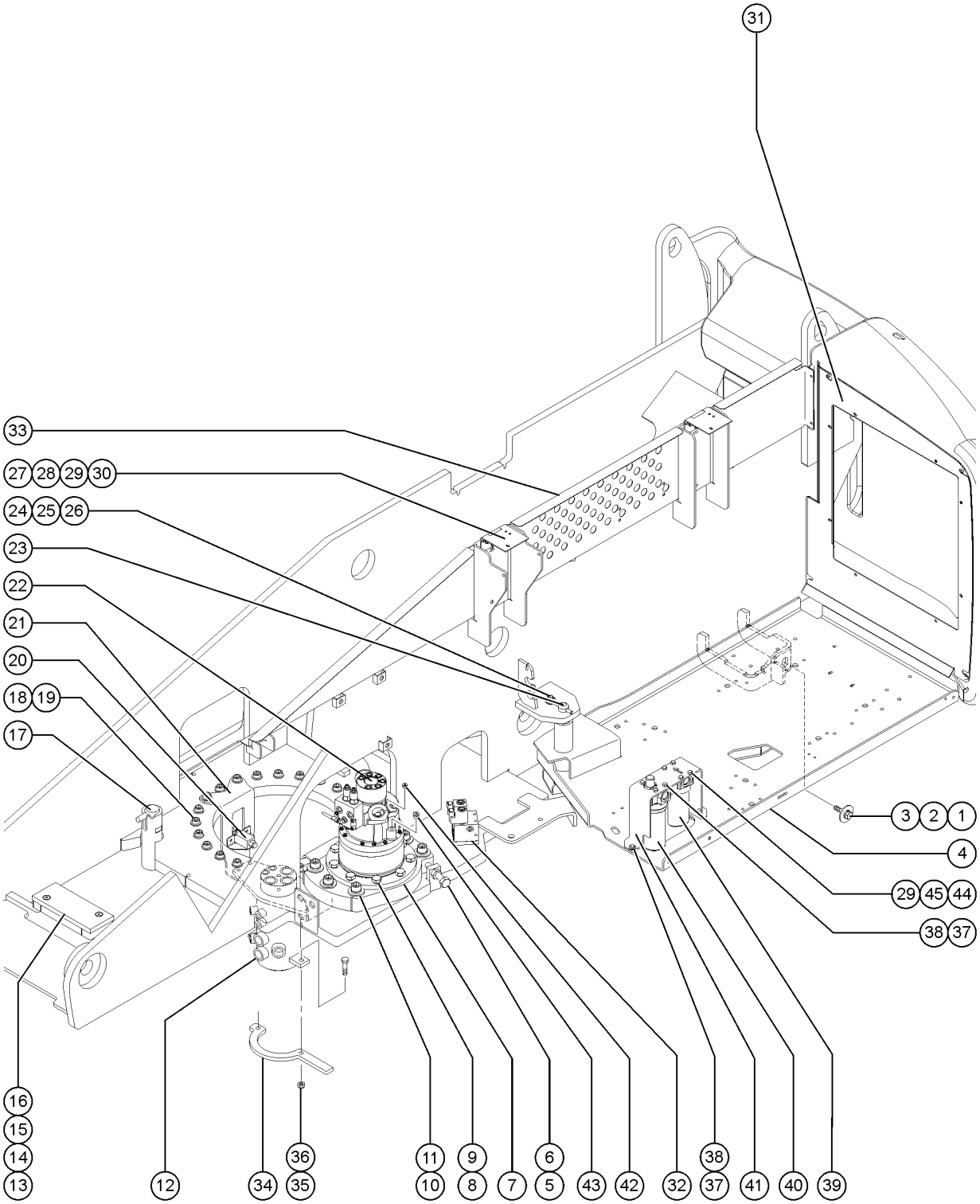

304.1 Engine Side

Item	Part No.	Description	Qty.
1	73455GT	SCREW,HHC,5/8-11 X 2.25 GR8	1
2	6036GT	WASHER,LOCK,.625 PLTD	
3	33418GT	WASHER,FLAT,.625 X 2.25 X.15	
4A	101540GT	ENGINE TRAY ASSY W/BEARINGS all models to SN 24509	1
4A-	35675GT	BEARING,FL,1.25IDX1.5ODX1.25L	2
4B	161613GT	ASSY,ENGINE TRAY,W/BEARINGS models with Ford engine from SN 24510 to SN 26027	1
4B-	35675GT	BEARING,FL,1.25IDX1.5ODX1.25L	2
4C	101540GT	ENGINE TRAY ASSY W/BEARINGS models with Deutz and Perkins engines from 24510 to SN 26027	1
4C-	35675GT	BEARING,FL,1.25IDX1.5ODX1.25L	2
4D	161613GT	ASSY,ENGINE TRAY,W/BEARINGS all models from SN 26028	1
4D-	35675GT	BEARING,FL,1.25IDX1.5ODX1.25L	2
5	61128GT	SCREW,HHC,3/4-10 X 4 FULL THRD	
6	6126GT	NUT,HEX,JAM,3/4-10	
7	77671GT	PLATE,BACKLASH ADJUSTMENT MACH	1
8	94747GT	SCREW,HHC,1/2-13 X 1.75 GRD 8	9
9	13066GT	WASHER,FLAT,.5 HARDENED	9
10	88212GT	SCREW,SHC,3/4-10 X 3.00,A574	6
11	33278GT	WASHER, FLAT, .75 HARDENED	6
12	89571GT	SWIVEL,HYD 8 PORT***	1
12-	94937GT	SEAL KIT,8-PORT SWIVEL	
12-	T106954GT	SEAL, O-RING LIP	
12-	T106955GT	SEAL, POLY, CHAMFER	
12-	T106957GT	SEAL, CAP, NOTCHED	
12-	T106961GT	SEAL, O-RING ENERGIZER	
12-	T106962GT	SEAL, CAP, NOTCHED	
13	77676GT	WEARPAD,BOOM REST	1
14	6610GT	SCREW,FHS,3/8-16 X 2 GRD.8	2
15	6097GT	WASHER, FLAT, USS, 3/8", Y	2

304.1 Engine Side

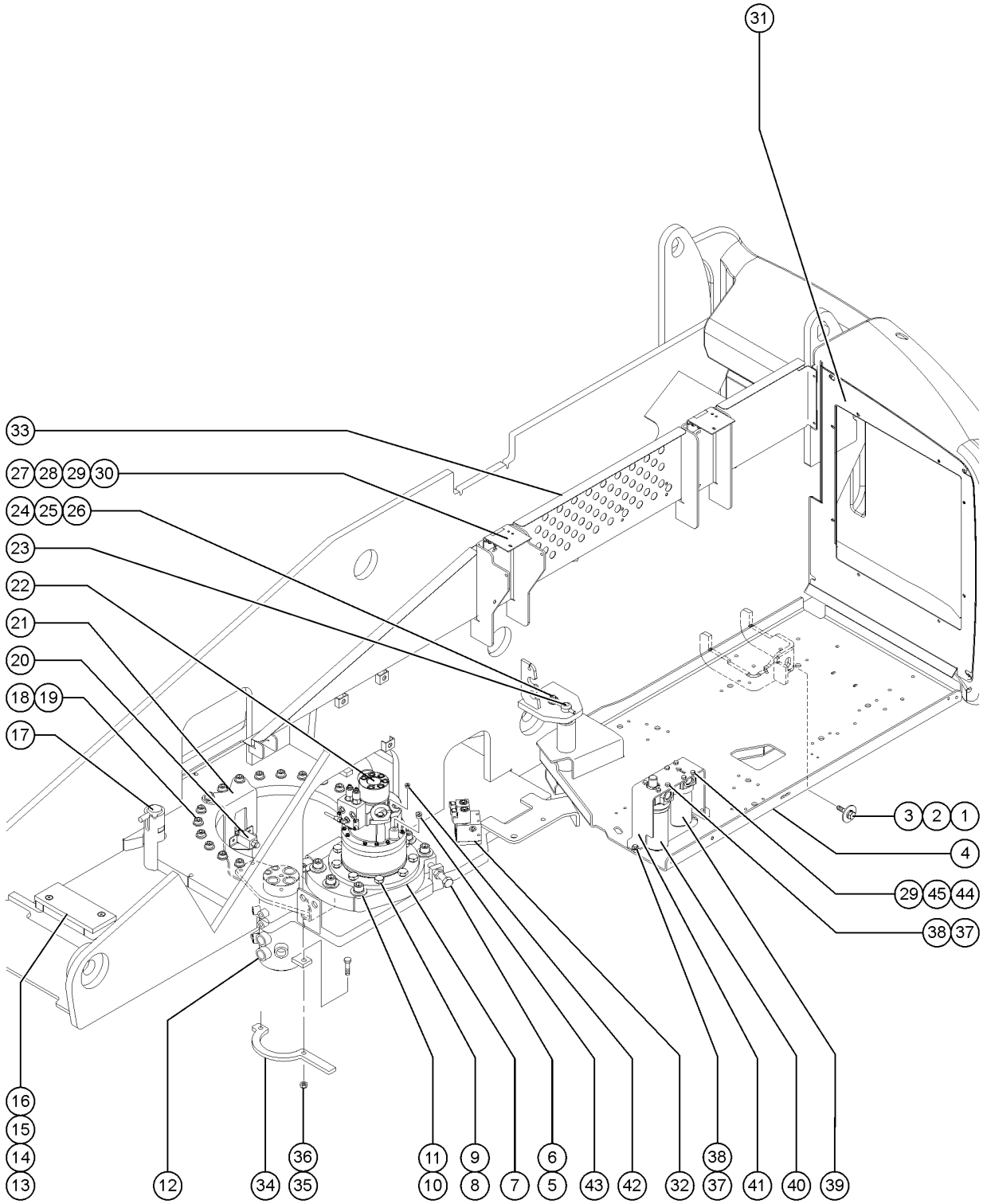

304.1 Engine Side

Item	Part No.	Description	Qty.
16	4828GT	NUT, NYLOCK, 3/8-16	2
17	81834GT	WELDMENT,TRANSPORT LOCK	
18	139865GT	SCREW,HHC,5/8-11 X 4.00 GR8 BO	24
19	13064GT	WASHER,FLAT,.625 HARDENED	24
20	88356-13103GT	SWITCH,LIMIT,W/RLLR ARM,NO/NC	1
20-	77666PGT	FORMING,DRIVE ENABLE LIMIT SW	
21	77665PGT	FORMING,HYD SWIVEL BRACKET	2
22A	1255768GT	SWING DRIVE ASSEMBLY Previous SWING DRIVE ASSEMBLY 139189 is no longer available, order complete assembly 1255768 for first time replacement	
22A-	1315824GT	BEARING/SEAL KIT (1255768)	
22A-	139308GT	SWING MOTOR COMPLETE*** (Used on swing drive 1255768)	
22A-	139309GT	CBV ASSEMBLY*** (Used on swing drive 1255768)	
22A-	139323GT	VALVE,COUNTERBAL,CBCA-LIN*** (Used on swing drive 1255768)	
22A-	139315GT	O-RING,MOTOR/BRAKE*** (Used on swing drive 1255768)	
22A-	58304GT	SHAFT,OUTPUT (Used on swing drive 1255768)	
22A-	1255769GT	SEAL KIT, SWING BRAKE (Used on swing drive 1255768)	
22A-	1255770GT	KIT, FRICTION DISC (Used on swing drive 1255768)	
22A-	1255771GT	KIT, BRAKE SPRING (Used on swing drive 1255768)	
22A-	1255772GT	KIT, SWING BRAKE REBUILD (Used on swing drive 1255768)	
22A-	1255773GT	BRAKE TUBING (Used on swing drive 1255768)	
22B		Ref. SWING DRIVE ASSEMBLY Previous SWING DRIVE ASSEMBLY 139189 is no longer available, order complete assembly 1255768 for first time replacement	
22B-	139308GT	SWING MOTOR COMPLETE*** (Used on swing drive 139189)	
22B-	139309GT	CBV ASSEMBLY*** (Used on swing drive 139189)	
22B-	139323GT	VALVE,COUNTERBAL,CBCA-LIN*** (Used on swing drive 139189)	
22B-	139315GT	O-RING,MOTOR/BRAKE*** (Used on swing drive 139189)	
22B-	58304GT	SHAFT,OUTPUT (Used on swing drive 139189)	
22B-	139310GT	BRAKE TUBING*** (Used on swing drive 139189)	
22B-	139311GT	KIT,FRICTION DISC*** (Used on swing drive 139189)	

304.1 Engine Side

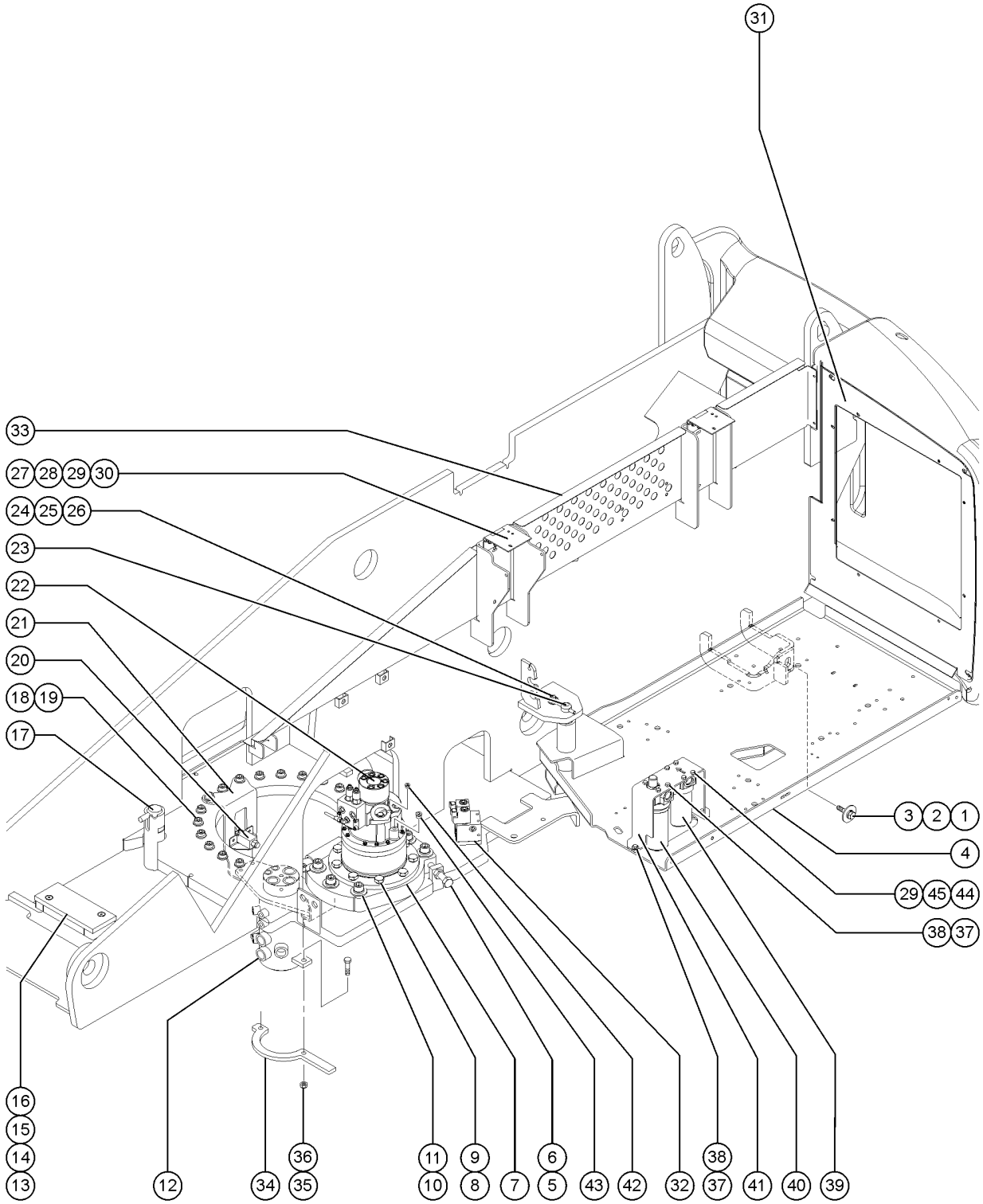

Item	Part No.	Description	Qty.
22B-	139312GT	KIT,BRAKE SPRING*** (Used on swing drive 139189)	
22B-	139313GT	SEAL KIT,SWING BRAKE*** (Used on swing drive 139189)	
22B-	139314GT	KIT,SWING BRAKE REBUILD*** (Used on swing drive 139189)	
22B-	94620GT	SEAL KIT,SWING TORQ HUB*** (Used on swing drive 139189)	
22B-	58596GT	BEARING KIT,OUTER (88921) (Used on swing drive 139189)	
22B-	58597GT	BEARING KIT,INNER (88921) (Used on swing drive 139189)	
23	81724GT	PIN,1.25 X 13.25 IN,CHAMFER	1
24	825019GT	ROD END, .375X3.69, ZAG	1
25	8516GT	SCREW, HCC, 3/8-16 X 1.50	
26	6021GT	WASHER, LOCK, .375	
27	75073GT	HINGE,.375X.120THK.,SLOTTED	
28	6888GT	SCREW, HHC, 1/4-20 X 1	
29	6638GT	WASHER, FLAT, USS, 1/4"Y	
30	6091GT	NUT,NYLOCK,1/4-20	
31	106172PGT	BAFFLE,AIR INTAKE,PAINTED*** Diesel models only	1
31-	110996PGT	BAFFLE,AIR INTAKE,FORD PNTD Ford models only	
32		REF: Brake and 2 Speed Manifold (refer to 406.1 or 406.2)	1
33	T106425GT	FORMING, BULKHEAD,RIGHT,S60/65	1
34	77803GT	PLATE,SWIVEL ROTATION STOP	
35	6198GT	NUT, NYLOCK, 1/2-13	
36	6096GT	SCREW,HHC,1/2-13 X 2 GR5	
37	8255GT	SCREW,HHC,3/8-16 X .75	
38	5397GT	WASHER, FLAT, USS, 5/16-18	
39		FILTER ASY,M PRESS,SAE8,WOIND* (77139) component no longer available	
39-	60857GT	FILTER,ELEMENT,BETA(5)=1000 for 77139	
39A	1267807GT	ASSEMBLY, MED. PRESS. FILTER, SAE8	
39A-	1268229GT	ELEMENT-5 MIC, PAPER, W/ BYPASS for 1267807	
40	60334GT	FILTER ASSY,HIGH PRESS SAE-12*	

304.1 Engine Side

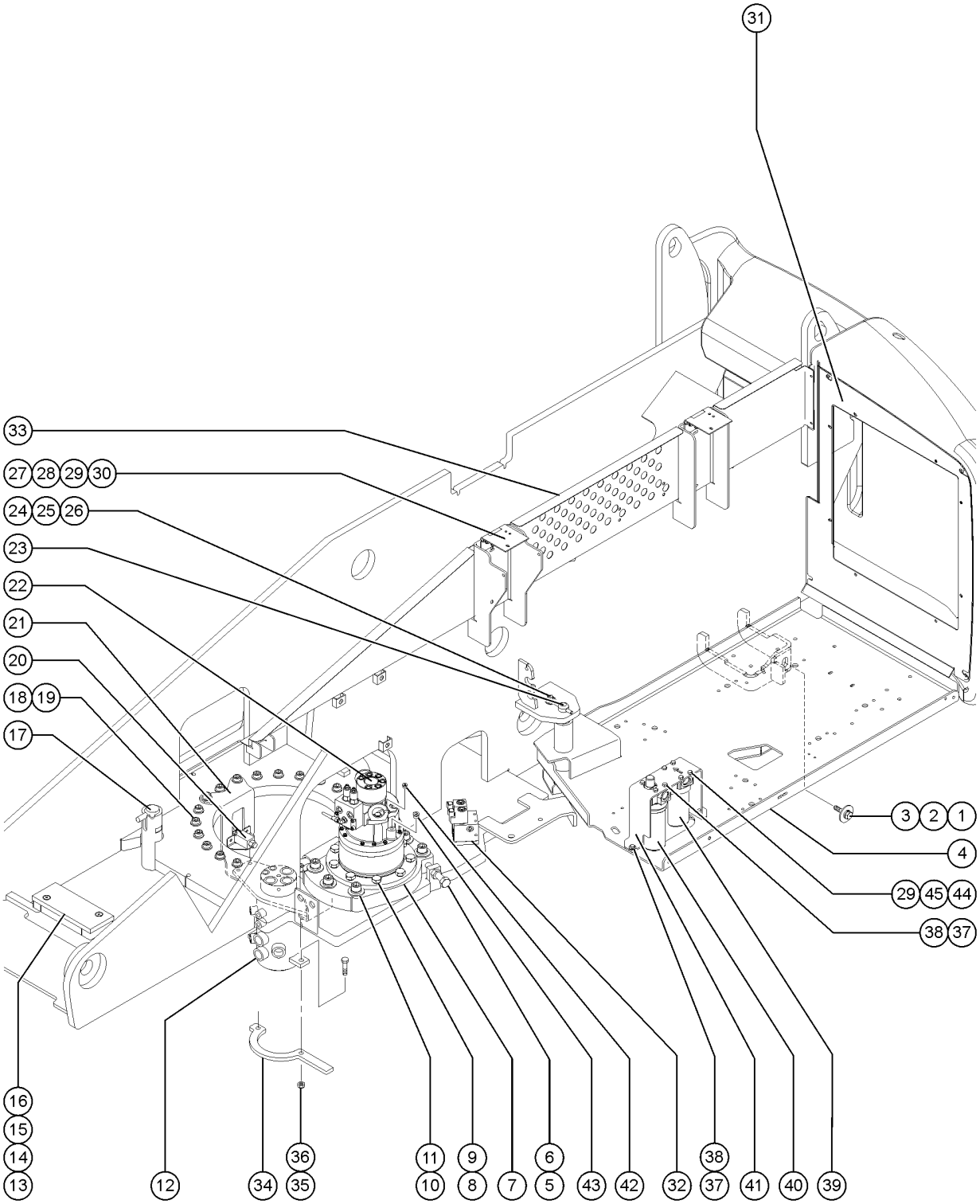

304.1 Engine Side

Item	Part No.	Description	Qty.
40-	1279465GT	BACKUP RING,71.60X67.20X1.40PTFE(60334)	
40-	1279466GT	O-RING,67.95X2.62-NBR-70SH(HF2P)(60334)	
40-	60857GT	FILTER,ELEMENT,BETA(5)=1000	
40-	58380GT	FILTER INDICATOR-(60334)	
41	81005GT	BRACKET,FILTER MOUNT	
42	39882GT	PLUG, HEX SOCKET, 090109B-4	1
43	109802GT	PLUG,ORB #6	1
44	6090GT	SCREW, HHC, 1/4-20 X .75	
45	6356GT	WASHER, LOCK, .25	

305.1 Ground Control Box - View 1, S-60

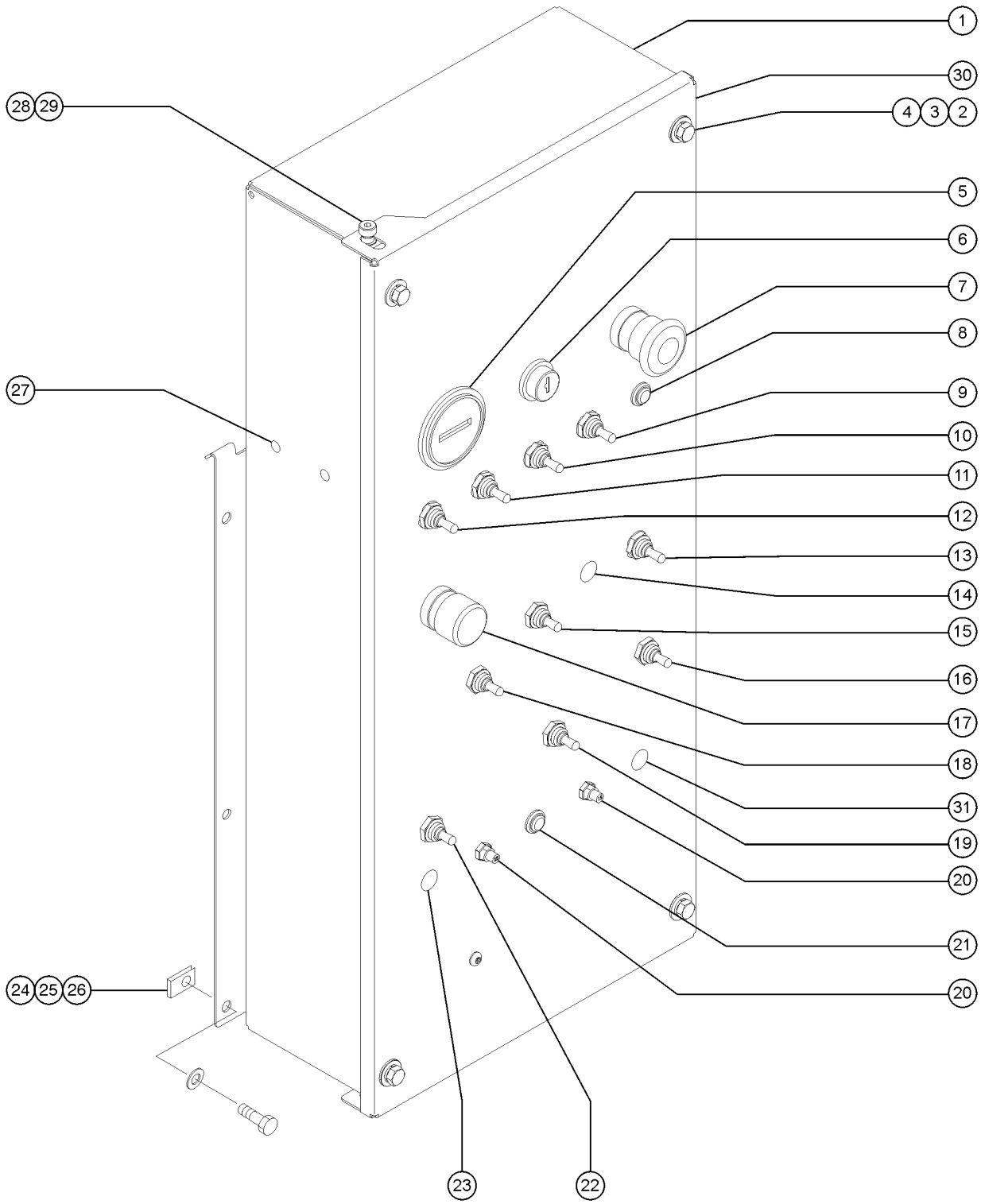

305.1 Ground Control Box - View 1, S-60

Item	Part No.	Description	Qty.
1		GROUND CONTROL BOX WITH DECAL models with word decals (Gas/LPG models). (no longer available, contact customer service)	1
1-		GROUND CONTROL BOX WITH DECAL models with word decals (Diesel models). (no longer available, contact customer service)	
1B	147840GT	WELDMENT, GROUND BOX, S60/65 models with symbol decals (Diesel and Gas/LPG models)	1
1B-	114219GT	DECAL,LABEL,RELAYS,S60&65	1
2	6090GT	SCREW, HHC, 1/4-20 X .75	
3	6356GT	WASHER, LOCK, .25	
4	6638GT	WASHER, FLAT, USS, 1/4"Y	
5	19506GT	HOUR METER, 10-80 VOLTS***	1
6	96008-SGT	KEYSWITCH,3 POS. W/KEYS***	1
6-	88827GT	GASKET,KEYSWITCH,PLASTIC***	
7	66812GT	BUTTON,PUSH,RED MUSHROOM HEAD	1
7-	73805GT	BASE,W/2 NC CONTACTS***	1
7-	58627GT	NUT	1
8A	824879GT	LIGHT,LED IND. RED 12V NH (Diesel models)	1
8B	824882GT	LT.LAMP IND. AMBER 12V ENG.NH (Gas/LPG models)	1
9	128204GT	SWITCH TOGGLE ASSY SPDT 2P MNT (Engine speed select)	1
10	128204GT	SWITCH TOGGLE ASSY SPDT 2P MNT (Gas/LPG select)	1
10-	229567GT	PLUG,SANTOPRENE .5 BLACK DOME (Diesel models)	1
11	128200GT	SWITCH TOGGLE ASSY SPDT 3P MOM (Start assist, glow plug) (diesel models)	1
11-	229567GT	PLUG,SANTOPRENE .5 BLACK DOME (Gas/LPG models)	1
12	128200GT	SWITCH TOGGLE ASSY SPDT 3P MOM (Starter)	1
12-	229567GT	PLUG,SANTOPRENE .5 BLACK DOME	1
13	128200GT	SWITCH TOGGLE ASSY SPDT 3P MOM (Platform level)	1
14A	229567GT	PLUG,SANTOPRENE .5 BLACK DOME (S-60)	2
15	128202GT	SWITCH TOGGLE ASSY DPDT 3P MOM (Boom extend/retract)	1
16	128202GT	SWITCH TOGGLE ASSY DPDT 3P MOM (Platform rotate)	1
17A	66813GT	BUTTON,PUSH,BLACK W/SEAL*** (Function enable)(single capacity models)	1
17A-	T107725GT	BASE, W/2 NO CONTACTS	

305.1 Ground Control Box - View 1, S-60

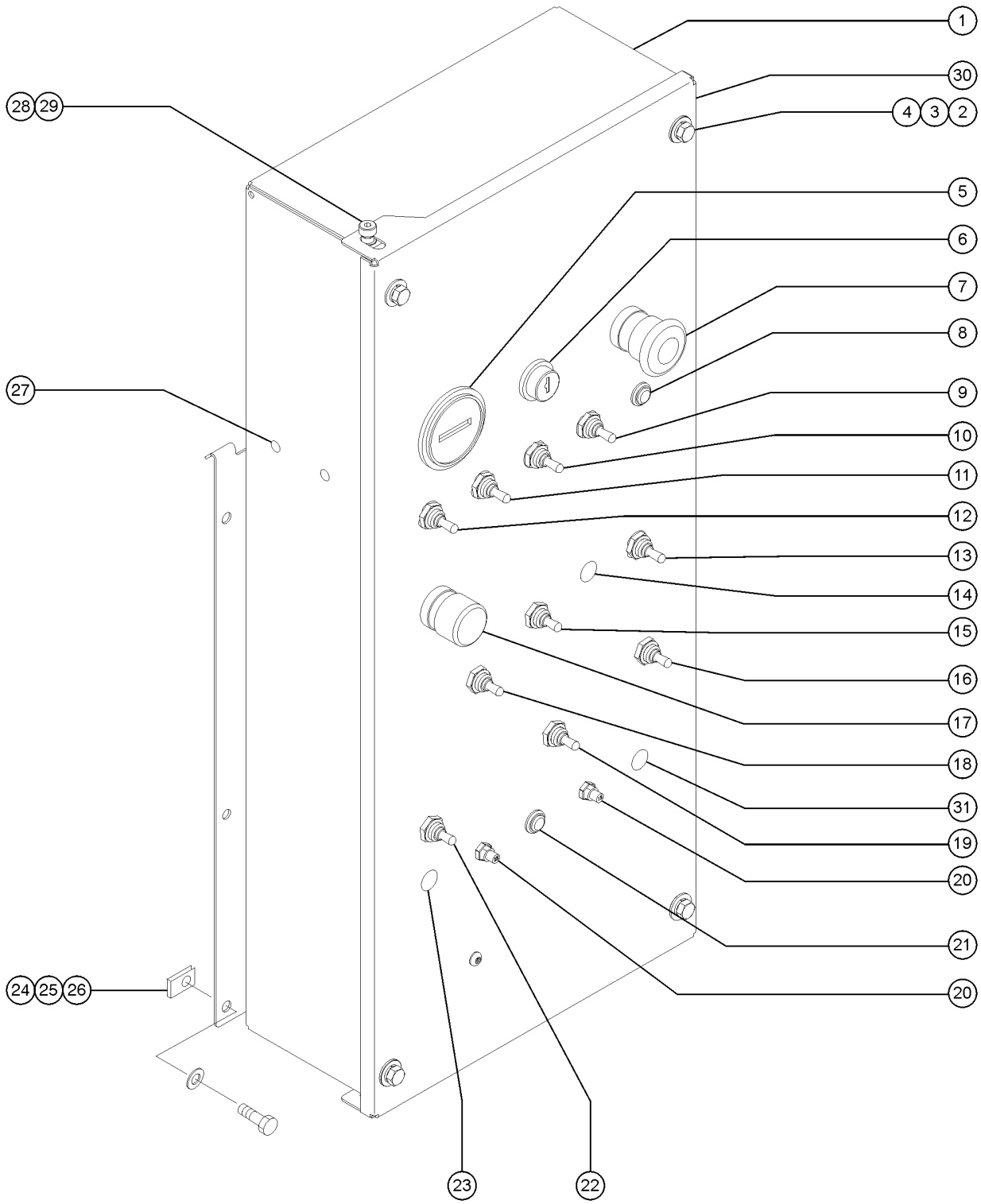

305.1 Ground Control Box - View 1, S-60

Item	Part No.	Description	Qty.
17B	80716GT	SWITCH,SELECTOR,BLACK (dual capacity models)	
17B-	T107725GT	BASE, W/2 NO CONTACTS	
18	128202GT	SWITCH TOGGLE ASSY DPDT 3P MOM (Boom up/down)	1
19	128202GT	SWITCH TOGGLE ASSY DPDT 3P MOM (Turntable rotate)	1
20	147094GT	ASSY, CIRCUIT BREAKER 15A (Controls)	2
21	824879GT	LIGHT,LED IND. RED 12V NH	1
22	128201GT	SWITCH TOGGLE ASSY DPDT 2P MOM (Auxiliary pump)	1
23A	45384GT	PLUG,NYLON .50 BLACK DOMED	
23B	824879GT	LIGHT,LED IND. RED 12V NH (Load sense) (CE models)	
24	56912GT	SPRING CLIP,1/4-20,.025-.15X.54,ZAG	
25	6638GT	WASHER, FLAT, USS, 1/4"Y	
26	6090GT	SCREW, HHC, 1/4-20 X .75	
27	42288GT	PLUG,NYLON .188 BLACK DOMED	
28	228463GT	SCREW,SHS,1/4-20 X .375 ZINC	2
29	T107520GT	NUTSERT,LP KNURLED,1/4-20X.165	2
30	T108351GT	GROUND CONTROL BOX LID WITH DECAL S-60/65 (Australia & Europe), S-60/65 TraX (Australia & Europe), S-65 (N. America & S. America/Asia), S-65 TraX (N. America & S. America/Asia), S-60HC (Europe) Models with word decals	1
30-	T108347GT	GROUND CONTROL BOX LID WITH DECAL S-60 TraX (N. America, S. America/Asia)	
30-	T108348GT	GROUND CONTROL BOX LID WITH DECAL S-60X (N. America, S. America/Asia)	
30-	T108349GT	GROUND CONTROL BOX LID WITH DECAL S-60XC (N. America, S. America/Asia)	
31A	21858GT	PLUG,NYLON .38 BLACK DOMED	
31B	147094GT	ASSY, CIRCUIT BREAKER 15A (models with worklight or oil cooler option)	

305.2 Ground Control Box - View 1, S-65

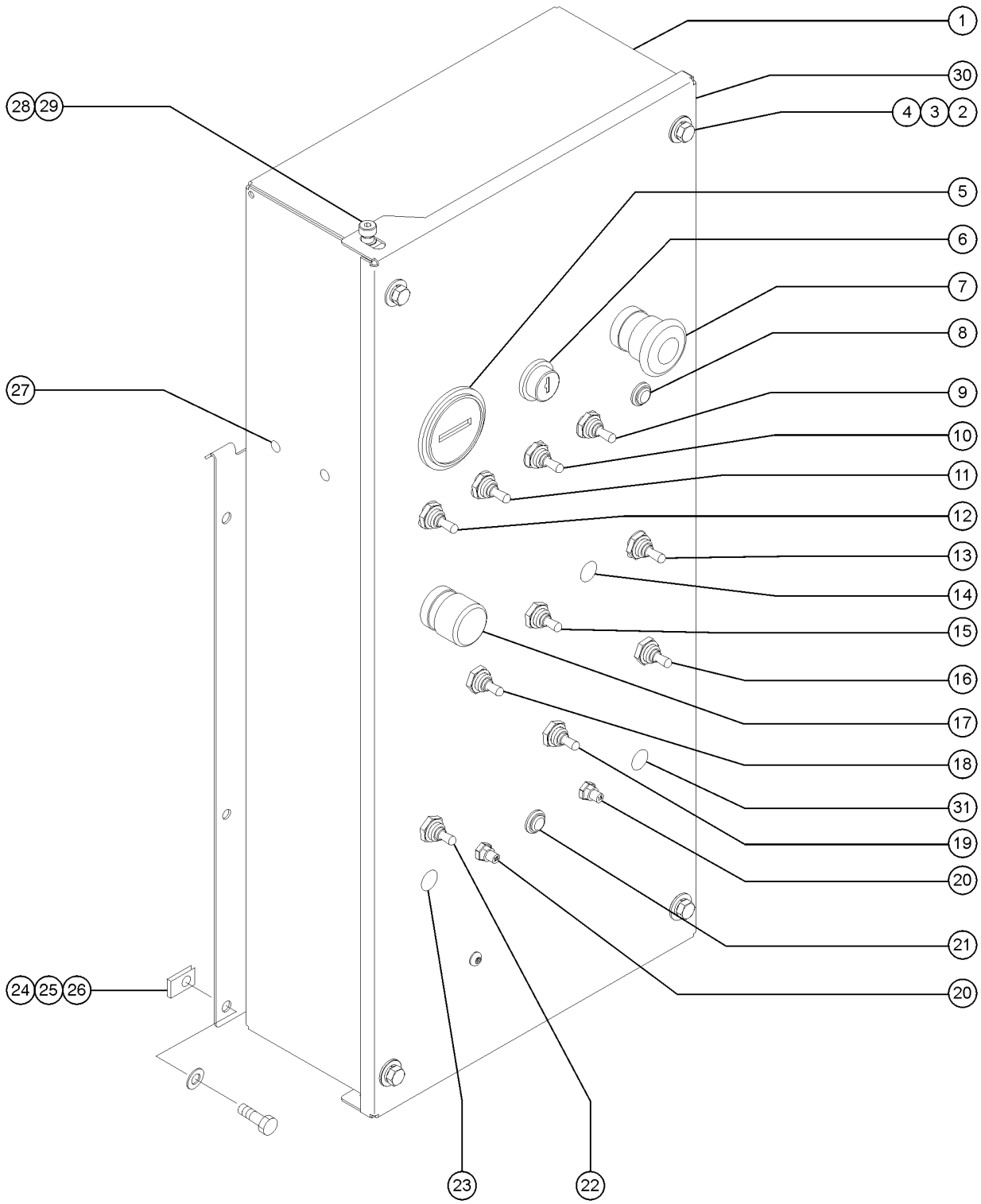

305.2 Ground Control Box - View 1, S-65

Item	Part No.	Description	Qty.
1		GROUND CONTROL BOX WITH DECAL models with word decals (Gas/LPG models). (no longer available, contact customer service)	1
1-		GROUND CONTROL BOX WITH DECAL models with word decals (Diesel models). (no longer available, contact customer service)	
1B	147840GT	WELDMENT, GROUND BOX, S60/65 models with symbol decals (Diesel and Gas/LPG models)	1
1B-	114219GT	DECAL,LABEL,RELAYS,S60&65	1
2	6090GT	SCREW, HHC, 1/4-20 X .75	
3	6356GT	WASHER, LOCK, .25	
4	6638GT	WASHER, FLAT, USS, 1/4"Y	
5	19506GT	HOUR METER, 10-80 VOLTS***	1
6	96008-SGT	KEYSWITCH,3 POS. W/KEYS***	1
6-	88827GT	GASKET,KEYSWITCH,PLASTIC***	
7	66812GT	BUTTON,PUSH,RED MUSHROOM HEAD	1
7-	73805GT	BASE,W/2 NC CONTACTS***	1
7-	58627GT	NUT	1
8A	824879GT	LIGHT,LED IND. RED 12V NH (Diesel models)	1
8B	824882GT	LT.LAMP IND. AMBER 12V ENG.NH (Gas/LPG models)	1
9	128204GT	SWITCH TOGGLE ASSY SPDT 2P MNT (Engine speed select)	1
10	128204GT	SWITCH TOGGLE ASSY SPDT 2P MNT (Gas/LPG select)	1
10-	229567GT	PLUG,SANTOPRENE .5 BLACK DOME (Diesel models)	1
11	128200GT	SWITCH TOGGLE ASSY SPDT 3P MOM (Start assist, glow plug) (diesel models)	1
11-	229567GT	PLUG,SANTOPRENE .5 BLACK DOME (Gas/LPG models)	1
12	128200GT	SWITCH TOGGLE ASSY SPDT 3P MOM (Starter)	1
12-	229567GT	PLUG,SANTOPRENE .5 BLACK DOME	1
13	128200GT	SWITCH TOGGLE ASSY SPDT 3P MOM (Platform level)	1
14B	229567GT	PLUG,SANTOPRENE .5 BLACK DOME (Jib up/down) (S-65)	2
15	128202GT	SWITCH TOGGLE ASSY DPDT 3P MOM (Boom extend/retract)	1
16	128202GT	SWITCH TOGGLE ASSY DPDT 3P MOM (Platform rotate)	1
17A	66813GT	BUTTON,PUSH,BLACK W/SEAL*** (Function enable)(single capacity models)	1
17A-	T107725GT	BASE, W/2 NO CONTACTS	

305.2 Ground Control Box - View 1, S-65

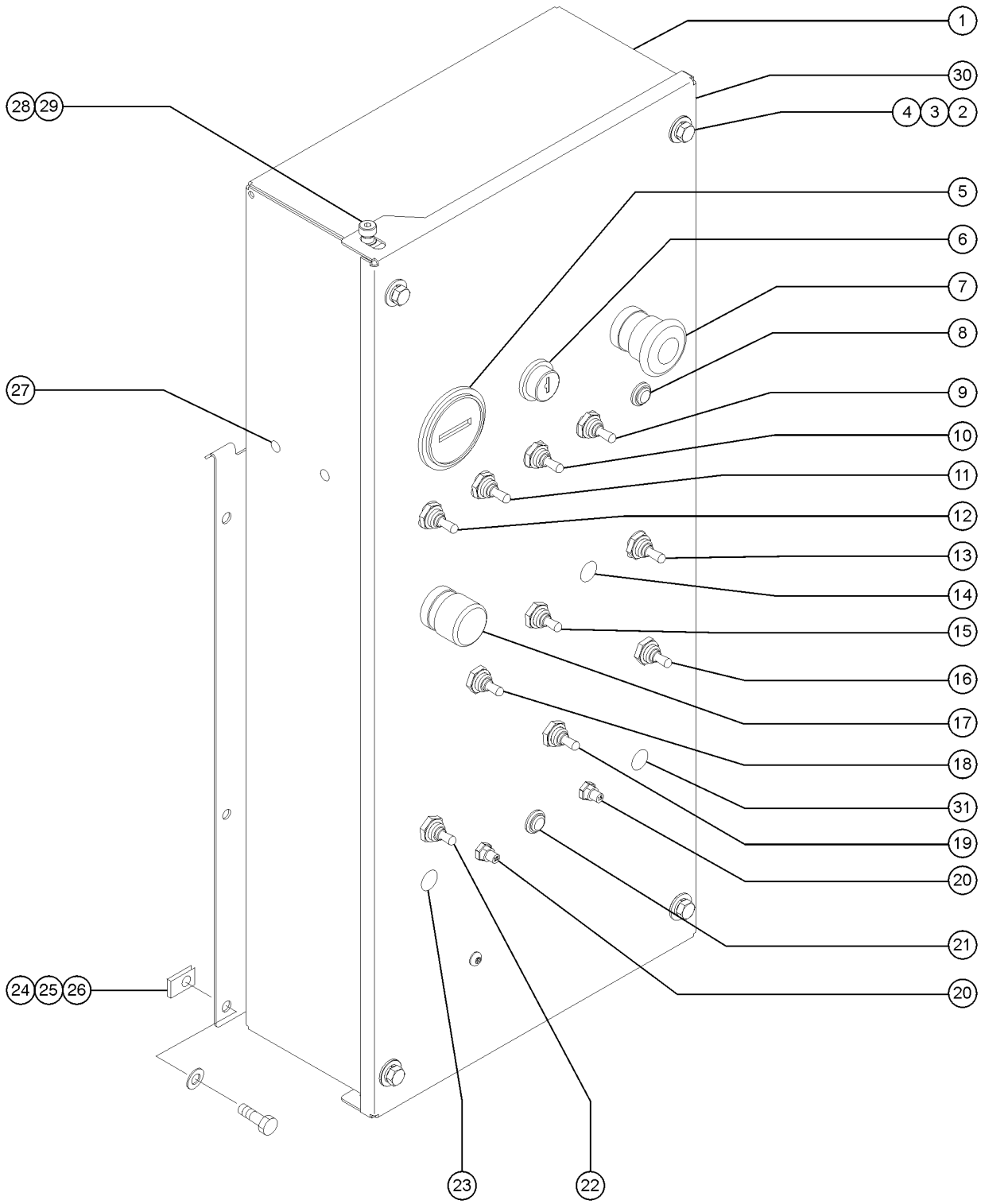

305.2 Ground Control Box - View 1, S-65

Item	Part No.	Description	Qty.
17B	80716GT	SWITCH,SELECTOR,BLACK (dual capacity models)	
17B-	T107725GT	BASE, W/2 NO CONTACTS	
18	128202GT	SWITCH TOGGLE ASSY DPDT 3P MOM (Boom up/down)	1
19	128202GT	SWITCH TOGGLE ASSY DPDT 3P MOM (Turntable rotate)	1
20	147094GT	ASSY, CIRCUIT BREAKER 15A (Controls)	2
21	824879GT	LIGHT,LED IND. RED 12V NH	1
22	128201GT	SWITCH TOGGLE ASSY DPDT 2P MOM (Auxiliary pump)	1
23A	45384GT	PLUG,NYLON .50 BLACK DOMED	
23B	824879GT	LIGHT,LED IND. RED 12V NH (Load sense) (CE models)	
24	56912GT	SPRING CLIP,1/4-20,.025-.15X.54,ZAG	
25	6638GT	WASHER, FLAT, USS, 1/4"Y	
26	6090GT	SCREW, HHC, 1/4-20 X .75	
27	42288GT	PLUG,NYLON .188 BLACK DOMED	
28	228463GT	SCREW,SHS,1/4-20 X .375 ZINC	2
29	T107520GT	NUTSERT,LP KNURLED,1/4-20X.165	2
30	T108351GT	GROUND CONTROL BOX LID WITH DECAL S-60/65 (Australia & Europe), S-60/65 TraX (Australia & Europe), S-65 (N. America & S. America/Asia), S-65 TraX (N. America & S. America/Asia), S-60HC (Europe) Models with word decals	1
30-	T108347GT	GROUND CONTROL BOX LID WITH DECAL S-60 TraX (N. America, S. America/Asia)	
30-	T108348GT	GROUND CONTROL BOX LID WITH DECAL S-60X (N. America, S. America/Asia)	
30-	T108349GT	GROUND CONTROL BOX LID WITH DECAL S-60XC (N. America, S. America/Asia)	
31A	21858GT	PLUG,NYLON .38 BLACK DOMED	1
31B	147094GT	ASSY, CIRCUIT BREAKER 15A (models with worklight or oil cooler option)	1

306.1 Ground Control Box - View 2

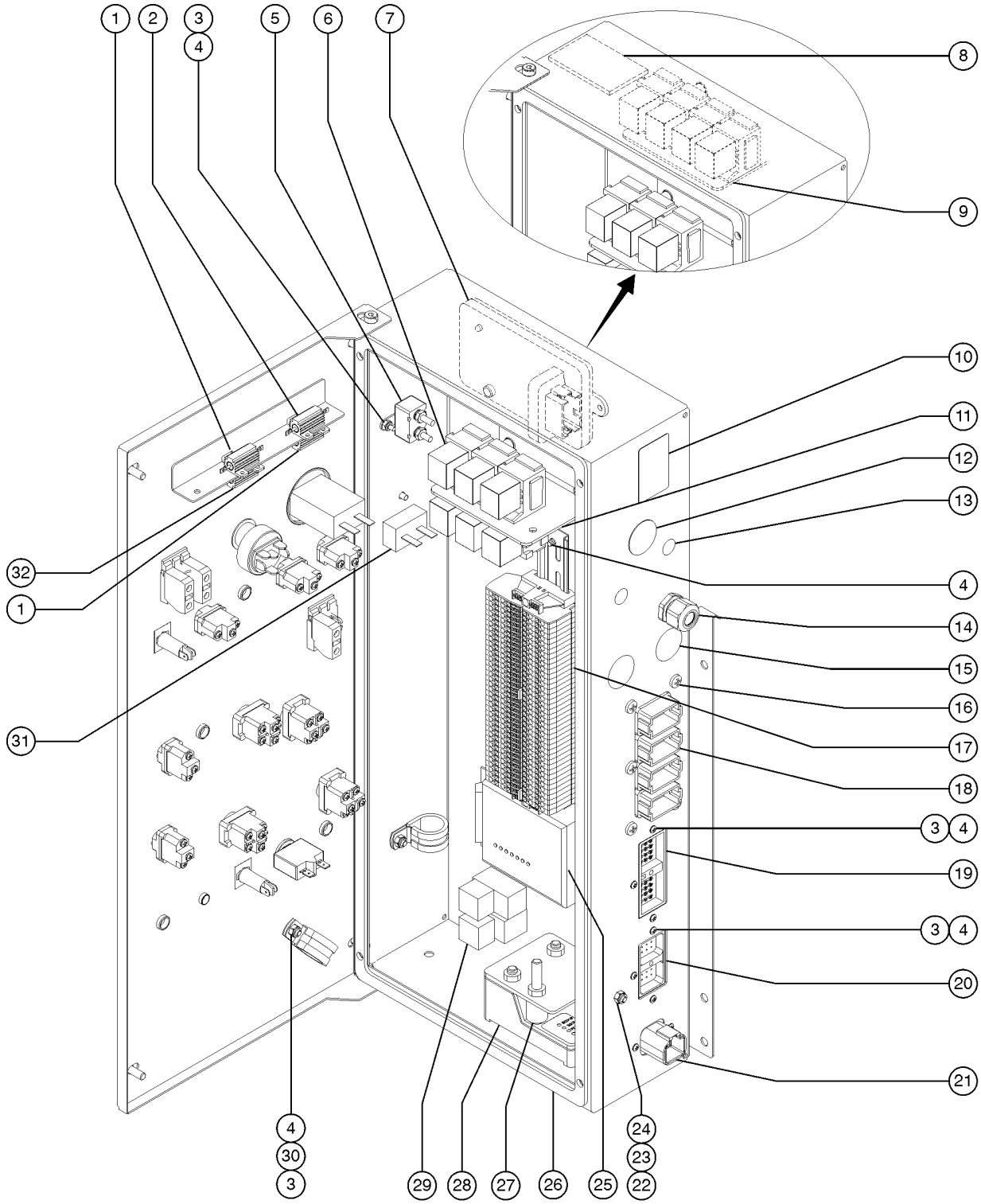

306.1 Ground Control Box - View 2

Item	Part No.	Description	Qty.
-	121846GT	RELAY, TIME DELAY, 2 SEC, 10A models with load sense	
-	61225GT	RELAY,12VDC,70AMP,SEALED (glow plug)	
1	89575GT	RESISTOR,7.5 OHM,25 WATT,1PCNT	2
2	40614GT	RESISTOR,5 OHM,25W***	1
3	6178GT	NUT, NYLOCK, 10-32	
4	54365GT	SCREW,PHIL,PHM,10-32 X .5,SSTL	
5	128935GT	CIRCUIT BKR 10A TYPE 2 METAL	1
6A	34052GT	RELAY,SPDT,12V(AUTO) PLUG IN** Diesel models	6
6B	34052GT	RELAY,SPDT,12V(AUTO) PLUG IN** Gas/LPG models	4
6B-	34053GT	ASSY,RELAY SOCKET, AUTO individual parts no longer available	
6B-	54365GT	SCREW,PHIL,PHM,10-32 X .5,SSTL	2
6B-	6178GT	NUT, NYLOCK, 10-32	2
7	128045GT	MODULE,LOAD SENSE 2007 CE models only	1
7-	54365GT	SCREW,PHIL,PHM,10-32 X .5,SSTL	2
7-	6178GT	NUT, NYLOCK, 10-32	2
8	30997GT	CORROSION INHIBITOR,FOAM	1
9	T107130GT	HARNESS,GBOX,DUAL CAP RELAY	1
10	110280GT	PLUG,NYLON, .94X1.65 BLK D0MED	1
11	54534GT	ANGLE,RELAY MNT,W/NUTSERTS,PNT	1
11-	23404GT	NUTSERT,1/4-20,STEEL CAD PLTD	
11-	6638GT	WASHER, FLAT, USS, 1/4"Y	
11-	7339GT	SCREW,HHC,1/4-20 X .5	
12	45385GT	PLUG,NYLON 1.12 BLACK DOMED	1
13	45384GT	PLUG,NYLON .50 BLACK DOMED	1
14	7057GT	CONN. SQZ,1/2NPT .39-.56 MED.	
15	15243GT	PLUG,NYLON .875 BLACK DOMED	2
16	73803GT	SCREW,SHM,PHP, #12 X .75	6
17	217043GT	ASSY, TERMINAL RAIL	1

306.1 Ground Control Box - View 2

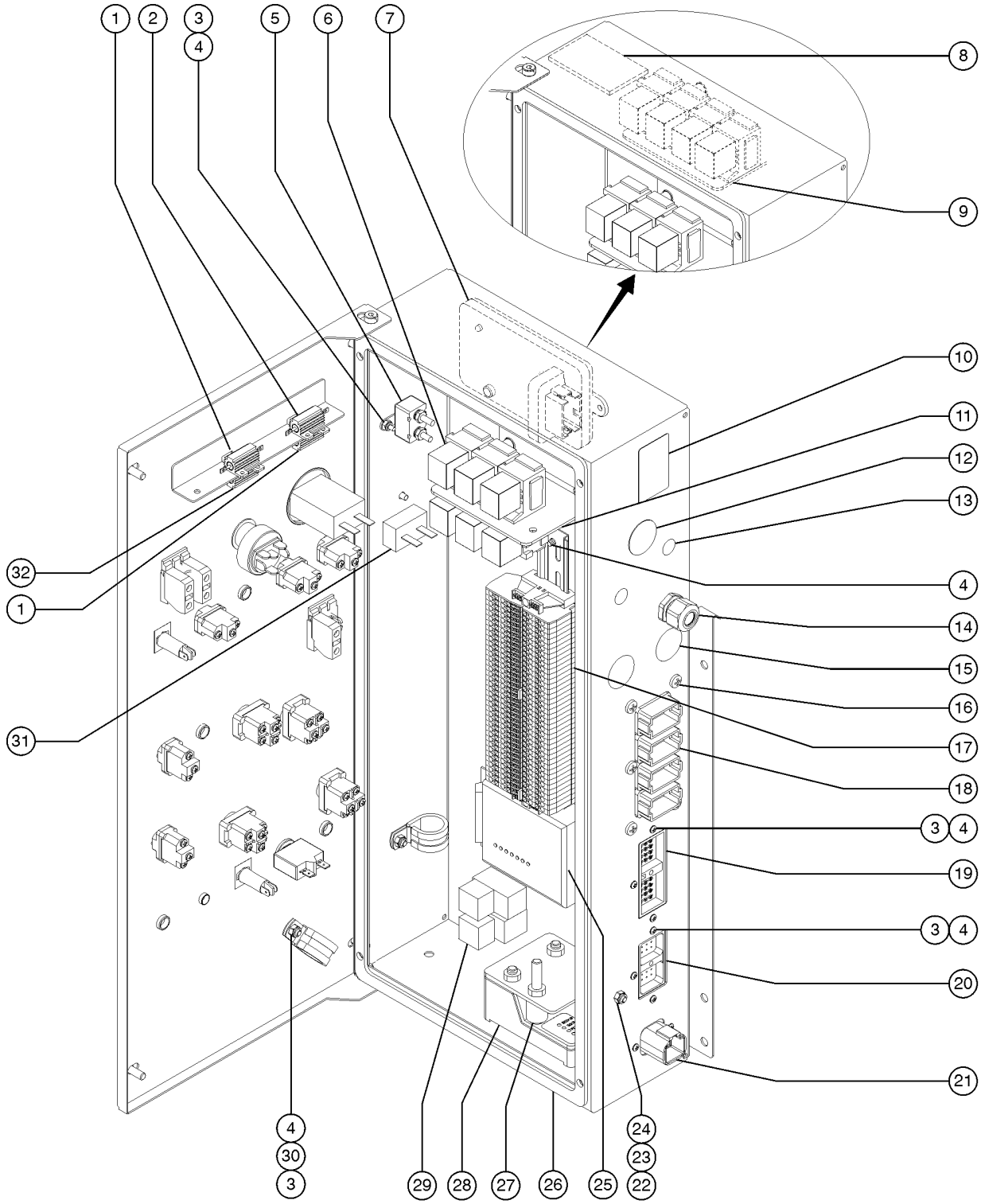

306.1 Ground Control Box - View 2

Item	Part No.	Description	Qty.
17-	217046GT	KIT, TERMINAL BLOCK	
17-	33422GT	DIN RAIL,17"	1
17-	217044GT	TERMINAL BLOCK, WIELAND	43
17-	217045GT	TERMINAL BLOCK, END PLATE	1
17-	74913GT	END STOP, DIN RAIL,SCREW CLAMP	2
17-	74917GT	JUMPER COMB, 2-WAY,WIELAND	4
17-	74918GT	JUMPER COMB, 3-WAY,WIELAND	1
18	73736GT	CONN,RECEP 48 WAY,4 X 12	1
19	73754GT	CONN,RECEP 40 WAY,W/FLANGE	1
20	73753GT	CONN,RECEP 24 WAY,W/FLANGE	1
21	73717GT	CONN, RECEP, 4 WAY, DEUTSCH, DTP, FLANGE	1
22	6091GT	NUT,NYLOCK,1/4-20	
23	25926GT	WASHER,FLAT,M6 PLTD.	
24	6888GT	SCREW, HHC, 1/4-20 X 1	
25	56057GT	MODULE,IGNITION/START,12/24V diesel models only	1
26	121599GT	GASKET,GBOX,S80/85 2008	1
27A	102357GT	POTENTIOMETER ASSY, WELDER models with welder option	1
27B	106140PGT	BRACKET,1K OHM 10-TURN POT,PNT models with welder option	1
28	106657GT	MODULE,CONTROL,HI AMP models with welder option	1
29B	33607GT	RELAY,OMRON,DPDT,12V models with welder option	2
29A	147455GT	HARNESS, OMRON RELAY, CR66 models with welder option	
29C	33608GT	RELAY,SOCKET,OMRON models with welder option	2
30	13268GT	CLAMP,0.75,#12 X 1/4,RUB CUSH	
31	106637GT	MODULE,TIME DELAY ON BREAK 4S models with welder option	1
32A	27287GT	RESISTOR,10 OHM,25 WATT dual capacity models	1
32B	40614GT	RESISTOR,5 OHM,25W*** S-60, S-65, S-60HC, S-60TX, S-65TX	

307.1 Wire Harness Diagram, S-60

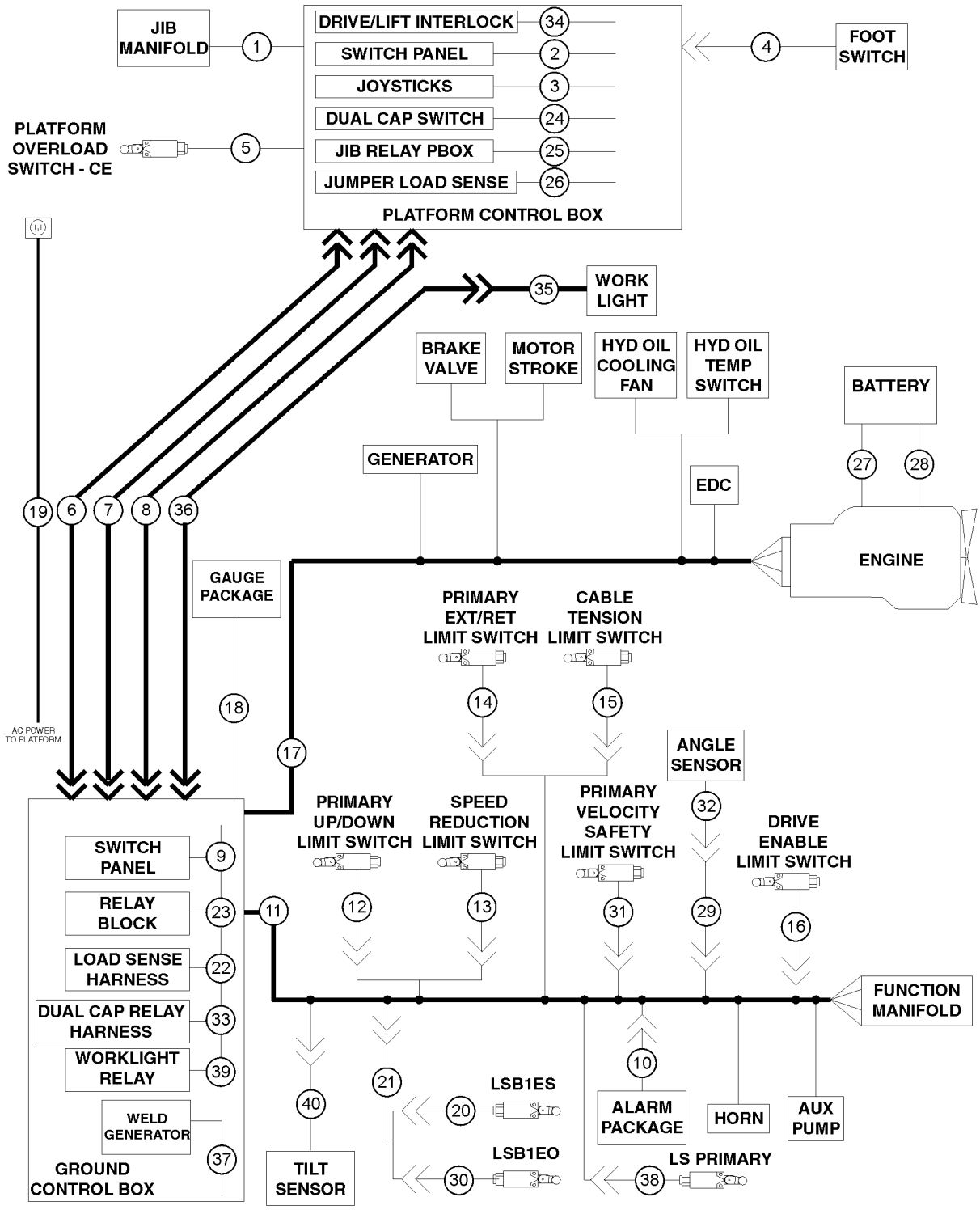

Item	Part No.	Description	Qty.
A	58253GT	KIT,REPAIR,DEUTSCH PLUG,W/TUBE small kit	
B	83129GT	CONNECTOR KIT,DEUTSCH*** large kit	
C	61794GT	CRIMPER,DEUTSCH,LIGHT DUTY*** tool	
D	101191GT	WIRE LOOM,1"DIA.SLIT,HI TEMP	
E	49219GT	SLEEVE,NYLON,2.19 ID,BULK near platform; 48 inches required	48 inches
F	110390GT	HARNESS,BOOM CABLE HIGH CAP. S-60HC	
-	110803GT	HARNESS PROGRAM CAN PLUS1 S-60HC	
-	110987GT	SOFTWARE,S60HC,TCON,+1 S-60HC	
-	110988GT	SOFTWARE,S60HC,SCON,+1 S-60HC	
G	1264822GT	KIT, TRC RETROFIT, STNDRD Telematics (includes 1264834)	
G-	1264834GT	INSTRN, TRC RETROFIT, STNDRD	
-	119607GT	SOFTWARE,S60HC,DIAGNOSTIC,+1 S-60HC	
1	101080GT	HARNESS,JIB SELECT MANIFOLD S-65	1
2	147642GT	HARNESS,PBOX,S60/65	1
3	147643GT	HARN,PBOX,JOYSTICK,S60/65	1
4		REF: Foot Switch Assembly (refer to 701.1)	
5	121848GT	ASSY,LS,LOAD SENSE,38.5 IN	1
6B	139738GT	HARNESS, 18/22, CABLE NJ S-60 (green/brown)	1
7C	139736GT	HARNESS, 18/19, CABLE NJ S-60, to SN 26286 (grey/black)	1
7D	823918GT	HARNESS,18/22,CABLE2 NJ S-60, from SN 26287	1
8B	139734GT	HARNESS, 12/3 12V TO PLAT NJ	1
9	147652GT	HARNESS,GBOX WIRING	1
10	147300GT	HARNESS, ALARM PACKAGE	1
11	147650GT	HARN,FUNCT MANIFOLD,S60/65	1
12	139832GT	HARNESS, LS, OP, PRI ANGLE	1
13	139835GT	HARNESS, LS, OP, PRI, VELOCITY	1
14	139836GT	HARNESS, LS, OP, PRIMARY	1

307.1 Wire Harness Diagram, S-60

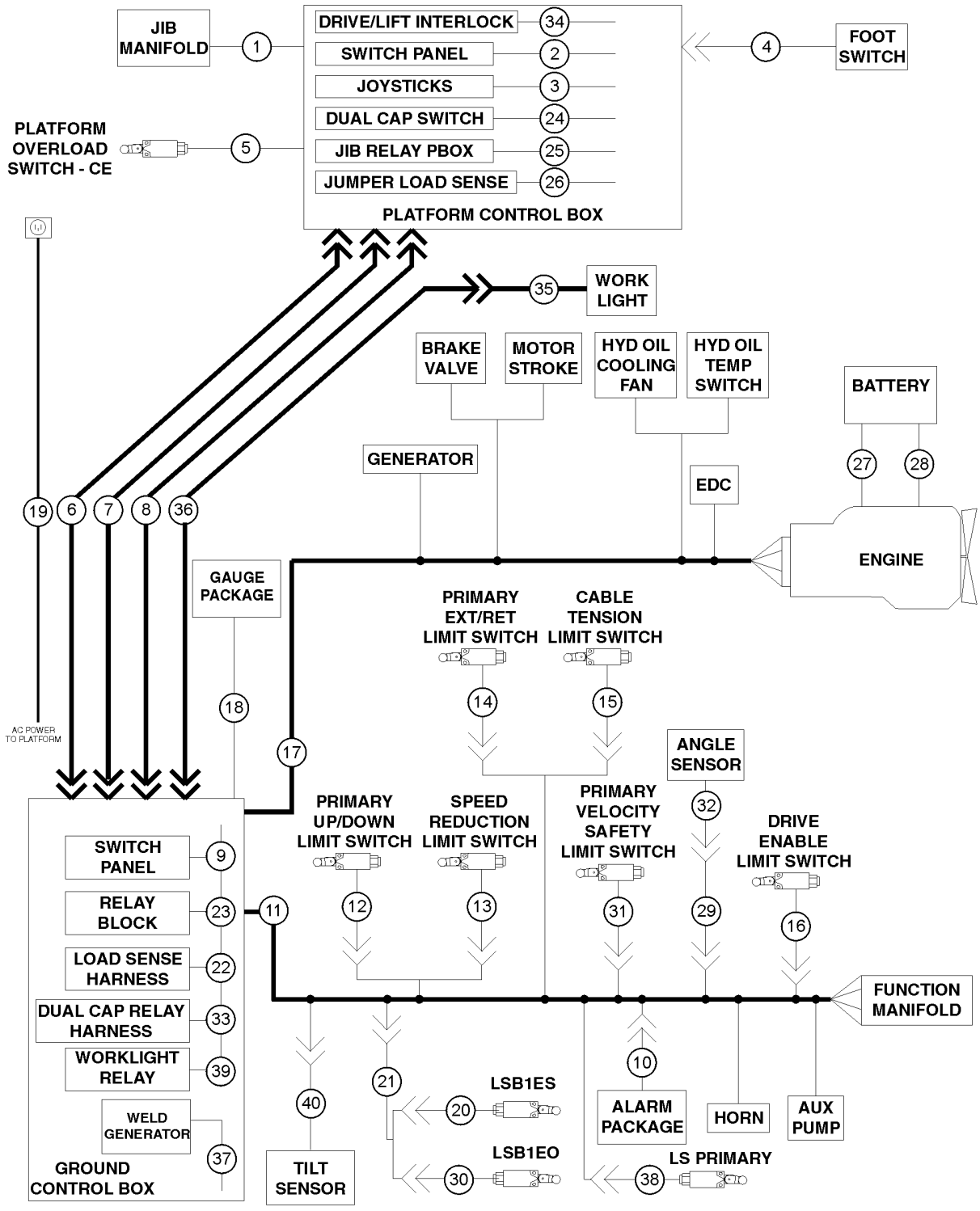

Item	Part No.	Description	Qty.
15	139833GT	HARNESS, LS, OP, CABLE TENSION	1
16	139834GT	HARNESS,LS,DRIVE ENABLE	1
17	88810GT	HARNESS,DEUTZ ENGINE	1
17-	110268GT	HARNESS PERKINS ENGINE S60 ALT	1
17-	119777GT	HARNESS,FORD DSG423,S60	1
17-	119483GT	FUEL JUMPER HARNESS Ford modes; from SN 19677	
17-	147428GT	HARNESS, FORD STARTER Ford models; from SN 21009)	1
17-	122053GT	HARNESS,S60 TURBO DEUTZ SPEC	1
18	107552GT	HARNESS,GAUGE OPT.,S60 DEUTZ	1
18-	T108415GT	HARNESS,ENGINE GAUGE	1
19B	139732GT	HARNESS, AC POWER TO PLAT NJ S-60	1
19B-	228322GT	ASSY,CABLE,12.5KW WELDER	1
20	T108321GT	HARN,LS SAFETY,PRI.DUAL CAP	1
21	147654GT	HARN,LS CABLE,S60 DUAL CAP S-60X, S-60XC and S-60 TraX	1
22	139741GT	HARNESS, LOAD SENSE, GBOX	1
22-	147255GT	HARNESS, JUMPER, LOAD SENSE	1
23	147646GT	HARN,GBOX & RELAY WIRES,DIESEL	1
23-	147647GT	HARN, GBOX & RELAY WIRES, FORD	1
24	T108886GT	HARN,PBOX,DUAL CAP	1
26	147031GT	HARNESS, LOAD SENSE	1
27	88801GT	BATTERY CABLE,POSITIVE,RED	1
28	88802GT	BATTERY CABLE,NEGATIVE,BLACK	1
29	T106600GT	HARN,ANGLE,SNSR.CONN. CABLE	1
30	T108322GT	HARN, LS OP PRI.DUAL CAP	1
31	T106741GT	HARN,LS,SAFETY,PRI,VELOCITY	1
32	94980GT	SENSOR,DUAL OUTPUT,ANGLE***	1
33	T107130GT	HARNESS,GBOX,DUAL CAP RELAY	1
34	T108416GT	HARNESS,DRIVE/LIFT INTERLOCK	1

307.1 Wire Harness Diagram, S-60

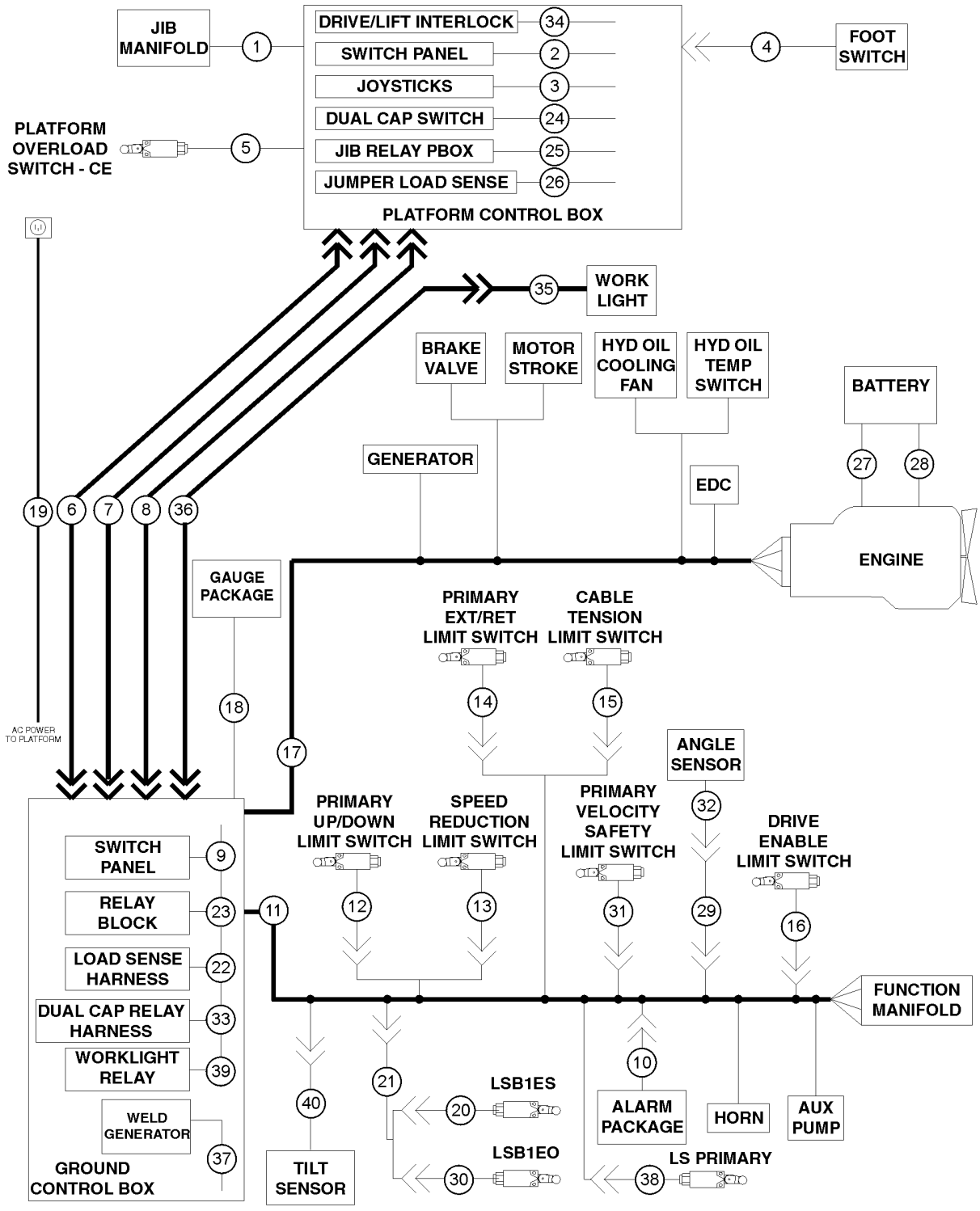

Item	*Part No.*	*Description*	*Qty.*
35	T114627GT	HARNESS,12V WORK LIGHTS	1
36A	T114625GT	CABLE,S60 12VDC WORK LIGHT S-60	1
37	147396GT	HARNESS,GENERATOR POWER	1
38	T106741GT	HARN,LS,SAFETY,PRI,VELOCITY	1
39	T114624GT	HARN,12V WORK LIGHT RELAY	1
40	1260218GT	HARNESS,TILT ALARM,12V CSA only	1
40	1264947GT	KIT, LEVEL SENSOR, 6 PIN CONN For ANSI/CSA models with 6-pin wire harness connector, includes instructions	

307.2 Wire Harness Diagram, S-65

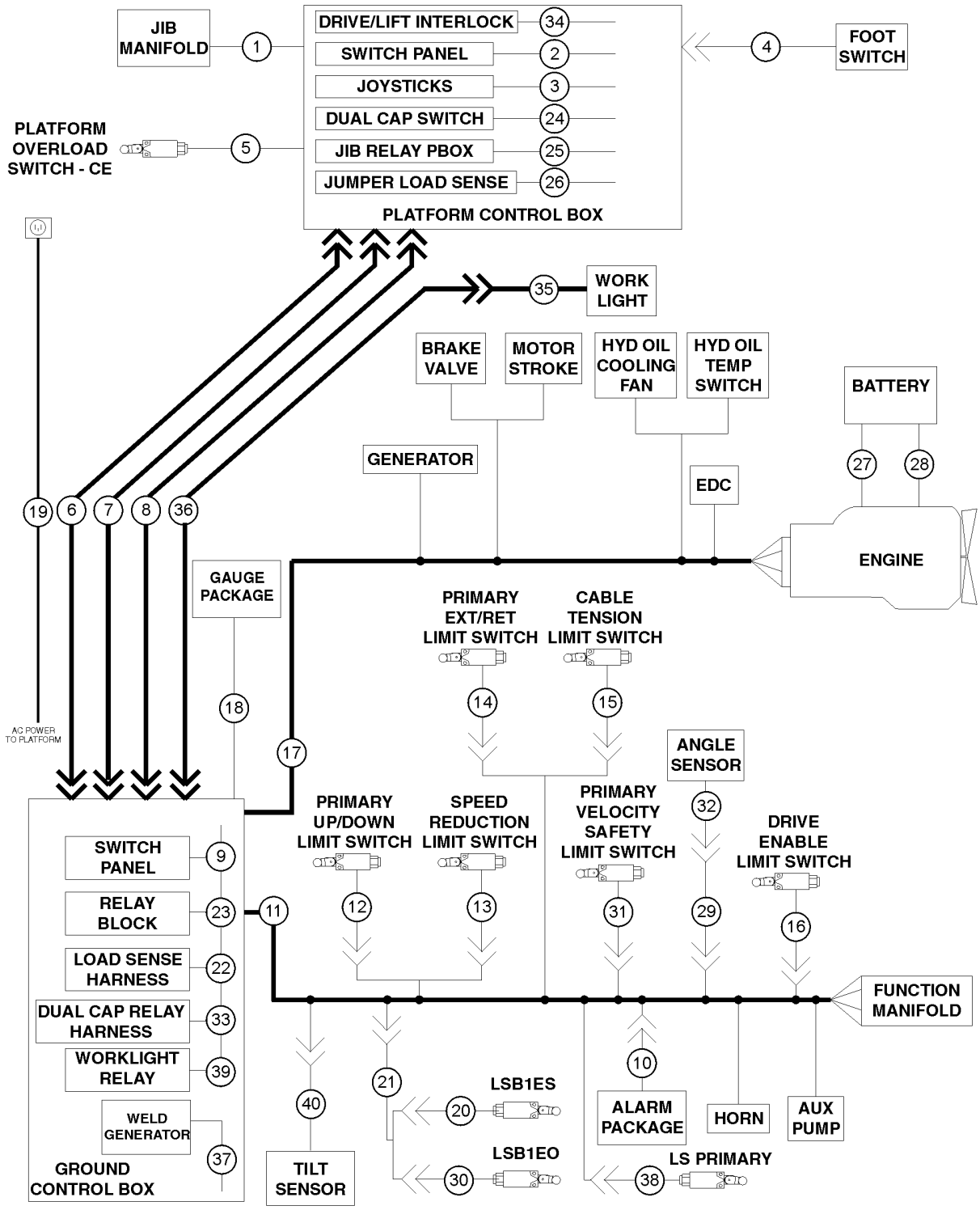

Item	Part No.	Description	Qty.
1	101080GT	HARNESS,JIB SELECT MANIFOLD S-65	1
-	101191GT	WIRE LOOM,1"DIA.SLIT,HI TEMP	
-	49219GT	SLEEVE,NYLON,2.19 ID,BULK near platform; 48 inches required	
G	1264822GT	KIT, TRC RETROFIT, STNDRD Telematics (includes 1264834)	
G-	1264834GT	INSTRN, TRC RETROFIT, STNDRD	
2	147642GT	HARNESS,PBOX,S60/65	1
3	147643GT	HARN,PBOX,JOYSTICK,S60/65	1
4		REF: Foot Switch Assembly (refer to 701.1)	
5	121848GT	ASSY,LS,LOAD SENSE,38.5 IN	1
6A	139737GT	HARNESS, 18/22, CABLE JIB S-65 (Green, Brown plugs)	1
7A	139735GT	HARNESS, 18/19, CABLE JIB S-65, to SN 26286 (Grey, Black plugs)	1
7B	823917GT	HARNESS,18/22,CABLE2 JIB S-65, from SN 26287 (Black, Grey plugs)	1
8A	139733GT	HARNESS, 12/3 12V TO PLAT JIB S-65	1
9	147652GT	HARNESS,GBOX WIRING	1
10	147300GT	HARNESS, ALARM PACKAGE	1
11	147650GT	HARN,FUNCT MANIFOLD,S60/65	1
12	139832GT	HARNESS, LS, OP, PRI ANGLE	1
13	139835GT	HARNESS, LS, OP, PRI, VELOCITY	1
14	139836GT	HARNESS, LS, OP, PRIMARY	1
15	139833GT	HARNESS, LS, OP, CABLE TENSION	1
16	139834GT	HARNESS,LS,DRIVE ENABLE	1
17	88810GT	HARNESS,DEUTZ ENGINE	1
17-	110268GT	HARNESS PERKINS ENGINE S60 ALT	1
17-	119777GT	HARNESS,FORD DSG423,S60	1
17-	119483GT	FUEL JUMPER HARNESS Ford models; from SN 19677	1
17-	147428GT	HARNESS, FORD STARTER Ford models; from SN 21009	1
17-	122053GT	HARNESS,S60 TURBO DEUTZ SPEC	1
18	107552GT	HARNESS,GAUGE OPT.,S60 DEUTZ	1

307.2 Wire Harness Diagram, S-65

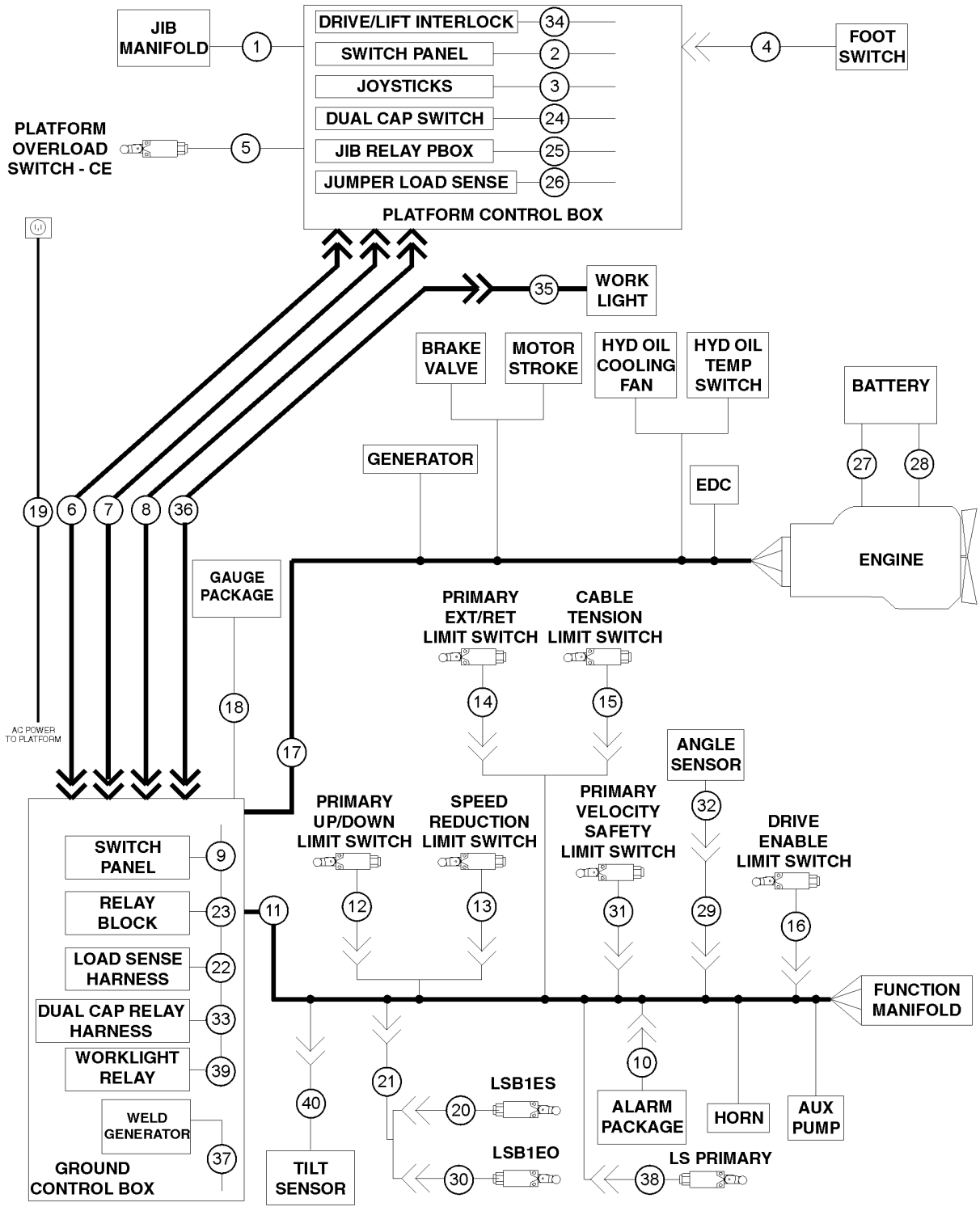

Item	Part No.	Description	Qty.
18-	T108415GT	HARNESS,ENGINE GAUGE	1
19A	139731GT	HARNESS,AC POWER TO PLAT JIB (S-65)	1
19A-	228323GT	ASSY,CABLE,12.5KW WELDER (S-65 Welder Option)	936 inches
20	T108321GT	HARN,LS SAFETY,PRI.DUAL CAP	1
21	147654GT	HARN,LS CABLE,S60 DUAL CAP	1
22	139741GT	HARNESS, LOAD SENSE, GBOX	1
22-	147255GT	HARNESS, JUMPER, LOAD SENSE	1
23	147646GT	HARN,GBOX & RELAY WIRES,DIESEL	1
23-	147647GT	HARN, GBOX & RELAY WIRES, FORD	1
24	T108886GT	HARN,PBOX,DUAL CAP	1
25	147657GT	HARNESS,JIB,PBOX,S65	1
25-	43181GT	CAPACITOR,TIME DELAY for 147657	1
25-	56445GT	DIODE,6 AMP 200 PIV,REEL for 147657	1
26	147031GT	HARNESS, LOAD SENSE	1
27	88801GT	BATTERY CABLE,POSITIVE,RED	1
28	88802GT	BATTERY CABLE,NEGATIVE,BLACK	1
29	T106600GT	HARN,ANGLE,SNSR.CONN. CABLE	1
30	T108322GT	HARN, LS OP PRI.DUAL CAP	1
31	T106741GT	HARN,LS,SAFETY,PRI,VELOCITY	1
32	94980GT	SENSOR,DUAL OUTPUT,ANGLE***	1
33	T107130GT	HARNESS,GBOX,DUAL CAP RELAY	1
34	T108416GT	HARNESS,DRIVE/LIFT INTERLOCK	1
35	T114627GT	HARNESS,12V WORK LIGHTS	1
36B	T114626GT	CABLE,S65 12VDC WORK LIGHT S-65	1
37	147396GT	HARNESS,GENERATOR POWER	1
38	T106741GT	HARN,LS,SAFETY,PRI,VELOCITY	1
39	T114624GT	HARN,12V WORK LIGHT RELAY	1

308.1 S-60 HC Turntable - View 1

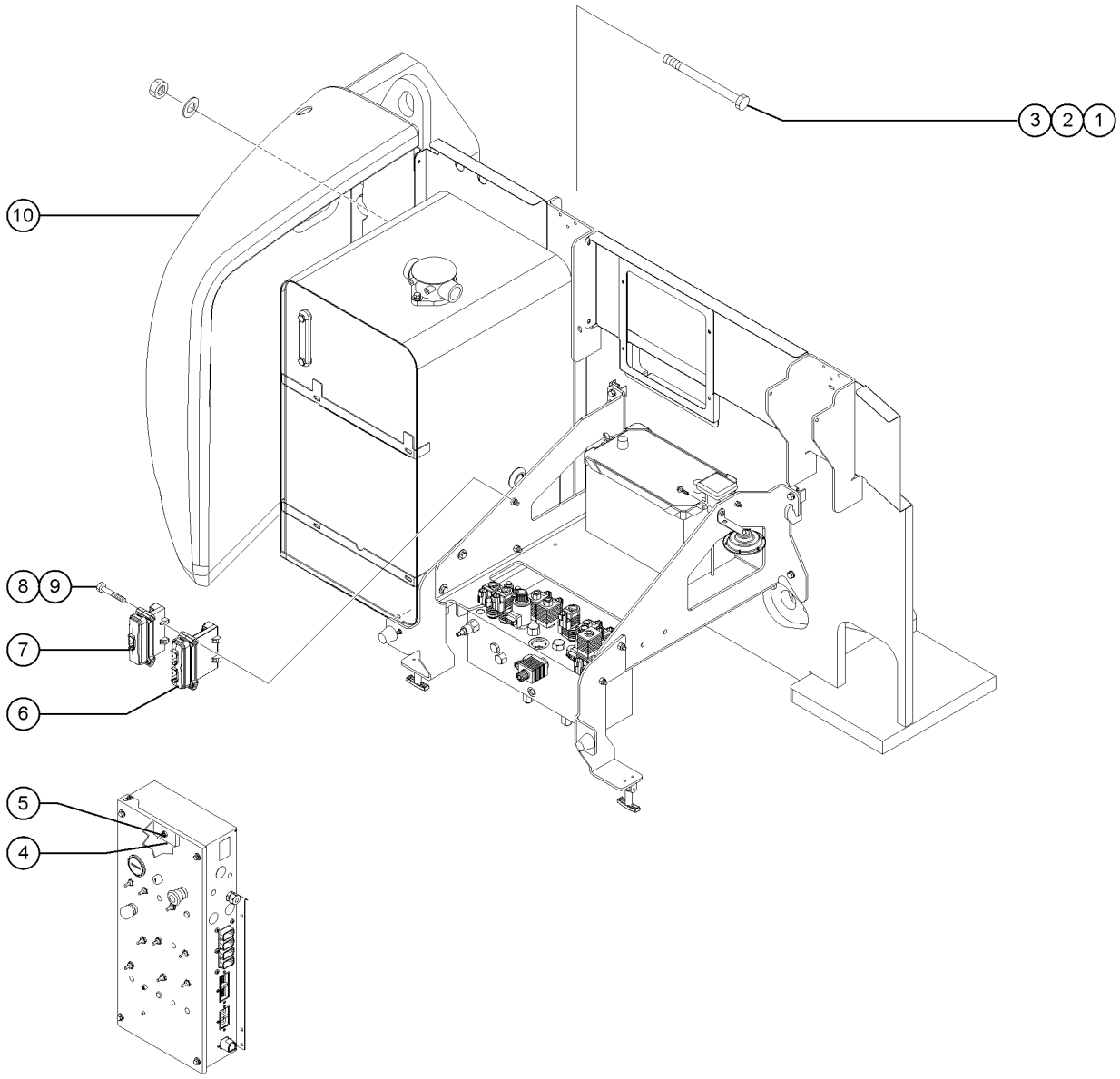

308.1 S-60 HC Turntable - View 1

Item	Part No.	Description	Qty.
1	73928GT	SCREW,HHC,1-8 X 11,GRD 5***	1
2	38859GT	WASHER,FLAT,USS,1",Y	
3	29764GT	NUT,NYLOCK,1-8	
4		FORMING,CAL TOGGLE SWITCH no longer available	1
5	13480-SGT	SWITCH,TOGGLE,DPDT,2POS MOMEN	1
6	110991GT	CONTROLLER ASSY TCON S60HC	1
7	110992GT	CONTROLLER ASSY SCON S60HC	1
8	74254GT	SCREW,HHC,1/4-20 X 4.5	
9	6091GT	NUT,NYLOCK,1/4-20	
10	88889GT	COUNTERWEIGHT,S60/65 5500LBS** S-60X, S-60 and-S60 TraX with 750 lb capacity; S-65 & S-65 TraX	1

309.1 S-60 HC Turntable - View 2

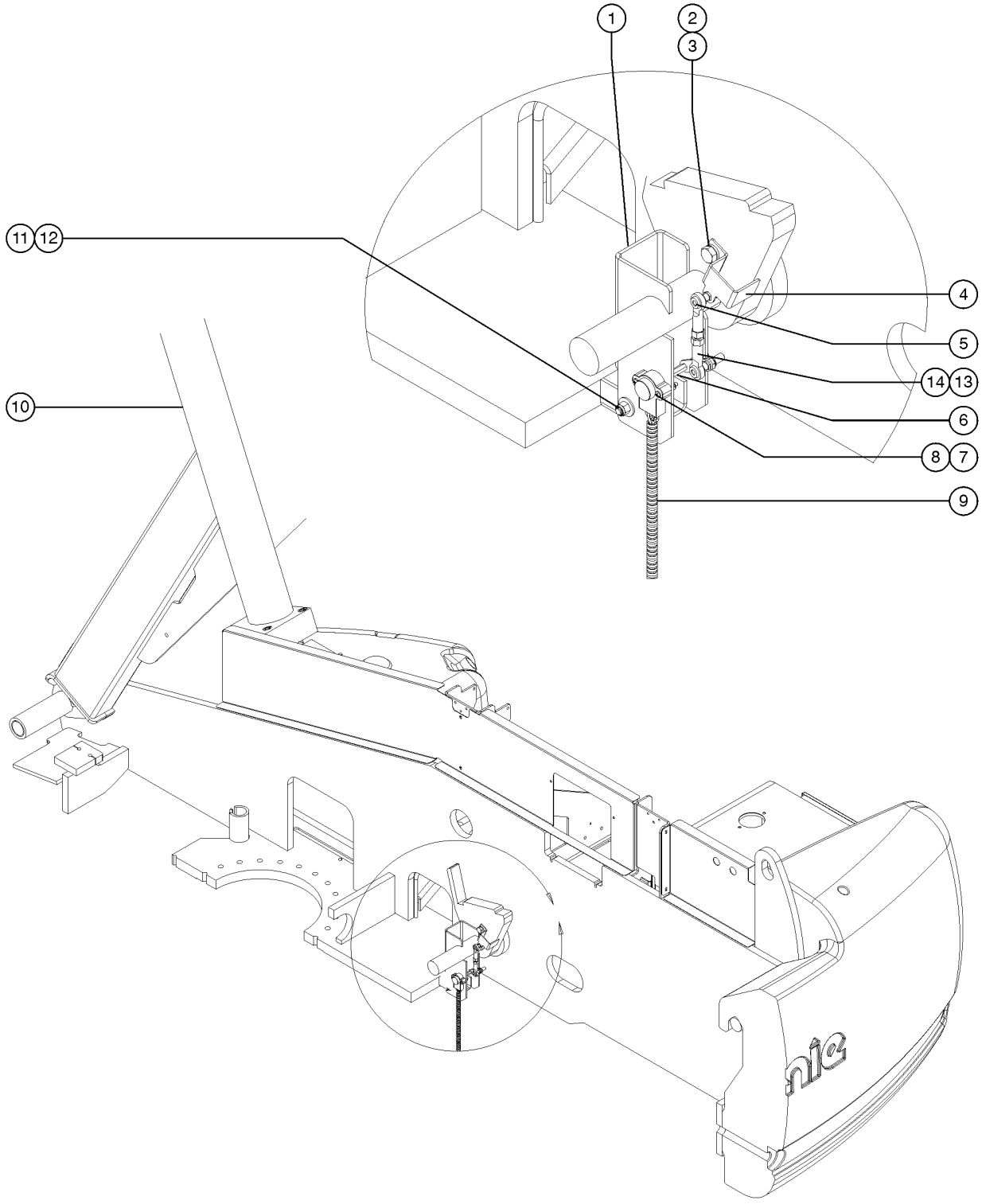

309.1 S-60 HC Turntable - View 2

Item	Part No.	Description	Qty.
1	106883PGT	FORMING,SENSOR BRACKET(PTD)	1
2	10597GT	SCREW,HHC,1/2-13 X 1.25 GR5	1
3	6033GT	WASHER,LOCK,0.5"	1
4	119044GT	FORMING,ANGLE LINKAGE BRACKET	1
5	110329GT	BALL JOINT, 3/8-24 FEMALE qty (1)	1
5-	110755GT	NUT,HEX,JAM,3/8-24	
5-	5408GT	NUT,LP NYLOCK,3/8-24	
6	106884GT	WELDMENT, ROTATOR ARM	1
7	6179GT	SCREW,RHM,10-32 X 1.25	2
8	6178GT	NUT, NYLOCK, 10-32	2
9	94980GT	SENSOR,DUAL OUTPUT,ANGLE*** (calibration required after replacement)	1
9-	60445GT	LOCK,RECEP 6 WAY,14-18GA	
9-	60455GT	TERM,GOLD PIN,18-16GA REEL	
9-	119068GT	CONN,RECEP 6 WAY ENDCAP DT	
9-	20973-1700GT	WIRE LOOM,3/8 POLY SLIT	
10	107825GT	CYLINDER, LIFT, S60HC	1
10-	101252GT	SEAL KIT (88653)	
10-	128464GT	VALVE,COUNTERBAL,CWCK-LHN@3500	
10-	60984GT	VALVE COUNTERBAL.CBBD-LJN@5000	
10-	1262331GT	KIT, GLAND NUT, S60 LIFT CYL. for 107825	
11	6175GT	SCREW,HHC,3/8-16 X 1	2
12	4828GT	NUT, NYLOCK, 3/8-16	2
13	139440GT	BALL JOINT, 3/8-24 LEFT HAND	1
13-	139441GT	NUT,HEX,JAM,3/8-24, LEFT HAND	
13-	5408GT	NUT,LP NYLOCK,3/8-24	
14	139366GT	ADJ ROD, LH/RH, 3/8-24	1

401.1 Function Manifold

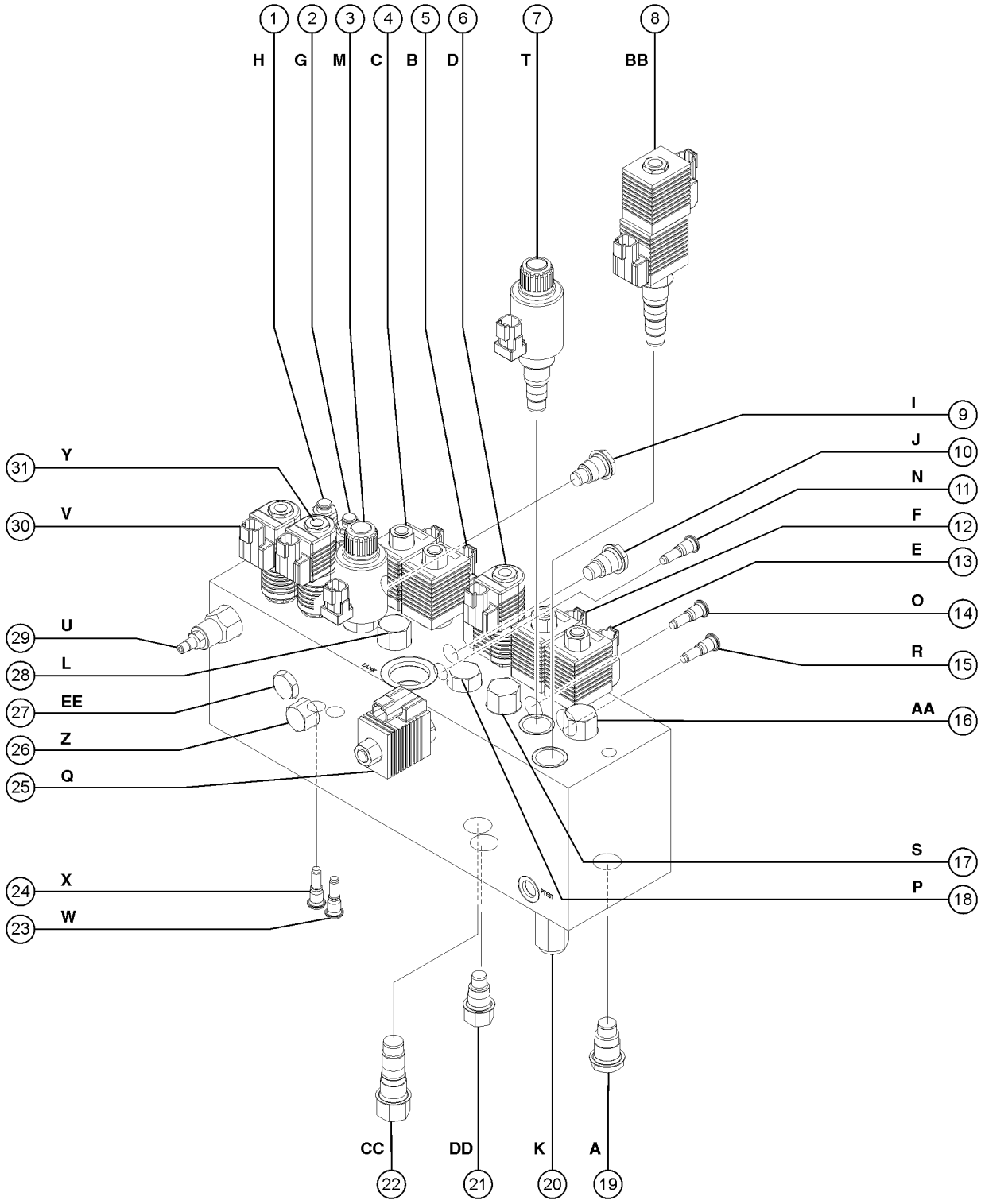

401.1 Function Manifold

Item	Part No.	Description	Qty.
A-	139963GT	MANIFOLD,FUNCTION	
B-	94499GT	ACCUMULATOR,10CC,1000PSI,#6SAE (not shown)	
1	62256GT	VALVE,CB 3:1 3500 PSI Platform level down	1
1-	110202GT	SEAL KIT, VALVE, #10	
2	62256GT	VALVE,CB 3:1 3500 PSI Platform level up	1
2-	110202GT	SEAL KIT, VALVE, #10	
3	107753GT	VALVE,PROPORTIONAL Boom extend/retract	1
3-	89310GT	SEAL KIT, SOLENOID VALVE	
3-	58303GT	COIL,VALVE,PROPORTIONAL***	
3-	45921GT	RETAINER-N.C.PROPOR.SOLENOID	
4	89309GT	VALVE - SOLENOID 2POSITION 3WA Boom retract	1
4-	45912GT	NUT,SOLENOID VALVE 2P3W	
4-	62275GT	COIL,10V	
4-	89310GT	SEAL KIT, SOLENOID VALVE	
5	89309GT	VALVE - SOLENOID 2POSITION 3WA Boom extend	1
5-	45912GT	NUT,SOLENOID VALVE 2P3W	
5-	62275GT	COIL,10V	
5-	89310GT	SEAL KIT, SOLENOID VALVE	
6	89307GT	VALVE,SOLENOID 3POS 4WAY* Turntable rotate	1
6-	52943GT	NUT, SOLENOID VALVE COIL	
6-	62273GT	COIL,GREEN W/ 2 PIN CONNECTOR*	
6-	72047GT	SEAL KIT, SOLENOID VALVE	
6-	89311GT	SPACER, DUAL COIL SIZE #8	
7	107753GT	VALVE,PROPORTIONAL Boom up/down circuit	
7-	89310GT	SEAL KIT, SOLENOID VALVE	
7-	58303GT	COIL,VALVE,PROPORTIONAL***	
7-	45921GT	RETAINER-N.C.PROPOR.SOLENOID	
8	62260GT	VALVE,SOLENOID 3 POS,4WAY*** Steer left/right	1

401.1 Function Manifold

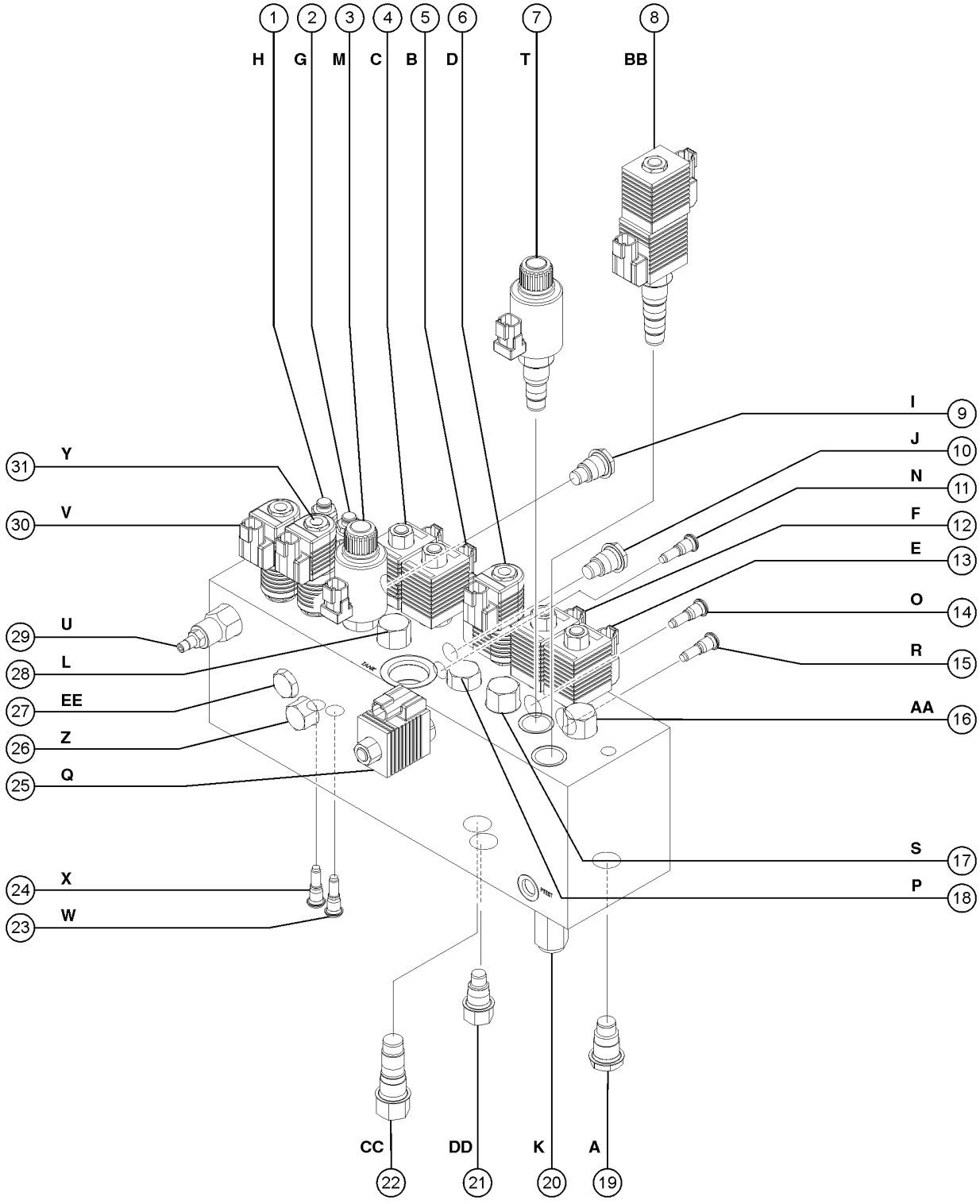

Item	Part No.	Description	Qty.
8-	110196GT	SEAL KIT, VALVE, #10	
8-	52943GT	NUT, SOLENOID VALVE COIL	
8-	89861GT	COIL, 10V DC (D10, 20 WATT)	
9	62257GT	VALVE,CHECK, 30 PSI Differential sensing circuit, platform rotate left and jib boom up (S-65, S-65 Trax)	1
9-	74902GT	SEAL KIT, VALVE	
10	62257GT	VALVE,CHECK, 30 PSI Differential sensing circuit, platform rotate right and jib boom down (S-65, S-65 Trax)	1
10-	74902GT	SEAL KIT, VALVE	
11	27807GT	VALVE,CHECK*** Differential sensing circuit, boom extend/retract	1
11-	110200GT	SEAL KIT, VALVE, #4	
12	89309GT	VALVE - SOLENOID 2POSITION 3WA Boom down	1
12-	45912GT	NUT,SOLENOID VALVE 2P3W	
12-	62275GT	COIL,10V	
12-	89310GT	SEAL KIT, SOLENOID VALVE	
13	89309GT	VALVE - SOLENOID 2POSITION 3WA Boom up/down circuit	1
13-	45912GT	NUT,SOLENOID VALVE 2P3W	
13-	62275GT	COIL,10V	
13-	89310GT	SEAL KIT, SOLENOID VALVE	
14	27807GT	VALVE,CHECK*** Differential sensing circuit, turntable rotate	1
14-	110200GT	SEAL KIT, VALVE, #4	
15	27807GT	VALVE,CHECK*** Differential sensing circuit, boom up/down	1
15-	110200GT	SEAL KIT, VALVE, #4	
16	111705GT	VALVE,FLOW REGULATOR 3.5 GPM** Steer left/right circuit	1
16-	110202GT	SEAL KIT, VALVE, #10	
17	94599GT	VALVE,DIFFERENTIAL SENSING,110 Boom up/down circuit	1
17-	110197GT	SEAL KIT, VALVE, #10	
18	27802GT	VALVE,DIFFERENTIAL SENSING*** Turntable rotate circuit	1
18-	110197GT	SEAL KIT, VALVE, #10	
19	27836GT	VALVE,CHECK,5 PSI Blocks flow from auxiliary pump to function pump	1

401.1 Function Manifold

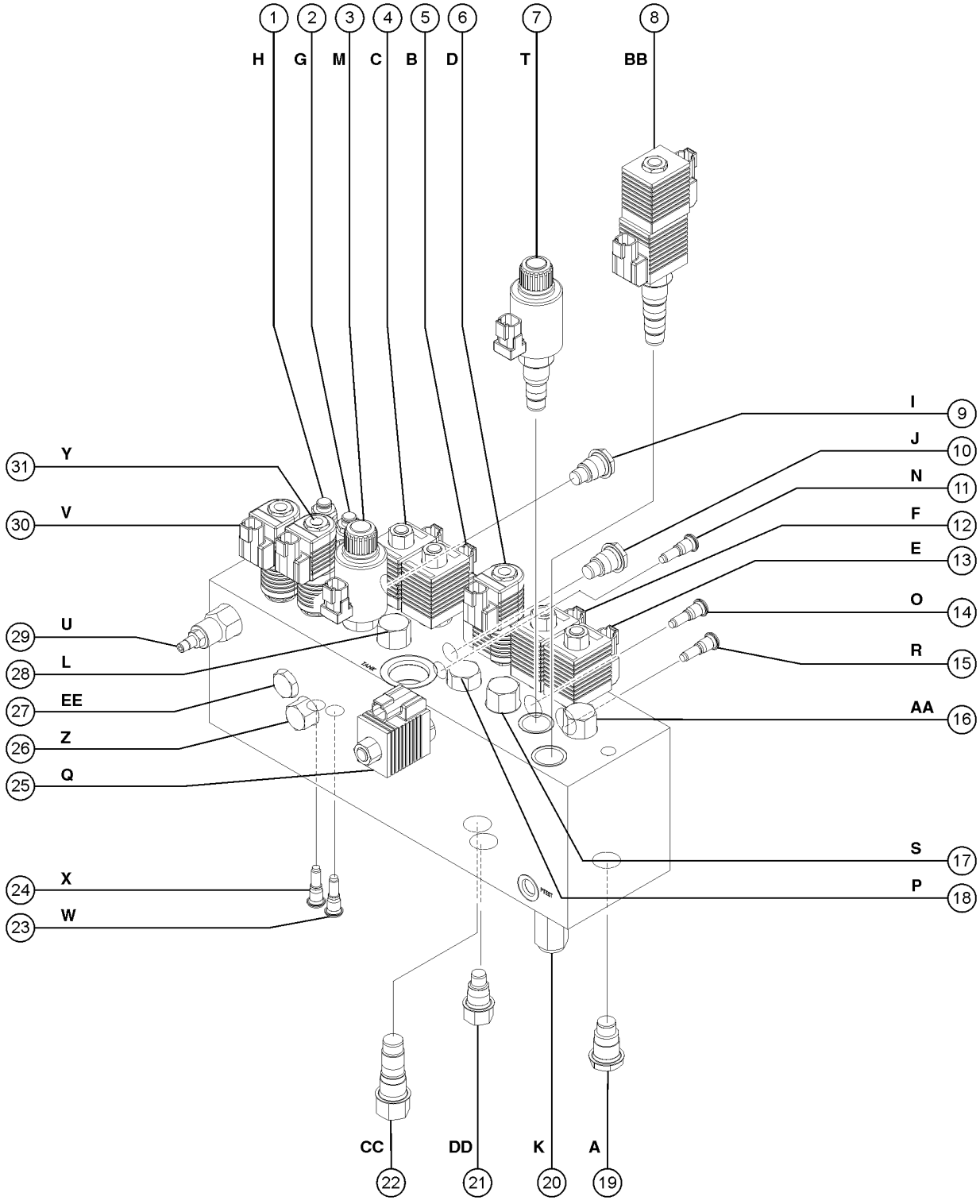

Item	Part No.	Description	Qty.
19-	110194GT	SEAL KIT, VALVE, #10	
20	45489GT	VALVE,RELIEF 3000 PSI*** System relief	1
20-	110194GT	SEAL KIT, VALVE, #10	
21	32975GT	VALVE,FLOW REGULATOR 0.1 GPM Bleeds off differential sensing valves to tank	1
21-	74902GT	SEAL KIT, VALVE	
22	27804GT	VALVE,DIFFERENTIAL SENSING*** Differential sensing circuit, meters flow to functions	1
22-	110201GT	SEAL KIT, VALVE, #10	
23	27807GT	VALVE,CHECK*** Differential sensing circuit, platform level up	1
23-	110200GT	SEAL KIT, VALVE, #4	
24	27807GT	VALVE,CHECK*** Differential sensing circuit, platform level down	1
24-	110200GT	SEAL KIT, VALVE, #4	
25	94598GT	VALVE,PROPORTIONAL*** Turntable rotate left/right	1
25-	62274GT	COIL,12V	
25-	62276GT	NUT, SOLENOID VALVE COIL	
25-	89736GT	SEAL KIT, PROPORTIONAL VALVE	
26	31100GT	VALVE,FLOW REGULATOR 0.6GPM Platform rotate and jib boom (S-65, S-65 TraX)	1
26-	74902GT	SEAL KIT, VALVE	
27	62257GT	VALVE,CHECK, 30 PSI Platform rotate and jib boom circuit (S-65, S-65 TraX) (prevents hydraulic hoses from draining back to tank)	1
27-	74902GT	SEAL KIT, VALVE	
28	94599GT	VALVE,DIFFERENTIAL SENSING,110 Boom extend/retact circuit	1
28-	110197GT	SEAL KIT, VALVE, #10	
29	62258GT	VALVE,NEEDLE*** Platform level circuit	1
29-	110194GT	SEAL KIT, VALVE, #10	
30	89307GT	VALVE,SOLENOID 3POS 4WAY* Platform level up/down	1
30-	52943GT	NUT, SOLENOID VALVE COIL	
30-	62273GT	COIL,GREEN W/ 2 PIN CONNECTOR*	
30-	72047GT	SEAL KIT, SOLENOID VALVE	
30-	89311GT	SPACER, DUAL COIL SIZE #8	

401.1 Function Manifold

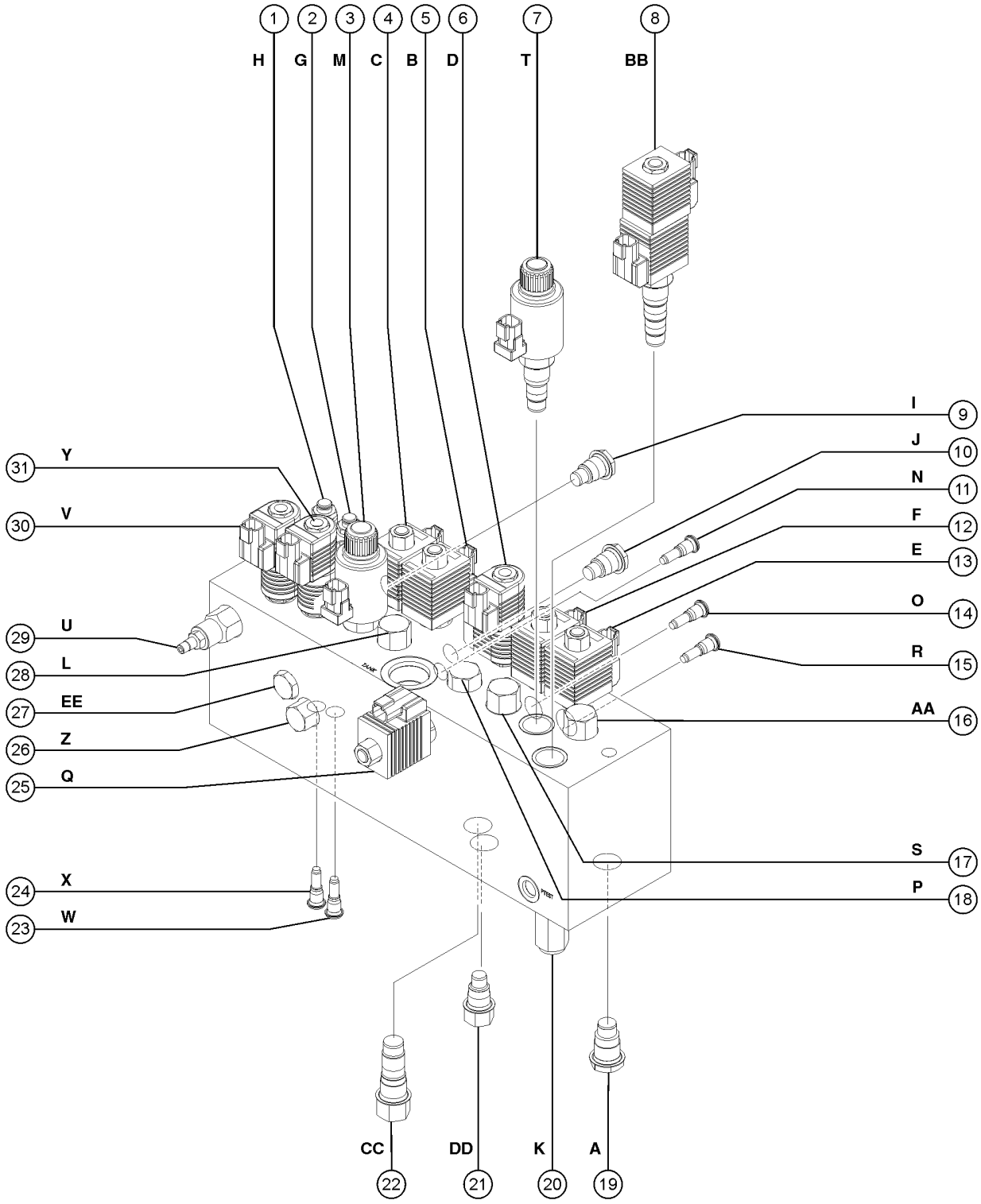

Item	*Part No.*	*Description*	*Qty.*
31	89307GT	VALVE,SOLENOID 3POS 4WAY* ..... Platform rotate and jib boom up/down (S-65, S-65 TraX)	1
31-	52943GT	NUT, SOLENOID VALVE COIL	
31-	62273GT	COIL,GREEN W/ 2 PIN CONNECTOR*	
31-	72047GT	SEAL KIT, SOLENOID VALVE	
31-	89311GT	SPACER, DUAL COIL SIZE #8	

402.1 Traction Manifold, 2WD

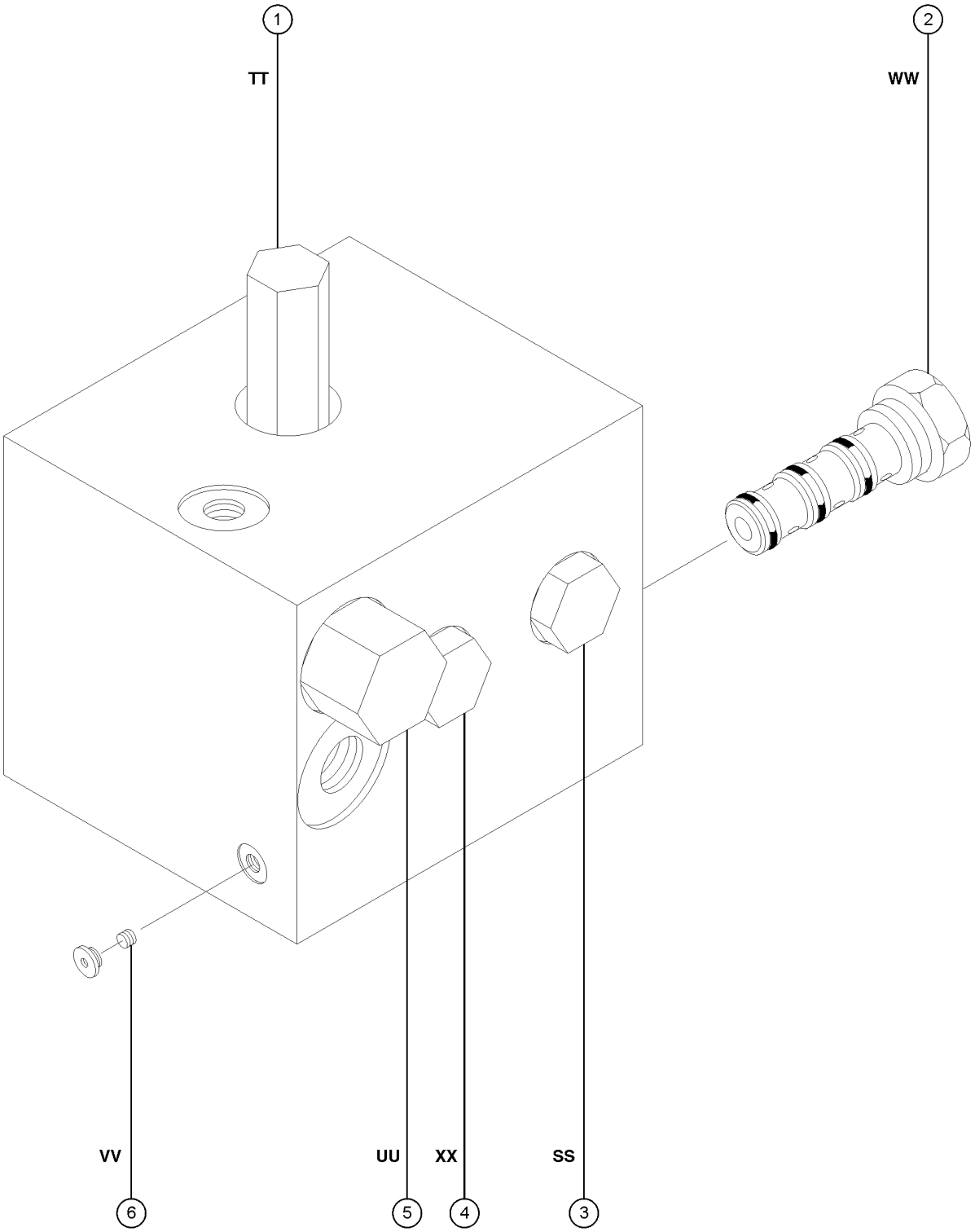

402.1 Traction Manifold, 2WD

Item	Part No.	Description	Qty.
A-	88783GT	MANIFOLD,TRACTION,2WD	
1	94758GT	VALVE,RELIEF,280PSI Charge Pressure circuit	1
1-	110194GT	SEAL KIT, VALVE, #10	
2	52726GT	VALVE,FLOW DIVIDER/COMBINER Controls flow to drive motors in forward and reverse	1
2-	84135GT	SEAL KIT, VALVE	
3	27836GT	VALVE,CHECK,5 PSI Drive circuit	1
3-	110194GT	SEAL KIT, VALVE, #10	
4	27836GT	VALVE,CHECK,5 PSI Drive circuit	1
4-	110194GT	SEAL KIT, VALVE, #10	
5	27761GT	VALVE,SHUTTLE Charge Pressure circuit that directs hot oil out of low pressure side of drive pump	1
5-	84134GT	SEAL KIT, VALVE	
6	101440GT	ORIFICE PLUG, 0.070" Drive motor circuit	1

403.1 Traction Manifold, 4WD (to serial number 21231)

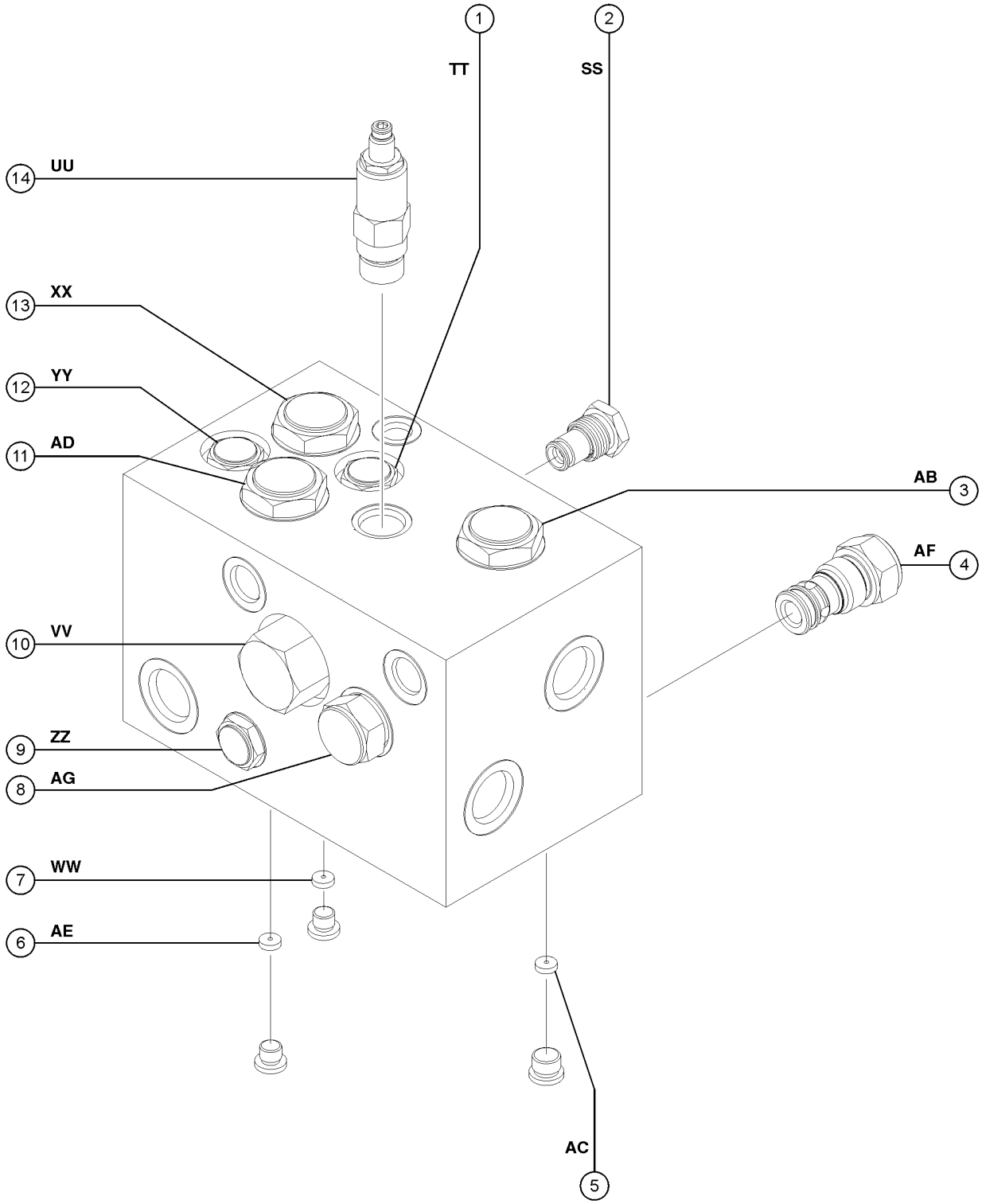

403.1 Traction Manifold, 4WD (to serial number 21231)

Item	Part No.	Description	Qty.
A-		Ref. MANIFOLD,TRACTION,4WD*** ..... 4WD traction manifold part 88784 is no longer available; for its complete replacement customer must order part 139712. (refer to 403.2)	
1	94757GT	VALVE,CHECK,3 PSI*** ..... Steer End Drive motor circuit (88784)	1
1-	128416GT	SEAL KIT	
2	94757GT	VALVE,CHECK,3 PSI*** ..... Non-steer End Drive motor circuit (88784)	1
2-	128416GT	SEAL KIT	
3	94754GT	VALVE,FLOW DIVIDER/COMBINER ..... Controls flow to flow divider/combiner valves (88784)	1
3-	128417GT	SEAL KIT	
4	94756GT	VALVE,CHECK, 2.5 PSI ..... Non-steer End Drive motor circuit (88784)	1
4-	128418GT	SEAL KIT	
5	94751GT	ORIFICE,0.040" ..... Equalizes pressure on both sides of flow divider/combiner valve 3	1
6	94751GT	ORIFICE,0.040" ..... Equalizes pressure on both sides of flow divider/combiner valve 11	1
7	94751GT	ORIFICE,0.040" ..... Steer End Drive motor circuit (88784)	1
8	94756GT	VALVE,CHECK, 2.5 PSI ..... Steer End Drive motor circuit (88784)	1
8-	128418GT	SEAL KIT	
9	94757GT	VALVE,CHECK,3 PSI*** ..... Steer End Drive motor circuit (88784)	1
9-	128416GT	SEAL KIT	
10	94753GT	VALVE,SHUTTLE,40 PSI .. Charge pressure circuit that directs hot oil out of low pressure side of drive pump (88784)	1
10-	128417GT	SEAL KIT	
11	94752GT	VALVE FLOW DIVIDER/COMBINER ..... Controls flow to steer end drive motors in forward and reverse (88784)	1
11-	128417GT	SEAL KIT	
12	94757GT	VALVE,CHECK,3 PSI*** ..... Non-steer End Drive motor circuit (88784)	1
12-	128416GT	SEAL KIT	
13	94752GT	VALVE FLOW DIVIDER/COMBINER ..... Controls flow to steer end drive motors in forward and reverse (88784)	1
13-	128417GT	SEAL KIT	
14	101446GT	VALVE,RELIEF 280 PSI ..... Charge pressure circuit (88784)	1
14-	128416GT	SEAL KIT	

403.2 Traction Manifold, 4WD (from serial number 21232)

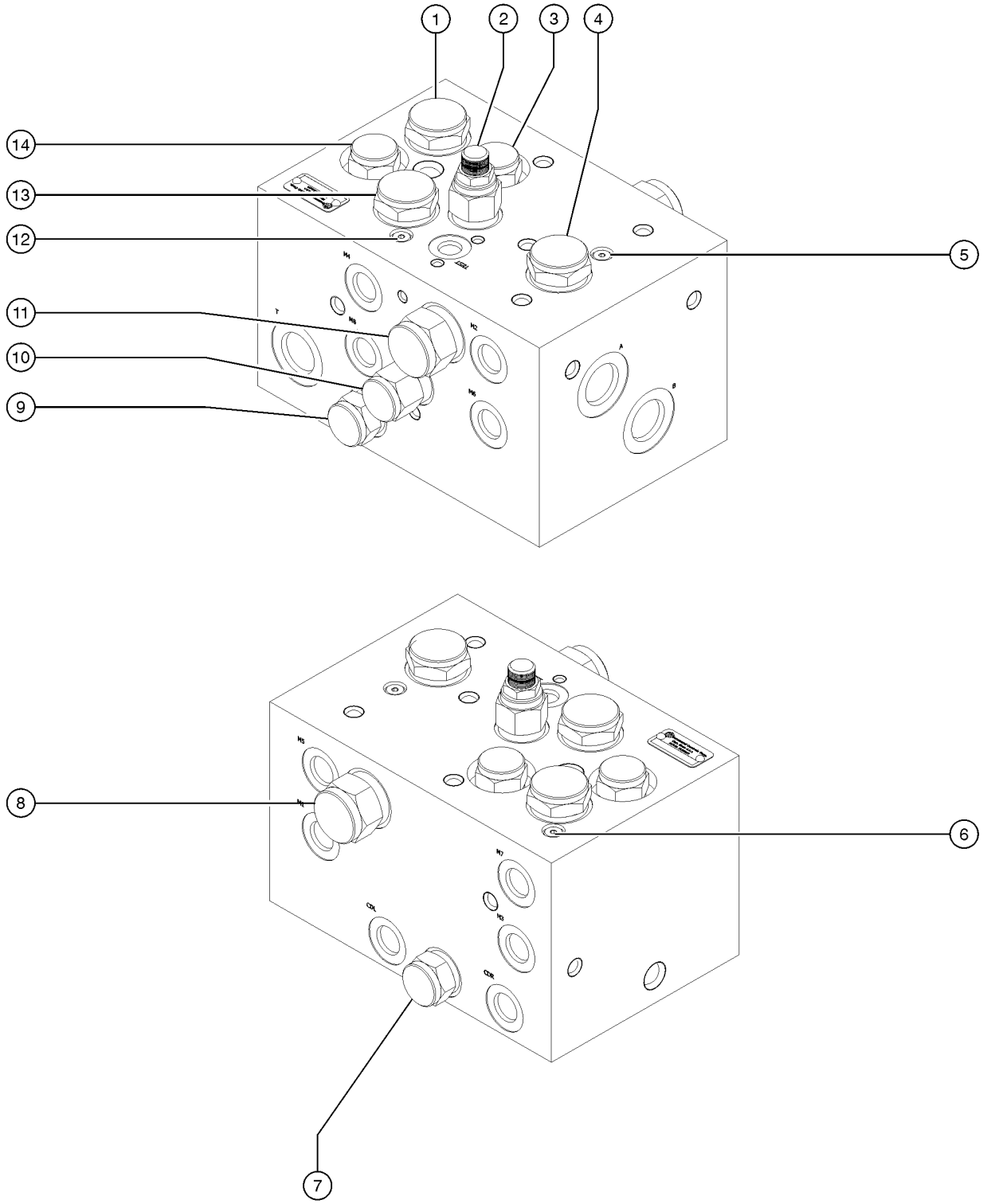

403.2 Traction Manifold, 4WD (from serial number 21232)

Item	Part No.	Description	Qty.
	139712GT	MANIFOLD,TRACTION,4WD*** (replaced 88784 at SN 21232)	
1	139717GT	VALVE, FLOW DIVIDE/COMB,24GPM (controls flow to non-steer end drive motors in forward and reverse)	1
1-	139512GT	SEAL KIT, VALVE	
2	139718GT	VALVE, RELIEF, 280PSI (charge pressure circuit)	1
2-	139528GT	SEAL KIT, VALVE	
3	139527GT	VALVE, CHECK, 5PSI (steer end drive motor circuit)	1
4	139508GT	VALVE, FLOW DIVIDE/COMBINE 1:1 (controls flow to flow divider/combiner valves 1 and 13)	1
5	139719GT	ORIFICE, 0.040" (equalizes pressure on both sides of flow divider/combiner valve)	1
5-	1287434GT	PLUG,SAE #03 (139712)	
6	139719GT	ORIFICE, 0.040" (equalizes pressure on both sides of flow divider/combiner valve)	1
6-	1287434GT	PLUG,SAE #03 (139712)	
7	139527GT	VALVE, CHECK, 5PSI (non-steer end drive motor circuit)	1
8	139716GT	VALVE, CHECK (non-steer end drive motor circuit)	1
8-	139727GT	SEAL KIT, VALVE	
9	139527GT	VALVE, CHECK, 5PSI (steer end drive motor circuit)	1
10	139715GT	VALVE, SHUTTLE, FIXED (steer end drive motor circuit)	1
10-	139512GT	SEAL KIT, VALVE	
11	139716GT	VALVE, CHECK (charge pressure circuit that directs hot oil out of low pressure side of drive pump)	1
12	139719GT	ORIFICE, 0.040" (equalizes pressure on both sides of flow divider/combiner valve)	1
12-	1287434GT	PLUG,SAE #03 (139712)	
13	139717GT	VALVE, FLOW DIVIDE/COMB,24GPM (controls flow to steer end drive motors in forward and reverse)	1
13-	139512GT	SEAL KIT, VALVE	
14	139527GT	VALVE, CHECK, 5PSI (non-steer end drive motor circuit)	1

404.1 Platform Rotate and Jib Boom/Platform Rotate Manifold

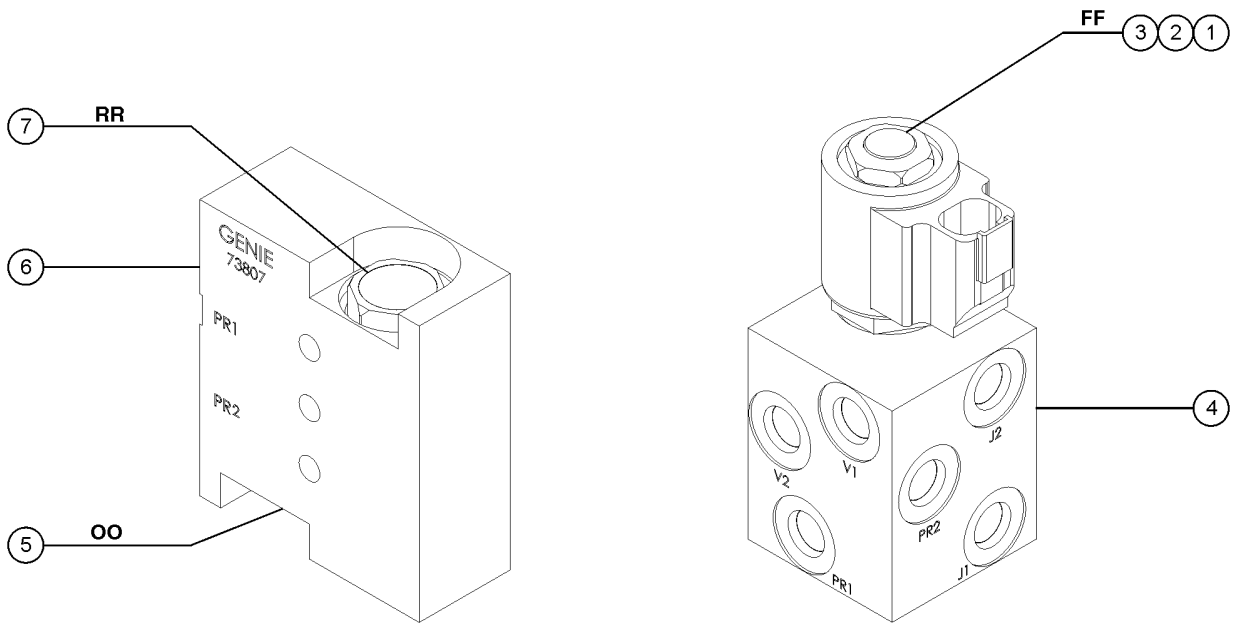

Item	*Part No.*	*Description*	*Qty.*
1	44174GT	NUT-COIL SHORT	1
2	52897GT	VALVE,SOLENOID, 2POS/3WAY***	1
2-	52371GT	SEAL KIT, VALVE	1
3	104759GT	COIL,12VDC #8 DTSCH IP69 ECOIL	1
4A	1256670GT	MANIFOLD,JIB SELECT W/QD PLUG includes items 1-3	1
4B		MANIFOLD,JIB SELECT W/QD PLUG* (88786) replaced by 1256670	1
4B-	89862GT	VALVE-SOLENOID,2POS 3WAY,JIB** Platform rotate/Jib boom select	1
4B-	89864GT	SEAL KIT,SOLENOID VALVE, SV07 for 89862	
5	62506GT	VALVE - COUNTERBALANCE** Platform rotate left	1
5-	43018GT	SEAL KIT (39345)	
6	73807GT	MANIFOLD,ROTATOR,CB***	1
6-	62507GT	O-RING, ROTATOR MANIFOLD	
7	62506GT	VALVE - COUNTERBALANCE** Platform rotate right	1
7-	43018GT	SEAL KIT (39345)	

405.1 Pumps

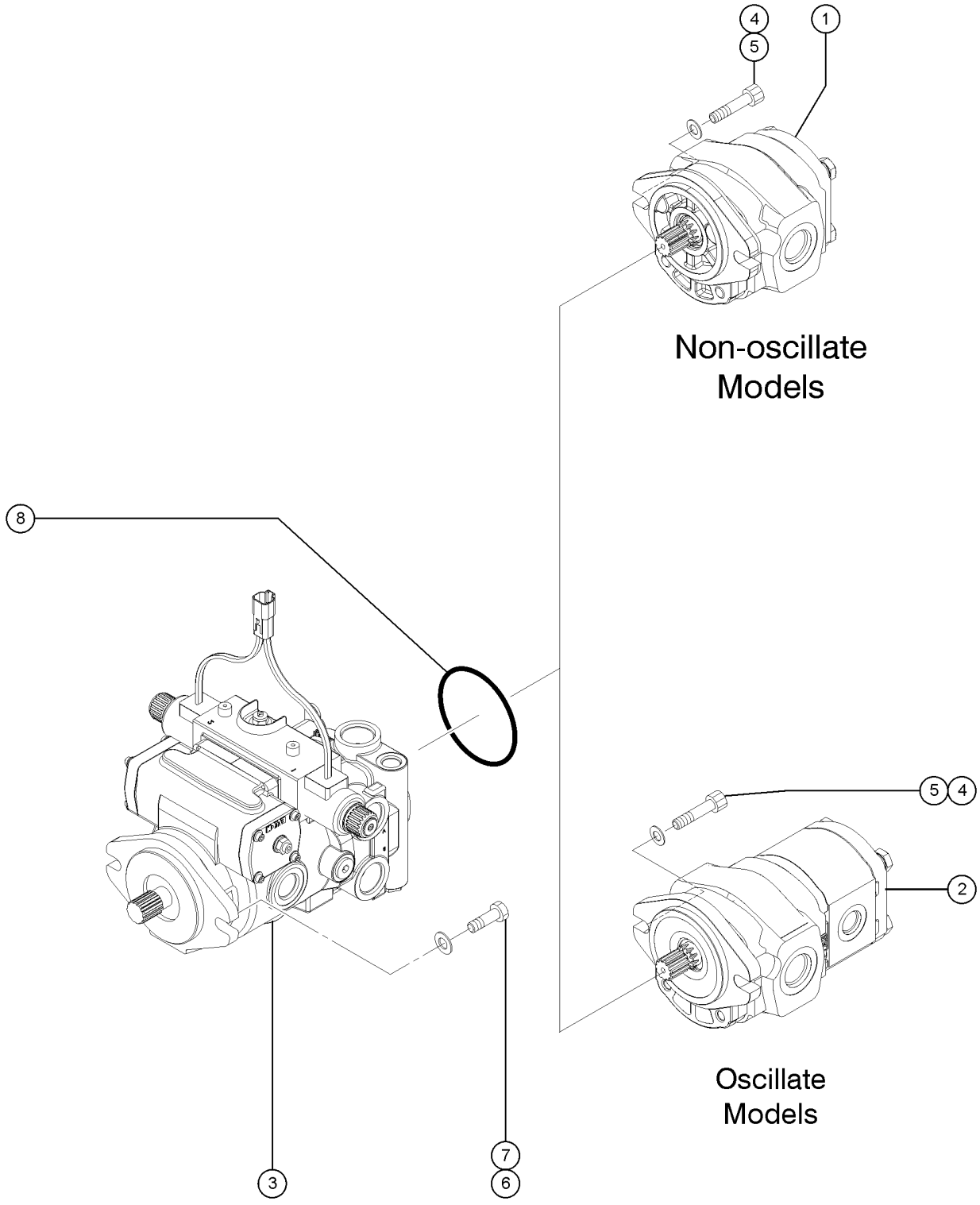

405.1 Pumps

Item	Part No.	Description	Qty.
1	139799GT	PUMP,LIFT,1 SECTION	1
1-	147550GT	KIT, SEAL, PUMP, 1 SECTION	
2	139801GT	PUMP,LIFT,2 SECTION***	1
2-	147549GT	KIT, SEAL, PUMP, 2 SECTION	
3	77788GT	PUMP,PISTON,49CC***	1
3-	43683GT	O-RING,2-042 N674-70***	
3-	58431GT	SEAL KIT,PUMP SHAFT (EATON)*** check pump date code, if after 031505, must also order 107813 qty 1	
3-	82431GT	HOSE ASM-JCAF310-06-41	
3-	1286043GT	KIT,SOLENOID REPLACEMENT,EATON (77788)	
3-	1285506GT	SEAL RING,SOLENOID CONTROL (for 1286043GT)	
3-	101294GT	KIT,CHARGE PUMP	
3-	106835GT	CONTROLLER W/O COILS (77788) (first time replacement requires 1285505GT)	
3-	106836GT	O-RING,STEM,EATON	
3-	106837GT	NUT,STEM,EATON***	
3-	107813GT	SPACER,EATON PUMP SHAFT SEAL** check pump date code, for pumps after 031505	
3-	107814GT	SEAL,SHAFT,EATON PUMP***	
3-	107815GT	SNAP RING,PUMP SHAFT SEAL***	
3-	107842GT	KIT,PUMP SHAFT SEAL W/INST*** includes PNs 107813, 107814, 107815	
3-	128423GT	KIT,CHARGE PUMP HOUSING	
3-	9990606GT	COVER PLATE GASKET (Component of 77788GT) (QTY 2 per pump)	
3-	9990607GT	WASHER SEAL(Component of 77788GT) (use on Cover Plate)	
3-	9990608GT	NUT, JAM (Component of 77788GT) (use on Cover Plate)	
4	33988GT	SCREW,SHC,3/8-16 X 1	
5	5397GT	WASHER, FLAT, USS, 5/16-18	
6	8177GT	SCREW,HHC,1/2-13 X 1.5	
7	13066GT	WASHER,FLAT,.5 HARDENED	
8	43683GT	O-RING,2-042 N674-70***	1

406.1 Brake and 2 Speed Manifold (to SN 25201)

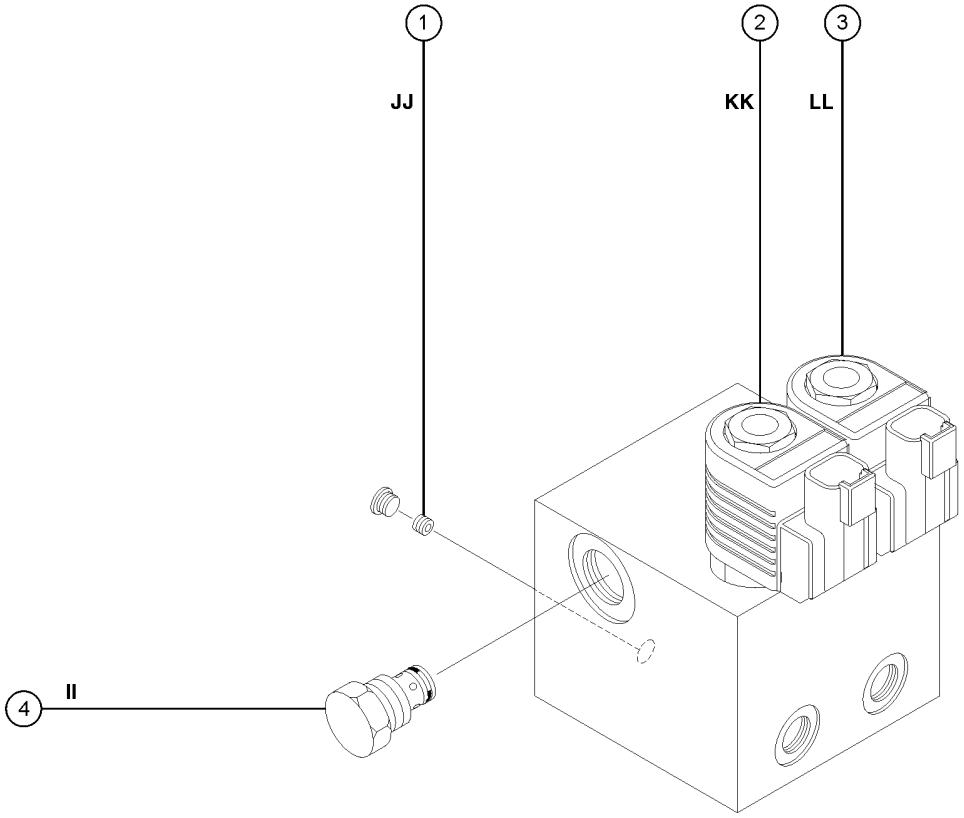

406.1 Brake and 2 Speed Manifold (to SN 25201)

Item	Part No.	Description	Qty.
A-	88785GT	MANIFOLD,BRAKE/2 SPD W/QD PLG*	
1	94764GT	ORIFICE,0.025" Turntable rotation brake release	1
2	94760GT	VALVE,SOLENOID,10V,W/OUT COIL* Brake release	1
2-	128419GT	SEAL KIT	
2-	94759GT	NUT,SOLENOID	
2-	94765GT	COIL-10V DC***	
3	94760GT	VALVE,SOLENOID,10V,W/OUT COIL* Two-speed motor shift	1
3-	128419GT	SEAL KIT	
3-	94759GT	NUT,SOLENOID	
3-	94765GT	COIL-10V DC***	
4	94761GT	VALVE,CHECK Brake release circuit	1
4-	128420GT	SEAL KIT	

406.2 Brake and 2 Speed Manifold (from SN 25202)

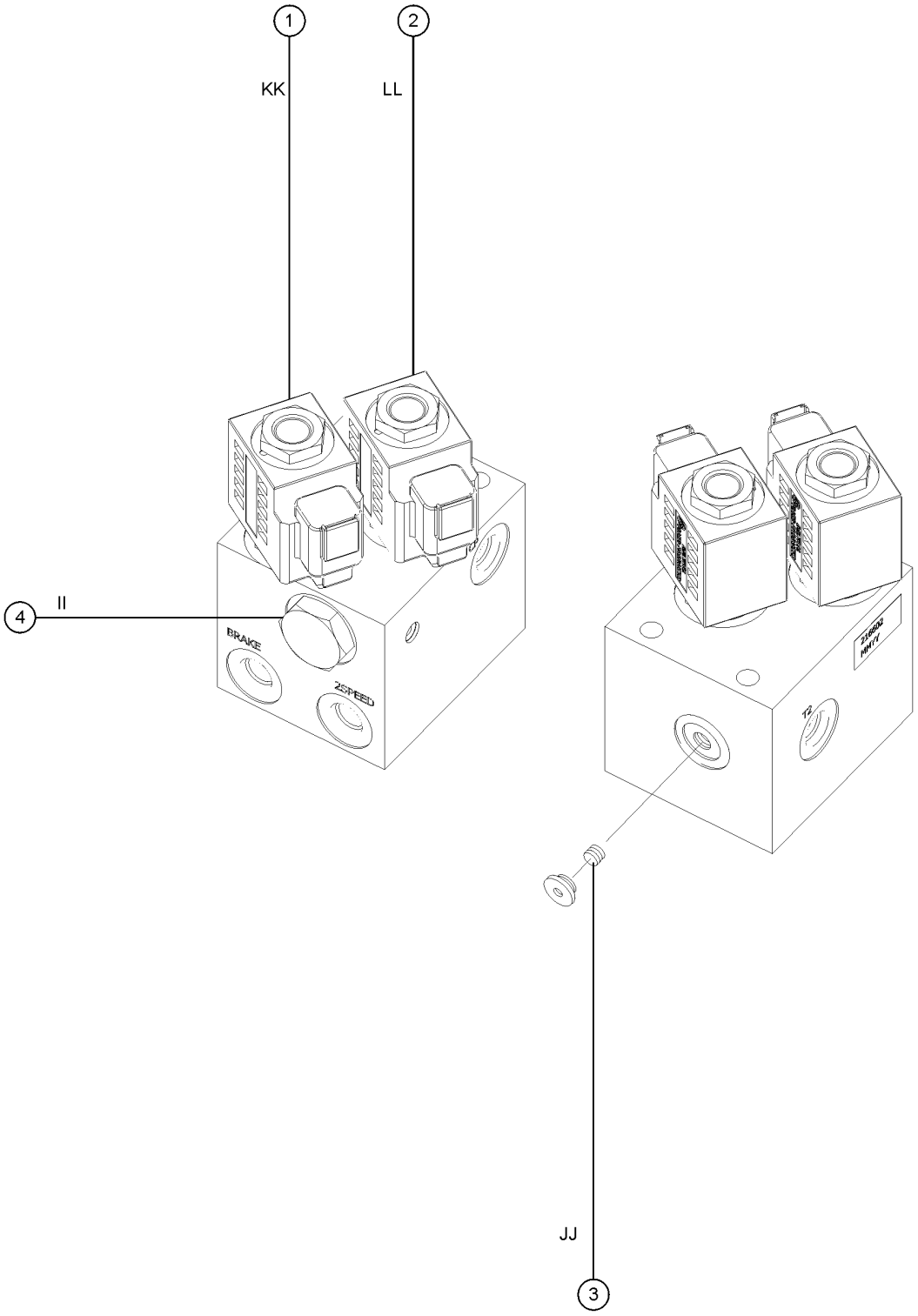

406.2 Brake and 2 Speed Manifold (from SN 25202)

Item	Part No.	Description	Qty.
-	216602GT	MANIFOLD,BRAKE,2-SPEED	1
1	219243GT	COIL, SOLENOID VALVE, 10V Brake Release	1
1-	161144GT	SEAL KIT,SOLENOID VALVE 219247	
1-	94759GT	NUT,SOLENOID	
1-	219247GT	VALVE, SOLENOID	
2	219243GT	COIL, SOLENOID VALVE, 10V Two Speed Motor Shift	1
2-	161144GT	SEAL KIT,SOLENOID VALVE 219247	
2-	94759GT	NUT,SOLENOID	
2-	219247GT	VALVE, SOLENOID	
3	219245GT	ORIFICE PLUG .025 DIA. Turntable Rotation Brake Release	1
4	35726GT	VALVE,HYDRAULIC CHECK Brake Release Circut	1
4-	161145GT	SEAL KIT,CHECK VALVE 219246	

501.1 Deutz D2011L03i

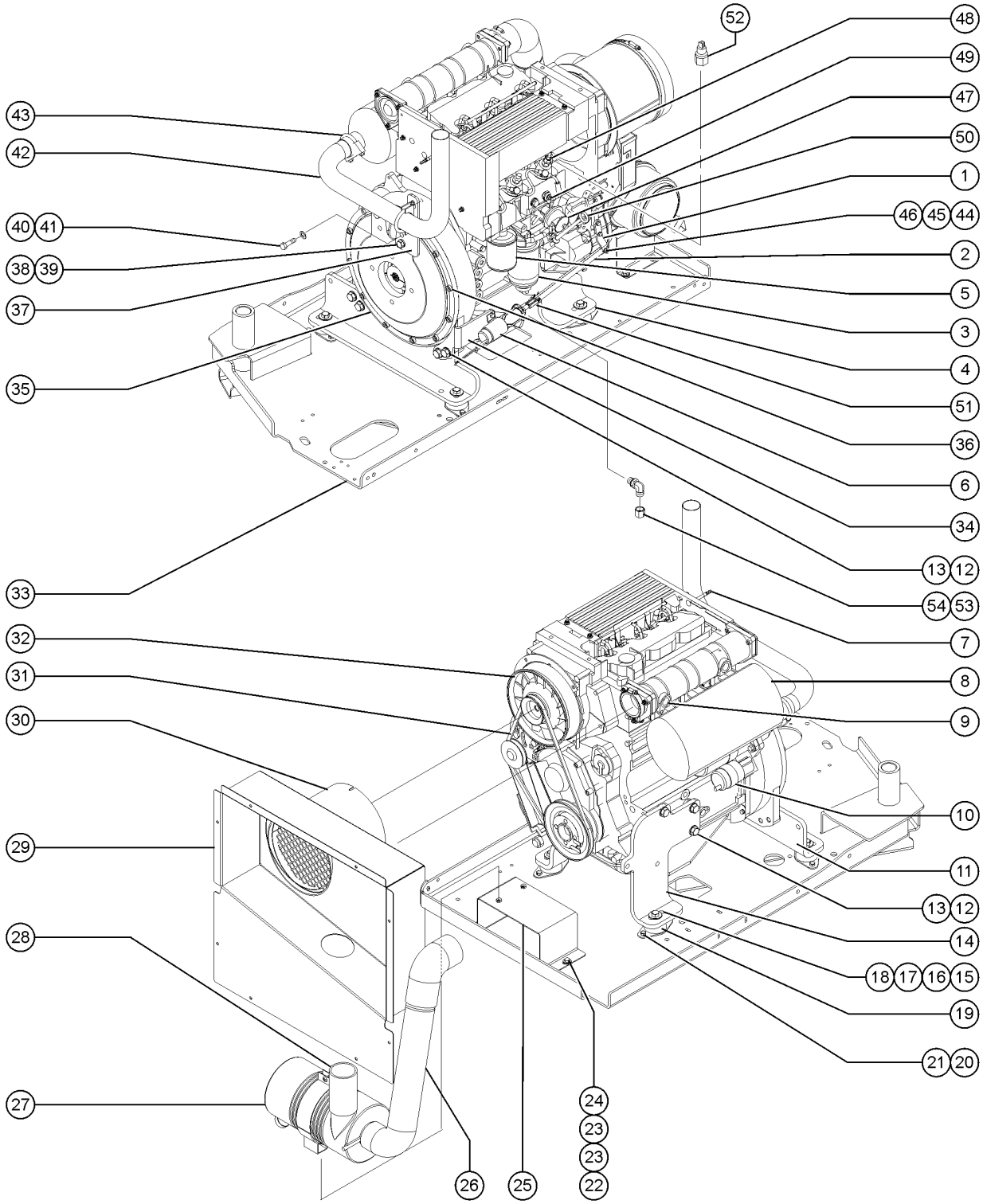

Item	Part No.	Description	Qty.
A-	139622GT	HEAT SHIELD,DEUTZ STARTER	
B-	70453GT	ENGINE,DEUTZ D2011L03I F3L1011 AND F3L1011F Engines only	
D-	T114678GT	SHUTDOWN SOLENOID,12V, DEUTZ (must order cable assembly, 58256, if replacing 32752) (includes o-ring)	1
E-	58256GT	SOLENOID CABLE ASSY***	
F-	72255GT	CONNECTOR, DEUTZ FUEL SHUTOFF* (does not include diode, 45782)	
G-	56445GT	DIODE,6 AMP 200 PIV,REEL	
1	50787-SGT	LEVER, GOVERNOR ACTUATOR	1
2	94485GT	THROTTLE LINKAGE,DIESEL***	1
3	29560GT	FILTER,FUEL/WTR SEP, DTZ 1008 Genie Genuine Part. See PN 1254826 for compatible aftermarket replacement.	1
3-	58566GT	FILTER HEAD (29560) aluminum - verify before ordering	
3-	236946GT	PLASTIC FILTER HEAD verify before ordering	
3-	1254826GT	FUEL FILTER W/SEP,DEUTZ,1008 Genie Aftermarket Part. Filter for Deutz F3L 1011F Engine.	
4	70460PGT	FORMING,ENGINE MOUNT,FR PAINT*	1
5	49924GT	FILTER,OIL,DEUTZ Genie Genuine Part. See PN 1255653 for compatible aftermarket replacement.	1
5-	1255653GT	FILTER,OIL,DEUTZ,REPLACEMENT Genie Aftermarket Part. Compatible with Genie Genuine Part 49924.	1
6	77402GT	SOLENOID,THROTTLE ACTUATOR DSL	1
7	147525GT	FITTING,BARBED,STRT,FUEL LINE	1
7-	147526GT	FITTING,BARBED,TEE,FUEL LINE (not shown)	
7-	30490GT	HOSE,1/4 FUEL LINE,SAE 30R7	127 inches
8A	32695GT	MUFFLER,DEUTZ	1
8B	119117GT	MUFFLER,CAT/SPARK,DEUTZ spark arrest option	
8C	29559GT	GASKET,EXHAUST for 119117, 3 required	3
9	31408GT	GLOW PLUG,L1011	1
10	139709GT	STARTER, 12V	1
10-	139621GT	KIT, HEAT GUARD, DEUTZ STARTER (includes 139622 and 139623)	
10-	139622GT	HEAT SHIELD,DEUTZ STARTER (from SN 21069)	
10-	139623GT	BOLT, GUARD, DEUTZ STARTER (from SN 21069)	

501.1 Deutz D2011L03i

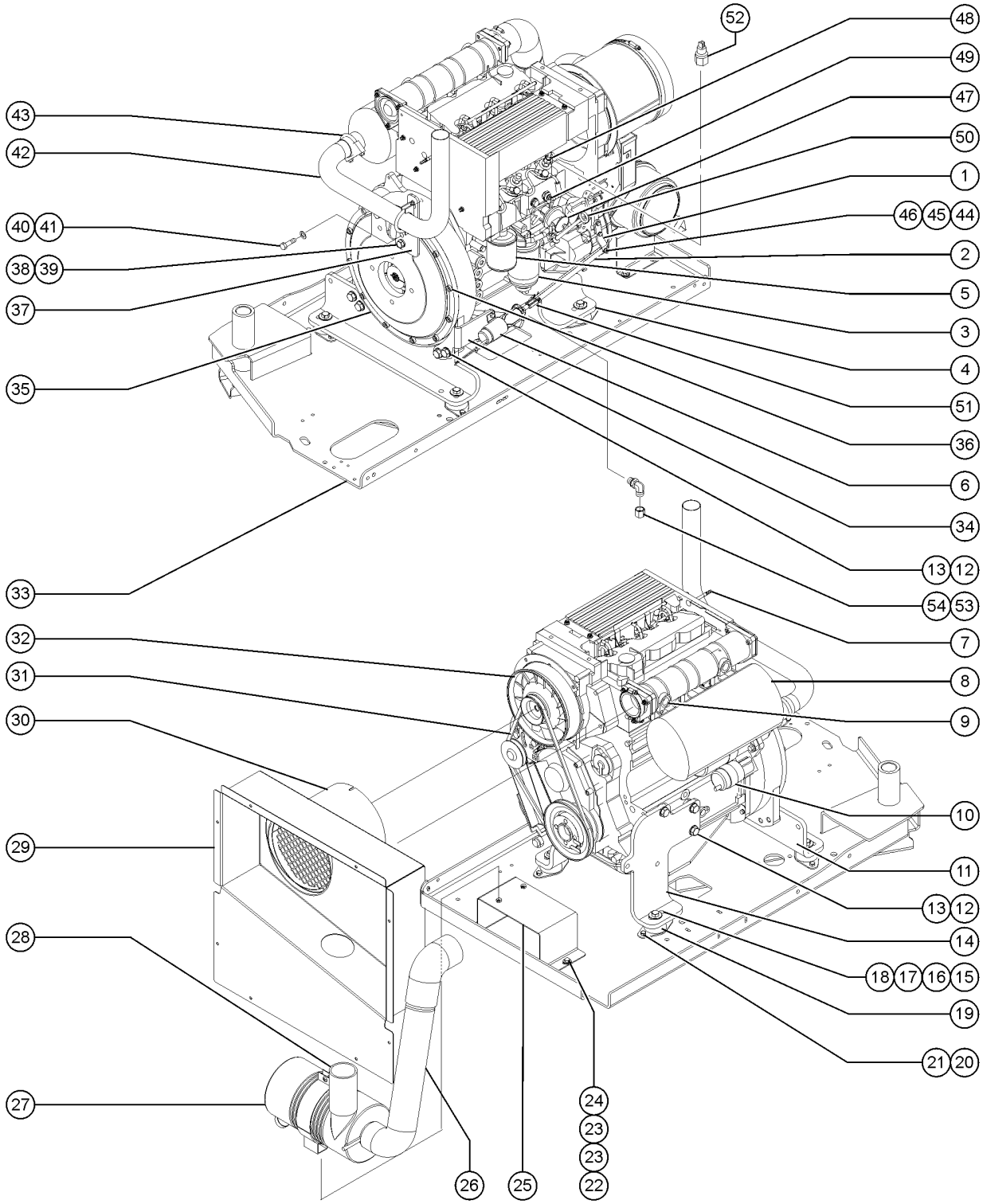

Item	Part No.	Description	Qty.
11	70459PGT	FORMING,REAR ENGINE MOUNT PNT*	1
12	22558GT	SCREW,HHC,M14 X 40MM,GR 8.8	
13	49411GT	WASHER,FLAT,M14	
14	70461PGT	FORMING,ENGINE MOUNT,FL PAINT*	1
15	10598GT	SCREW,HHC,1/2-13 X 3	
16	6095GT	WASHER,FLAT,USS,1/2",Y	
17	24040GT	WASHER, 1/2 PLATE (1/2 X 2.25 X 3/16)	
18	6198GT	NUT, NYLOCK, 1/2-13	
19	70452GT	ISOLATOR,ENGINE VIBRATION	4
20	6175GT	SCREW,HHC,3/8-16 X 1	
21	6097GT	WASHER, FLAT, USS, 3/8", Y	
22	13002GT	SCREW,HHC,5/16-18 X 1 GR5	
23	5397GT	WASHER, FLAT, USS, 5/16-18	
24	6782GT	NUT, NYLOCK, 5/16-18	
25	70351PGT	FORMING,AIR CLEANER MOUNT PNTD	1
26	70375GT	HOSE,AIR CLEANER	1
27	63463GT	AIR CLEANER,NELSON***	1
27-	62420GT	FILTER, AIR D2.9L4	
27-	53952GT	BRKT,AIR CLEANER ORIENTATION**	
27-	52866GT	EVACUATOR VALVE-AIR CLEANER	
28	101006GT	TUBE,AIR CLEANER INLET	1
28-	30971GT	CLAMP,HOSE,3.00"	2
29	70494PGT	FORMING,DEUTZ AIR INTAKE BAF P	1
30	101140P-SGT	AIR INTAKE TUBE ASSY	1
30-	33239GT	WELDMENT, AIR INTAKE TUBE	
30-	31523GT	CLAMP,HOSE,8.50 DIA***	
31	32698GT	BELT	1
32	35586GT	ALTERNATOR, DEUTZ F3L10/F4L10*	1

501.1 Deutz D2011L03i

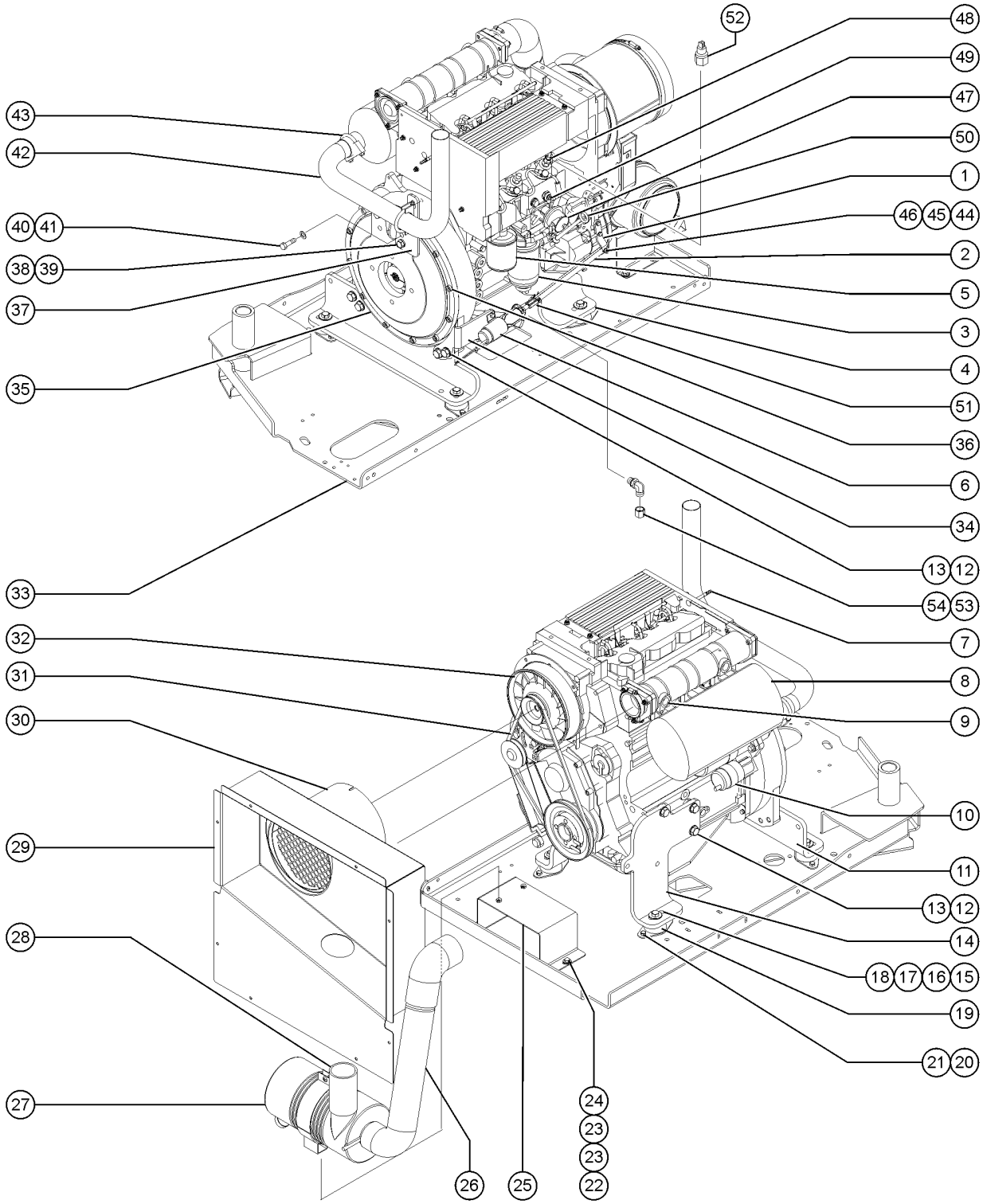

Item	Part No.	Description	Qty.
33	101540GT	ENGINE TRAY ASSY W/BEARINGS	1
33-	35675GT	BEARING,FL,1.25IDX1.5ODX1.25L	1
34	101129PGT	BRACKET,SOLENOID MOUNT PAINT	1
34-	77245PGT	BRACKET,SOLEN.MOUNT BRACE,PNTD (not shown) (very small)	1
35	70381GT	COVER,FLYWHEEL CASTING	1
35-	128023GT	KIT,FBA STYLE COUPLER,SAE8	
36	44064GT	SCREW,HHC,M10 X 30MM,	
37	70472PGT	FORMING,SOLENOID MOUNT PAINT	1
38	10597GT	SCREW,HHC,1/2-13 X 1.25 GR5	
39	6033GT	WASHER,LOCK,0.5"	
40	85053GT	SCREW,HHC,M10 X 1.5 X70,GR 8.8	2
41	22699GT	WASHER, FLAT, M10, ZINC PLTD.	
42	70499GT	EXHAUST PIPE,DEUTZ	1
43	70385GT	CLAMP,EXHAUST,2.00 PLATED	2
44	6584GT	SCREW,SHS,10-24 X .625	
45	85054GT	WASHER,FLAT,M10	
46	25625GT	NUT,HEX,10-24	
47	111668GT	PUMP,FUEL 2011 DEUTZ ***	1
47-	27089GT	HOSE,5/16 FUEL,SAE 30R7	116 inches
47-	119344GT	KIT,PRIMER BULB	
48	89792GT	INJECTOR, FUEL(DEUTZ F3L2011F)	2
48-	1288561GT	O-RING,FUEL INJECTOR,DEUTZ (89792) for 89792	
49	139624GT	SWITCH, OIL PRESSURE 1.5 BAR	1
49-	139666GT	KIT,OP SWITCH,DEUTZ (oil pressure kit for models with ALC-500 control system. replaces 65765. includes item 139624 and instructions)	
50	147243GT	DIPSTICK, OIL, D2011	1
51	21130GT	CLEVIS YOKE-1/4-28,PLTD W/PIN	1
52	111445GT	SENDING UNIT,OIL TEMP SWCH,DTZ	1

501.1 Deutz D2011L03i

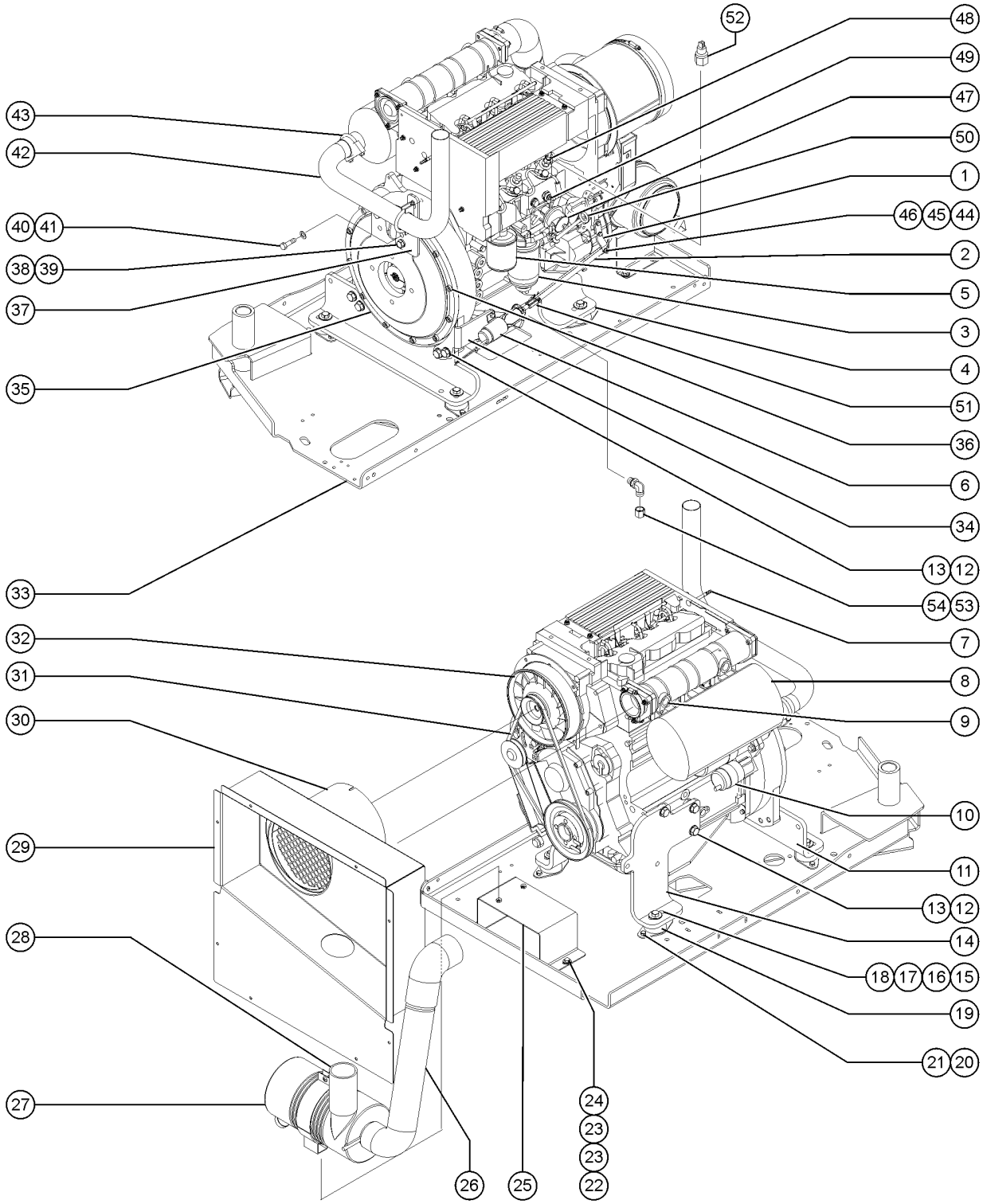

Item	Part No.	Description	Qty.
53	54428GT	FITTING, HYDRUALIC, 90DEG, O-RING	1
54	69775GT	CAP, 520112-8	1

502.1 Perkins 404-22

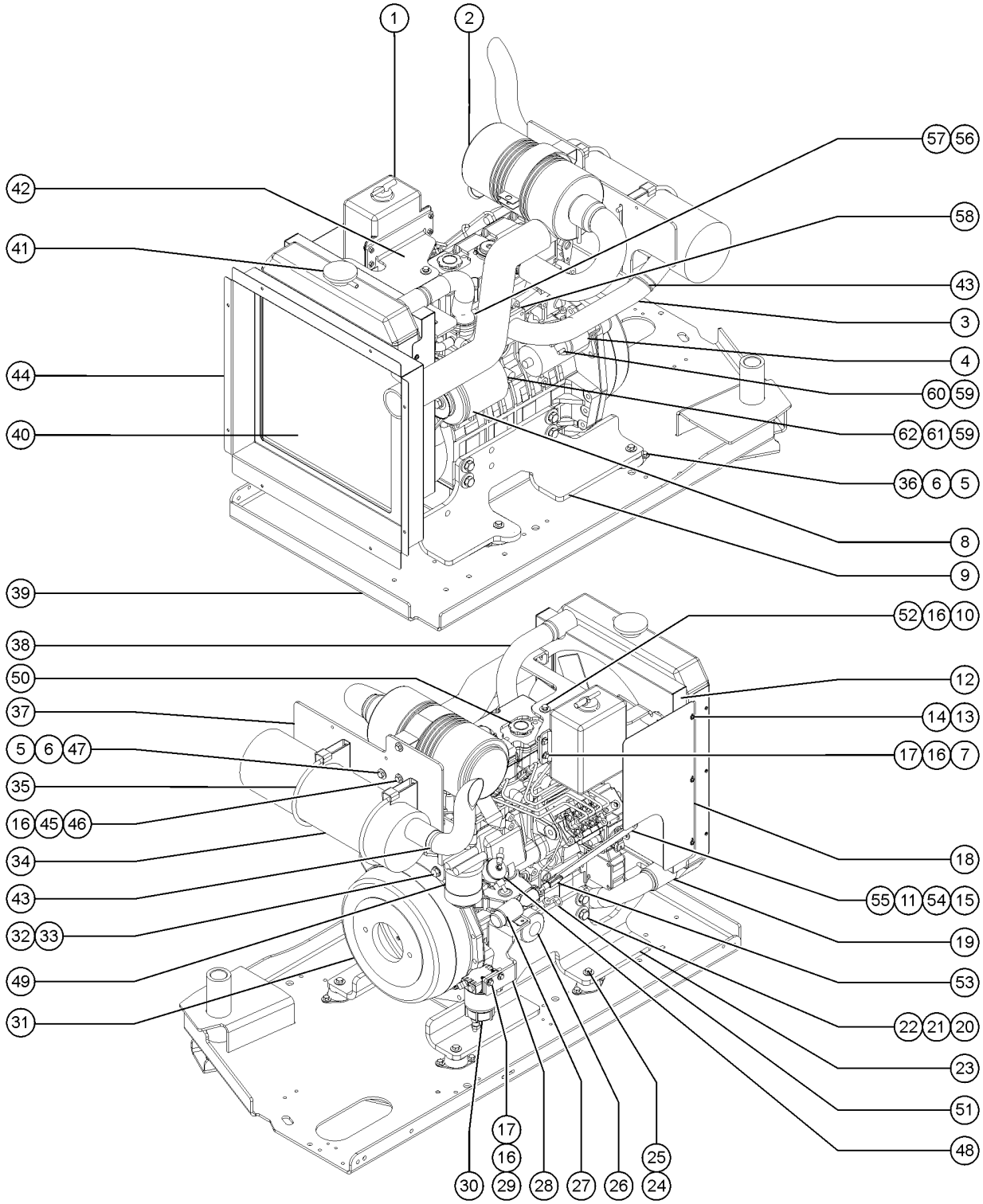

Item	Part No.	Description	Qty.
-		For internal engine parts, contact engine dealer	
A	128831GT	ENGINE,PERKINS,DIESEL 404D-22 Tier III Engine	
A-	128987GT	WATER PUMP (for 128831 engine)	
A-	58354GT	GASKET,WATER PUMP (for 128831 engine)	
A-	85155GT	PUMP,PRIMER,PERKINS*** (for 128831 engine)	
A-	1262469GT	OIL PRESSURE SWITCH,PERKINS 404D-22T	
A-	97473GT	SENSOR,WATER TEMPERATURE (for 128831 engine)	
A-	94887GT	INTAKE MANIFOLD (for 128831 engine)	
A-	72348GT	PUMP,LIFT(FUEL) PERKINS(54555) (for 128831 engine)	
A-	77736GT	GLOW PLUG (PERKINS 404-22) (for 128831 engine)	
A-	106663GT	SOLENOID,SHUT DOWN PERKIN40422 (for 128831 engine)	
A-	94890GT	MANUAL,OPERATORS PERKINS 404 (for 128831 engine)	
A-	65538GT	FLYWHEEL (PERKINS KR70481U)** (for 128831 engine)	
B	147350GT	GASKET-CYLINDER HEAD (for Perkins 404 engine)	
C	147348GT	SEAL-VALVE SYSTEM (A) (for Perkins 404 engine)	
D	147351GT	SEAL-ROCKER BOX (for Perkins 404 engine)	
E	147352GT	SEAL-INJECTOR (for Perkins 404 engine)	
F	147353GT	SEAL-INJECTOR (for Perkins 404 engine)	
1	70367GT	BOTTLE,COOLANT RECOVERY,3.7***	1
1-	115431GT	CAP ASSY, COOLANT BOTTLE	
1-	106226-4000GT	TUBING, VINYL, 1/2" CLEAR	
2	63463GT	AIR CLEANER,NELSON***	1
2-	62420GT	FILTER, AIR D2.9L4	
2-	53952GT	BRKT,AIR CLEANER ORIENTATION**	
2-	88846GT	HOSE,AIR INLET	
2-	88847GT	HOSE,AIR CLEANER TO INTAKE	
2-	52866GT	EVACUATOR VALVE-AIR CLEANER	
3	110899GT	WELDMENT,EXHAUST PIPE	1

502.1 Perkins 404-22

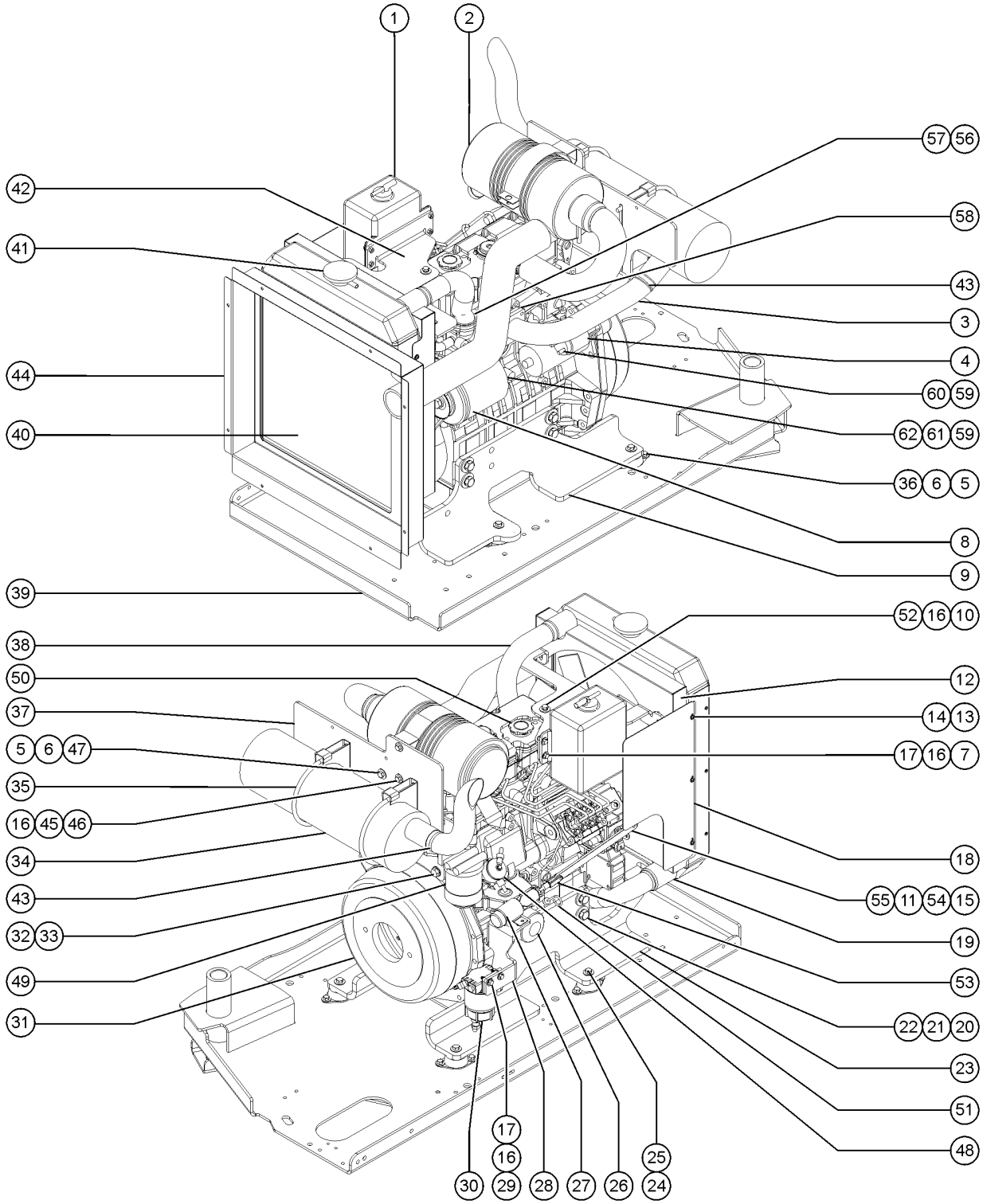

Item	Part No.	Description	Qty.
3-	94888GT	EXHAUST MANIFOLD sold separately	
3-	1314265GT	GASKET, EXHAUST MNFLD, PERKINS 404D-22 (94888)	
3-	94711GT	FLANGE,EXHAUST sold separately	
3-	72343GT	GASKET,EXH FLANGE-FORD/PERKINS sold separately	1
3-	72344GT	BOLT,EXHAUST,PERKINS(54555)** sold separately	
3-	62845GT	NUT-FLANGE, 8MM (62849) sold separately	
4	1262585GT	STARTER MOTOR,PERKINS 404D	1
5	6175GT	SCREW,HHC,3/8-16 X 1	
6	5397GT	WASHER, FLAT, USS, 5/16-18	
7	6888GT	SCREW, HHC, 1/4-20 X 1	
8	111029GT	ALTERNATOR,65 AMP,PERKINS 404	1
8B	89765GT	BELT, V (PERKINS 404)	1
9	161611GT	FORMING, ENGINE MOUNT, PERKINS	1
10	23057GT	SCREW,HHC,M8 X 20MM	
11	33277GT	WASHER,FLAT,M8,YELLOW ZINC	
12	88990PGT	SHROUD,FAN PAINTED	1
13	21019GT	SCREW,PHIL,PHM,10-24 X.5,SEMS	
14	6146GT	WASHER,FLAT,MS,#10,Y	
15	89953GT	FLATBAR,ALUM,THROTTLE LINKAGE	1
16	6638GT	WASHER, FLAT, USS, 1/4"Y	
17	6091GT	NUT,NYLOCK,1/4-20	
18	54487PGT	GUARD,FAN,FORD/PERKINS,PAINTED	1
19	54579GT	HOSE,LOWER,RADIATOR,PERKINS	1
19-	22672GT	CLAMP,HOSE,1.75	
20	54687GT	SCREW,HHC,M14 X 1.5X40MM,GR8.8	
21	37505GT	WASHER,LOCK,M14	
22	49411GT	WASHER,FLAT,M14	
23	88988PGT	FORMING,ENGINE MOUNT RH PAINTE	1

502.1 Perkins 404-22

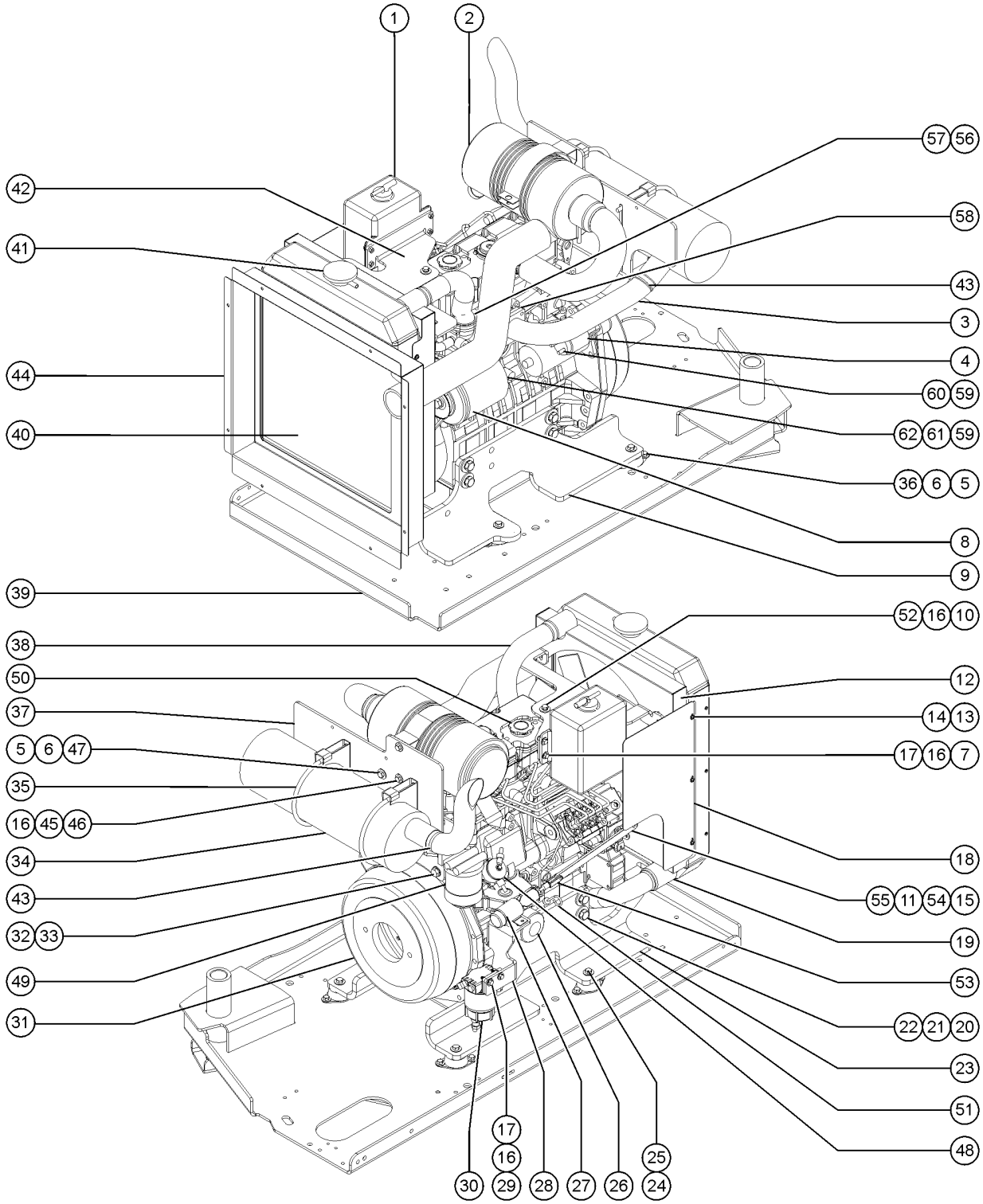

Item	Part No.	Description	Qty.
24	10598GT	SCREW,HHC,1/2-13 X 3	
25	6095GT	WASHER,FLAT,USS,1/2",Y	
26	94762GT	OIL FILTER - PERKINS	1
27	77402GT	SOLENOID,THROTTLE ACTUATOR DSL	1
27-	21130GT	CLEVIS YOKE-1/4-28,PLTD W/PIN	
27-	89953GT	FLATBAR,ALUM,THROTTLE LINKAGE	
28	128588GT	FORMING,SOLENOID MOUNT	1
29	8915GT	SCREW, HHC, 1/4-20 X 1.25	
30	147826GT	SEPRTR/FLTR,FUEL DSL,15GPH,.30 (replaced 75020, the filter is the same for both assemblies)	1
30-	62433GT	FILTER,ELEMENT,30 MIC,75020	
30-	54437GT	HOSE END,BARB,1/4 MNPTX5/16,ST (included with filter assembly)	
30-	54205GT	HOSE END,BARB,1/4 MNPTX5/16,90 (included with filter assembly)	
31	89771GT	HOUSING,PUMP MOUNT (54573)	1
31-	128022GT	KIT,FBA STYLE COUPLER,PERKINS includes 15-tooth coupler (128003), fastener kit (1263209) and grease	
31-	128003GT	COUPLER,15 TOOTH,FBA,PERKINS** includes grease	1
31-	128024GT	SCREW, HHC, M8 X 1.25 X 12	6
31-	128025GT	GREASE,SERVICE PACKET	1
32	60868GT	SCREW,HHC,M12 X 45	
33	49410GT	WASHER, FLAT, M12	
34A	88841GT	MUFFLER,6"	1
34B	70298GT	MUFFLER,SPARK ARRESTOR spark arrestor option	1
34C	70357GT	MUFFLER,CATALYTIC scrubber muffler option	1
34D	822515GT	TAILPIPE, PERKINS, 404D	1
35	88993GT	CLAMP,MUFFLER	2
36	4828GT	NUT, NYLOCK, 3/8-16	
37	88991PGT	FORMING,MUFFLER MOUNT PAINTED	1
38	54578GT	HOSE,UPPER RADIATOR,PERKINS	1
38-	22672GT	CLAMP,HOSE,1.75	

502.1 Perkins 404-22

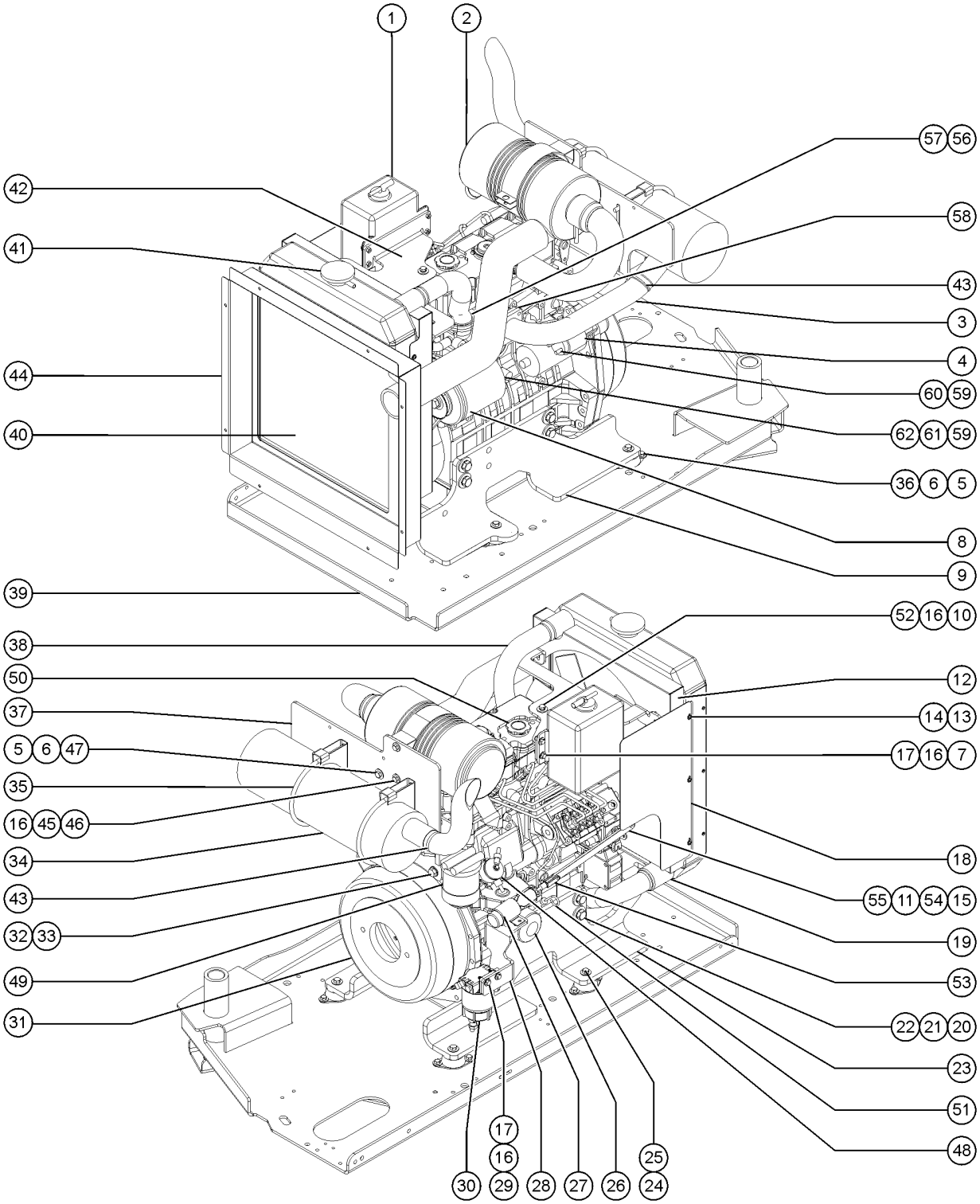

Item	Part No.	Description	Qty.
39		Ref. Engine Tray Assembly (refer to 310.1)	
40	110304GT	RADIATOR,FORD/PERKINS***	1
40-	77482GT	PULLEY, WATER PUMP sold separately	1
40-	77483GT	FAN, ENGINE (104-22)(404-22)* sold separately	1
40-	1252943GT	SPACER,FAN,PERKINS 404F sold separately	1
40-	24038GT	SHOCK MOUNT,SMALL sold separately	4
41	65473GT	CAP,RADIATOR,PERKINS/FORD	1
42	88989PGT	FORMING,UPPER RAD SUPPORT PNTD	1
43	70385GT	CLAMP,EXHAUST,2.00 PLATED	2
44	106003PGT	BAFFLE,PERKINS ENGINE PAINTED	1
45	6782GT	NUT, NYLOCK, 5/16-18	
46	13002GT	SCREW,HHC,5/16-18 X 1 GR5	
47	7713GT	NUT, LP NYLOCK, 3/8-16	
48	72348GT	PUMP,LIFT(FUEL) PERKINS(54555)	1
48-	77990GT	KIT,SEAL,3CC PUMP***	
49	1262484GT	FUEL FILTER ASSY,PERKINS 404D/	1
49-	62421GT	FILTER,FUEL,PERKINS	1
50	65636GT	CAP, OIL FILLER	1
50-	65638GT	SEAL, OIL FILLER CAP	1
51	128984GT	DIPSTICK, STRAIGHT SHORT	1
51-	128985GT	DIPSTICK TUBE, STRAIGHT SH	1
52	60585GT	ISOLATOR,VIBRATION,M8 MALE/FEM	1
53	21130GT	CLEVIS YOKE-1/4-28,PLTD W/PIN	1
54	119866GT	SCREW,SHS,M6X12MM,8MM	
55	49364GT	NUT,NYLOCK,M6X1.00	
56	128986GT	WATER OUTLET, VERTICAL	1
57	128991GT	THERMOSTAT	1
57-	147355GT	GASKET-THERMOSTAT HSG for 128991, Engine block Thermostat	1

502.1 Perkins 404-22

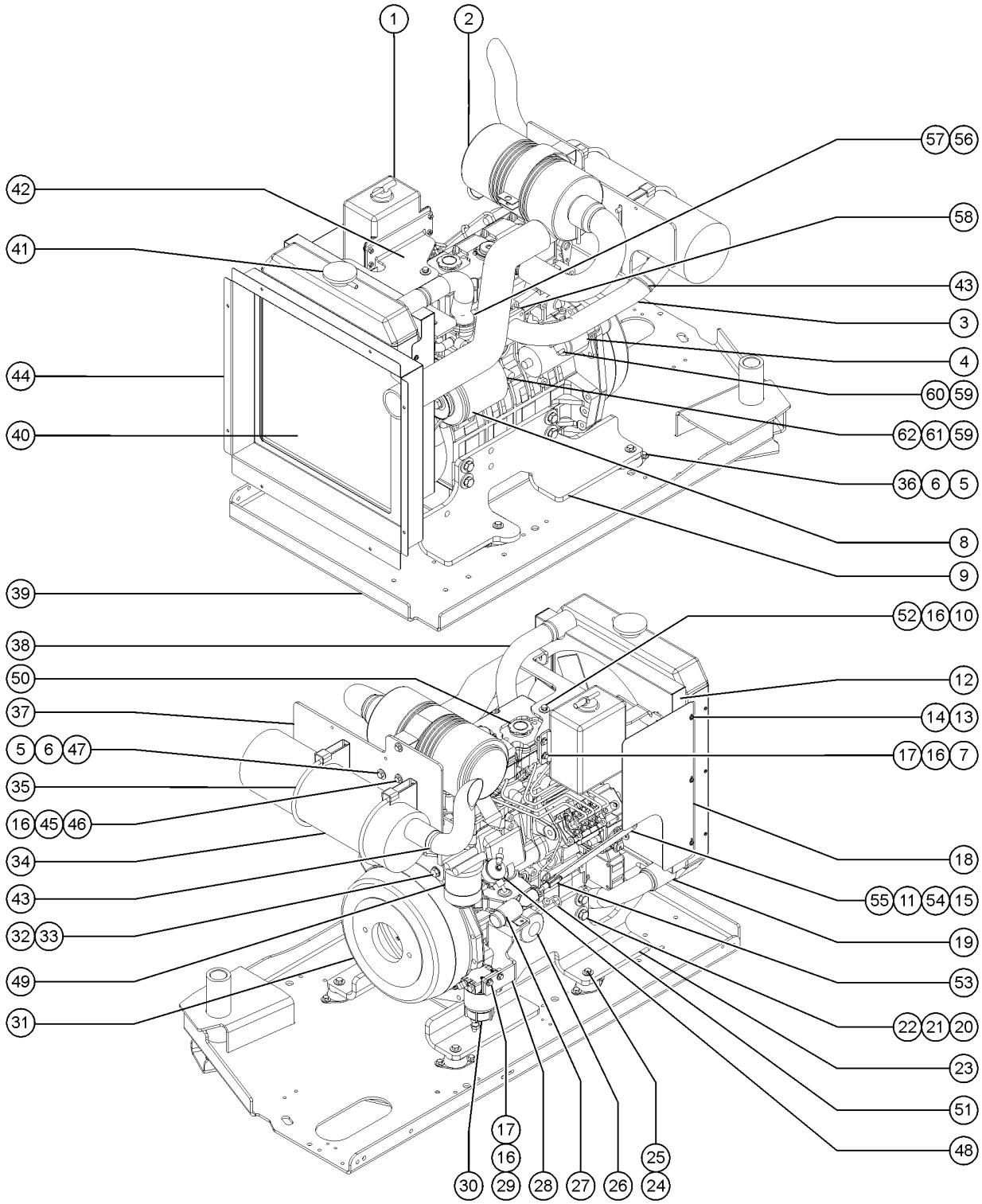

Item	*Part No.*	*Description*	*Qty.*
57-	77477GT	GASKET,THERMOSTAT HSG Vertical Thermostat	
58	72343GT	GASKET,EXH FLANGE-FORD/PERKINS	1
59	231513GT	NUT,TL FLG,M6-1.0,DIN6927,10,Z	
60	237832GT	NUT,TL FLG,M8-1.25,DIN6927,10,ZAB	
61	826215GT	WASHER,FLAT,M5,DIN125,ZAB	
62	826214GT	NUT,TL,M5-0.8,DIN980,10,ZAB	

503.1 Ford DSG-423 Engine - View 1 (to SN 24508)

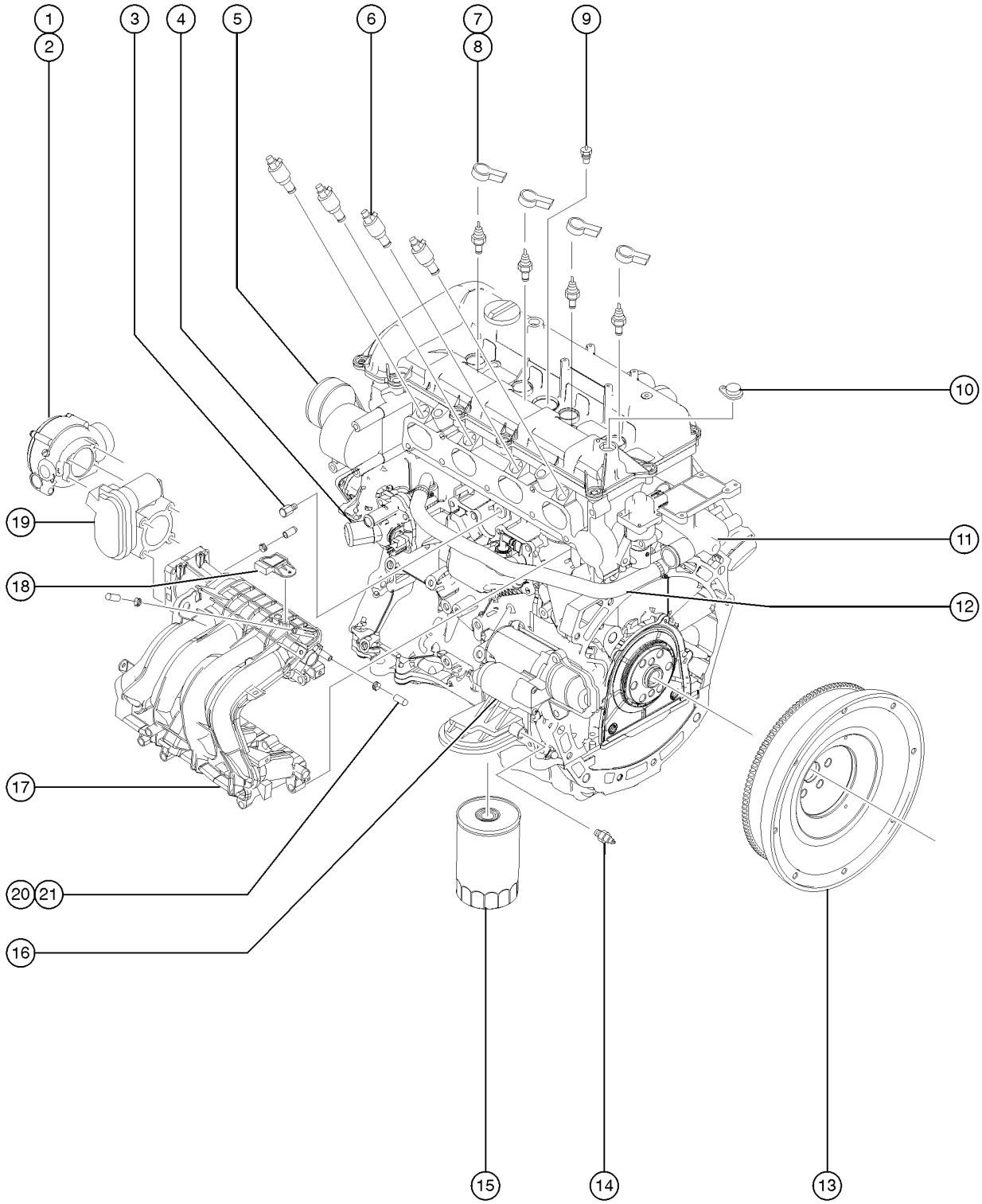

503.1 Ford DSG-423 Engine - View 1 (to SN 24508)

Item	Part No.	Description	Qty.
		The Ford DSG-423 is not available for the S-60TX and the S-65TX	
	119472GT	HARNESS,ENGINE FORD DSG-423	
	128165GT	RELAY,PWR/FUEL,FORD DSG423	
	128166GT	RELAY,STARTER,FORD DSG/MSG	
1	119135GT	MIXER,LPG,DSG-423	1
1-	119500GT	GASKET,MIXER, FORD DSG423	
1-	119547GT	O-RING,MIXER,SMOOTHED,DSG-423	
1-	119548GT	O-RING,MIXER,RIBBED,DSG-423	
2	119142GT	ADAPTER,MIXER/THROTTLE BODY	1
2-	119466GT	GASKET,ACTUATOR PLATE	
3	119498GT	SENSOR,KNOCK DSG-423 FORD	1
4	119551GT	THERMOSTAT,FORD DSG423	1
5	215298GT	UPPER IDLER PULLEY, MSG425	1
6	119479GT	FUEL INJECTOR FORD DSG423,YL yellow injector	4
6-	233365GT	FUEL INJECTOR FORD DSG423, BK black injector	
7	119478GT	COIL ASSEMBLY	4
8	119495GT	SPARK PLUG, FORD DSG-423	4
9	234005GT	SENSOR KIT, TEMPERATURE Required for first time replacement of older temperature sensor part 119480 (kit includes sensor part 233437 and wire harness part 234006); to SN 21072	1
9-	233437GT	SENSOR, FORD TEMPERATURE from SN 21073	
9-	234006GT	WIRE HARNESS, SENSOR, TEMP from SN 21073	
10	119497GT	SENSOR,CAM POSITION DSG-423	1
11	214803GT	KIT, DSG423 COOLANT OUTLET Required for first time replacement of older adapter 119461 (kit includes water outlet 214796 and hose bypass 214798)	1
11-	214796GT	WATER OUTLET, FORD DSG423 Previous adapter 119461 is no longer available. Order kit 214803 for first time replacement (kit includes water outlet 214796 and hose bypass 214798)	1
12	214803GT	KIT, DSG423 COOLANT OUTLET Required for first time replacement of older hose 139780 (kit includes water outlet 214796 and hose bypass 214798)	1
11-	214798GT	HOSE, COOLANT BYPASS, DSG423 Previous hose bypass 139870 is no longer available. Order kit 214803 for first time replacement (kit includes water outlet 214796 and hose bypass 214798)	1
13	119465GT	FLYWHEEL ASSEMBLY,DSG-423 FORD	1
14	119481GT	SWITCH,OIL PRESSURE	1

503.1 Ford DSG-423 Engine - View 1 (to SN 24508)

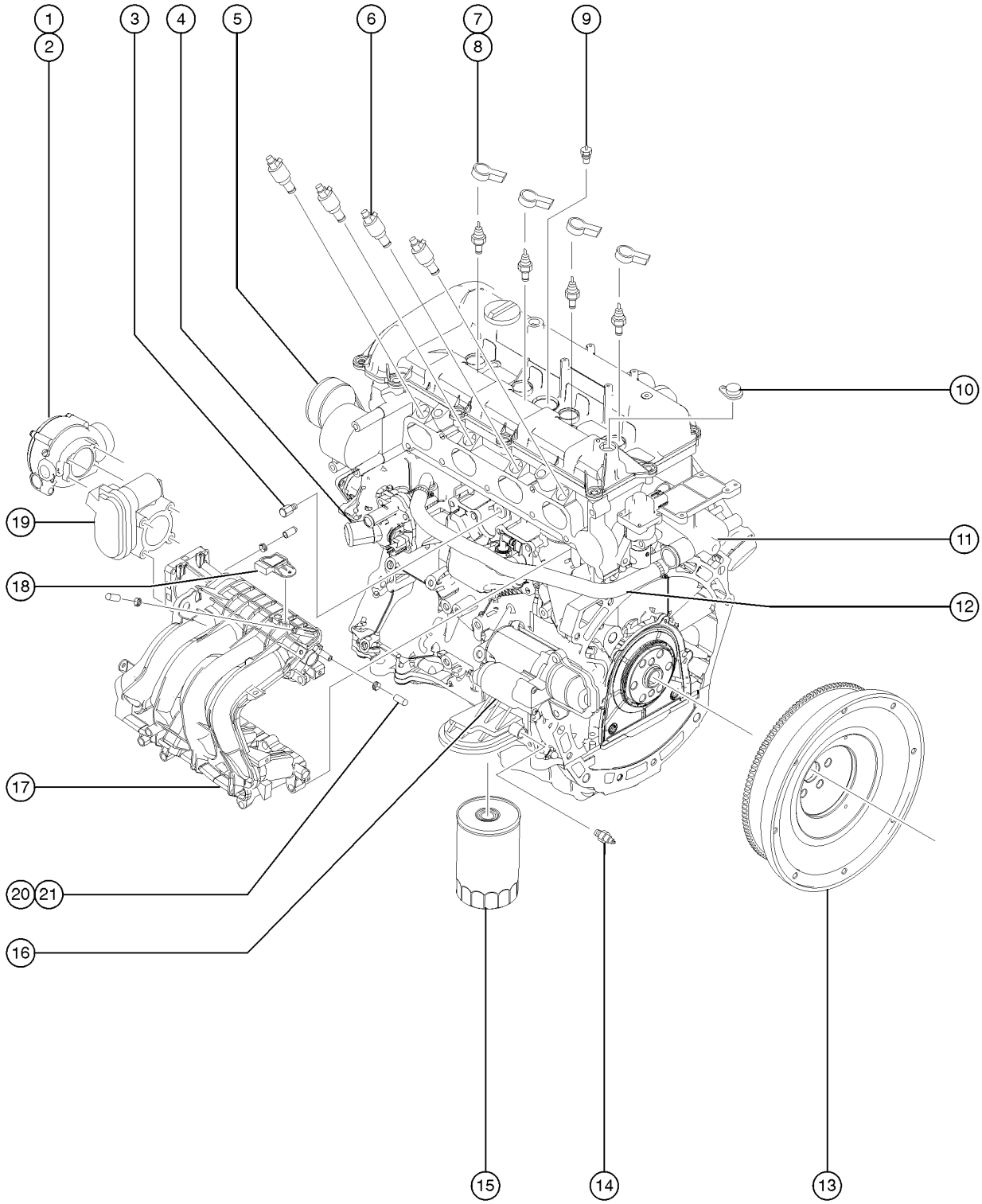

503.1 Ford DSG-423 Engine - View 1 (to SN 24508)

Item	*Part No.*	*Description*	*Qty.*
15	119139GT	OIL FILTER,DSG-423	1
16	1300882GT	STARTER,DSG-423 (FORTRESS)	1
16-		Ref. Harness, Ford Starter (refer to 307.1) Ford models (from serial number 21009)	
17		MANIFOLD,INTAKE FORD DSG-423 no longer available	1
17-	147016GT	CAP,EPDM,5/16"	2
18	119475GT	MAP SENSOR, DSG-423	1
19	88451GT	THROTTLE ACTUATOR*(BOSCH)	1
19-	88452GT	GASKET,THROTTLE ACTUATOR***	
20	147016GT	CAP,EPDM,5/16"	3
21	119568GT	CLAMP,SPRING,1/2"	3

504.1 Ford DSG-423 Engine - View 2 (to SN 24508)

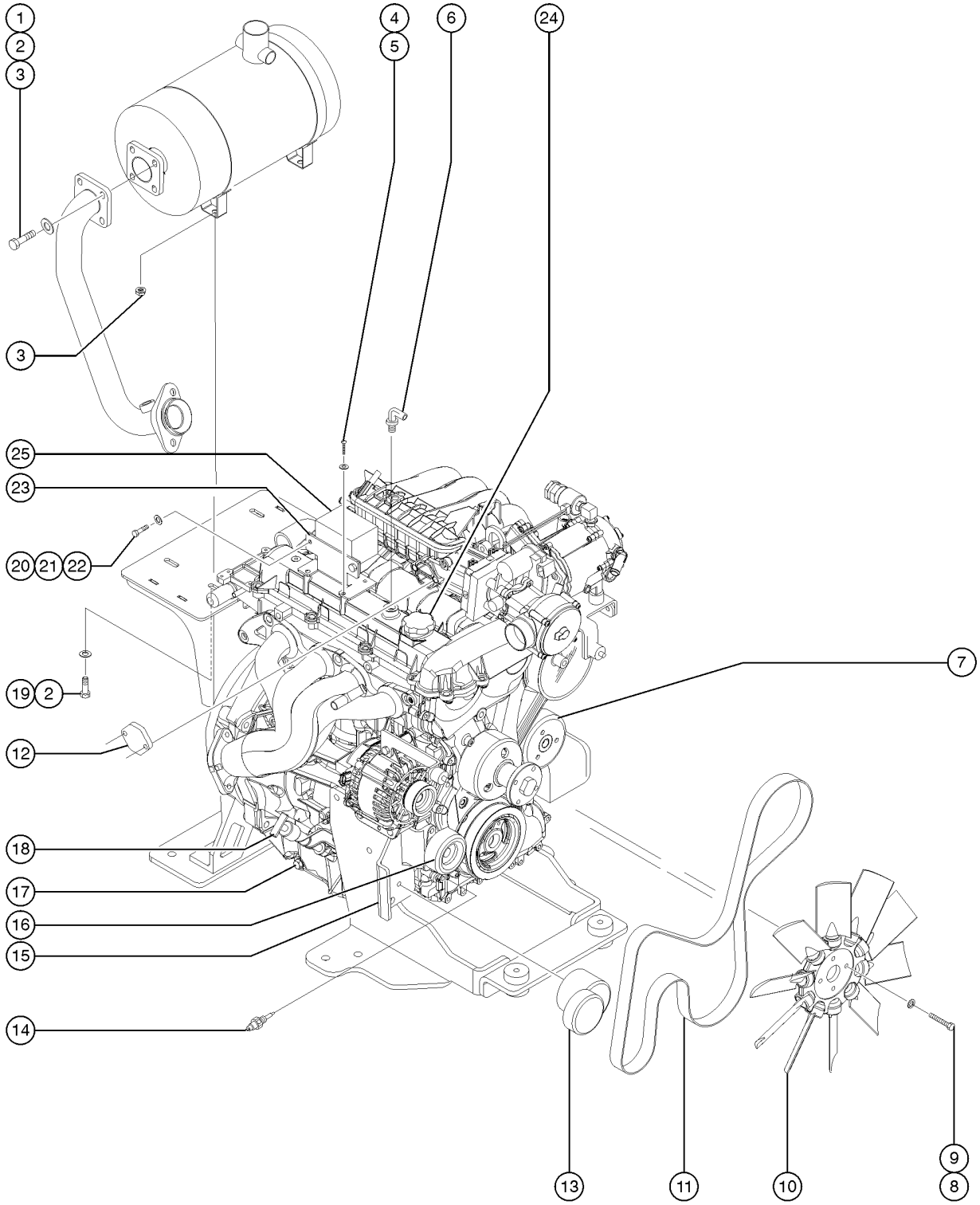

504.1 Ford DSG-423 Engine - View 2 (to SN 24508)

Item	Part No.	Description	Qty.
		The Ford DSG-423 is not available for the S-60TX and the S-65TX	
1	13000GT	SCREW,HHC,5/16-18 X 1.25	
2	5397GT	WASHER, FLAT, USS, 5/16-18	
3	18503GT	NUT, LOCKING - LG FLANGE 5/16 - 18	
4	54365GT	SCREW,PHIL,PHM,10-32 X .5,SSTL	
5	25926GT	WASHER,FLAT,M6 PLTD.	
6	119474GT	VALVE,PCV FORD DSG-423	1
6-	75631GT	HOSE,AIR 3/8	
7	119468GT	WATER PUMP W/GASKET	1
8	32309GT	SCREW,HHC,M8 X 60MM X 1.25	
9	49408GT	WASHER, LOCK, M8	
10	119153GT	FAN (FORD TIER 3)	1
11	119138GT	BELT,SERPENTINE,DSG-423 No longer available,(Replaced by 1316077)	1
11B	1316077GT	KIT, AUTOMATIC BELT TENSIONER, DSG423	1
12	119964GT	PLATE,BLANKING,FORD DSG423	1
13	119469GT	PULLEY AND TENSIONER,DSG423 No longer available,(Replaced by 1316077)	1
13B	1316077GT	KIT, AUTOMATIC BELT TENSIONER, DSG423	1
14	119496GT	SENSOR,CRANK POSITION DSG-423	1
15	119471GT	BRACKET,TENSIONER No longer available,(Replaced by 1316077)	1
15B	1316077GT	KIT, AUTOMATIC BELT TENSIONER, DSG423	1
16	119544GT	LOWER IDLER FORD DSG-423 No longer available,(Replaced by 1316077)	1
16B	1316077GT	KIT, AUTOMATIC BELT TENSIONER, DSG423	1
17	119588GT	OIL DRAIN PLUG,FORD DSG423	1
18	119473GT	DIPSTICK, FORD DSG 423	1
19	13002GT	SCREW,HHC,5/16-18 X 1 GR5	
20	6090GT	SCREW, HHC, 1/4-20 X .75	
21	6638GT	WASHER, FLAT, USS, 1/4"Y	
22	6091GT	NUT,NYLOCK,1/4-20	

504.1 Ford DSG-423 Engine - View 2 (to SN 24508)

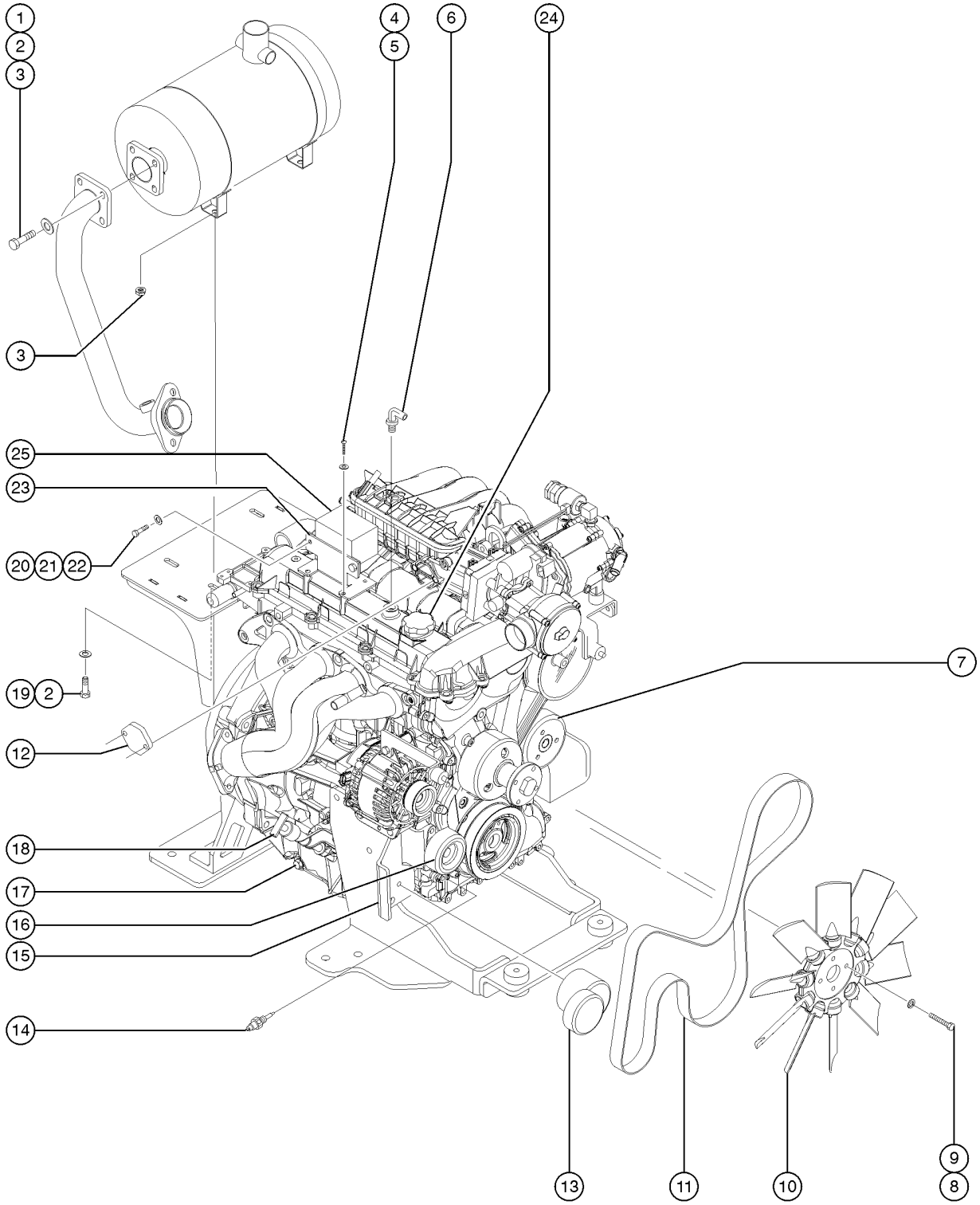

504.1 Ford DSG-423 Engine - View 2 (to SN 24508)

Item	*Part No.*	*Description*	*Qty.*
23	110768GT	BRACKET,RELAY BLOCK MOUNT	1
24	58632GT	CAP,OIL FILLER,FORD DSG 423	1
25A	237856GT	FUSE BOX COVER decal not included	1
25B	237857GT	FUSE BOX RELAY STICKER (not shown) not included with 237856, order seperately	1
25C	237858GT	FUSE BOX MOUNTING,LEFT (not shown) not included with 237856, order seperately	1
25D	237859GT	FUSE BOX MOUNTING,RIGHT (not shown) not included with 237856, order seperately	1

505.1 Ford DSG-423 Engine - View 3 (to SN 24508)

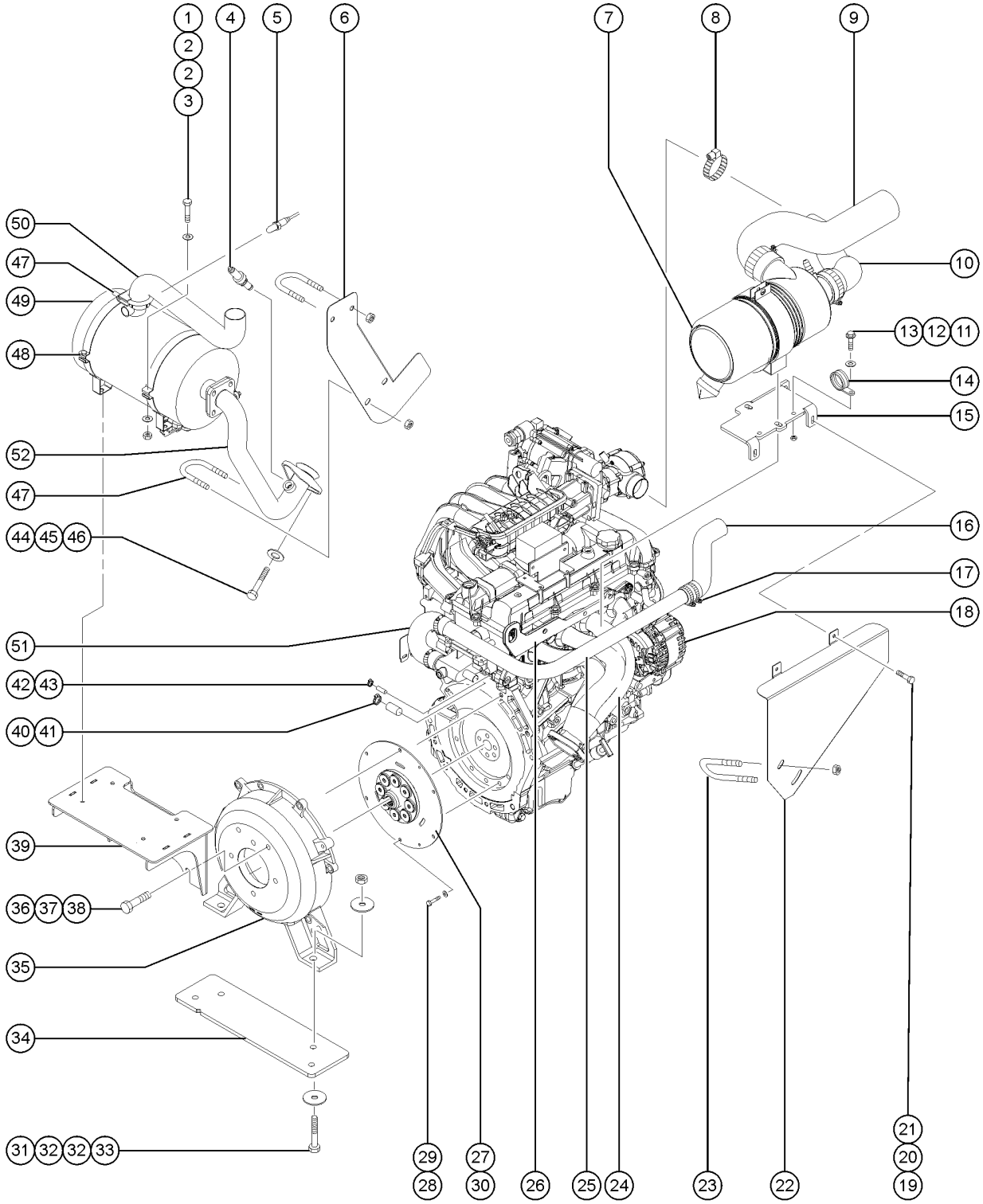

505.1 Ford DSG-423 Engine - View 3 (to SN 24508)

Item	Part No.	Description	Qty.
		The Ford DSG-423 is not available for the S-60TX and the S-65TX	
1	14033GT	SCREW, HHC, 3/8-16 X 2.75	
2	22692GT	WASHER,WAVE SPRG,1X.635X.015	
3	4828GT	NUT, NYLOCK, 3/8-16	
4	88450GT	SENSOR,OXYGEN LRG425EFI	1
5	139610GT	SENSOR,AIR,CAT MONITOR	1
6	119238GT	FORMING,HEAT SHIELD	1
7	111634GT	AIR CLEANER,FORD,T3	1
7-	227988GT	VACUATOR VALVE	
7-	77295GT	FILTER ELEMENT,AIR,NOLFF LPG	
7-	53952GT	BRKT,AIR CLEANER ORIENTATION** sold separately	
7-	58247GT	AIR CLEANER CAP/ FORD/NOLFF***	
7-	1277991GT	CLIP,AIR CLEANER COVER (58247) for 58247	
7-	38922GT	ELBOW,90DEG.1/8MPT-5/16 BARB	
8	45435GT	CLAMP,HOSE,2.50"	2
9	110421GT	HOSE,AIR INTAKE	1
9-	45435GT	CLAMP,HOSE,2.50"	
10	110422GT	HOSE,AIR,MIXER	1
11	13000GT	SCREW,HHC,5/16-18 X 1.25	1
12	5397GT	WASHER, FLAT, USS, 5/16-18	
13	18503GT	NUT, LOCKING - LG FLANGE 5/16 - 18	
14	45454GT	CLAMP,0.75,#12 X 3/8,RUB CUSH*	3
15	111614GT	FORMING,AIR CLEANER MOUNT	1
16	110758GT	HOSE,UPPER RADIATOR	1
17	119053GT	CLAMP,HOSE,1.50	2
18	1300536GT	ALTERNATOR,DSG-423,BOSCH	1
19	6888GT	SCREW, HHC, 1/4-20 X 1	
20	6638GT	WASHER, FLAT, USS, 1/4"Y	

505.1 Ford DSG-423 Engine - View 3 (to SN 24508)

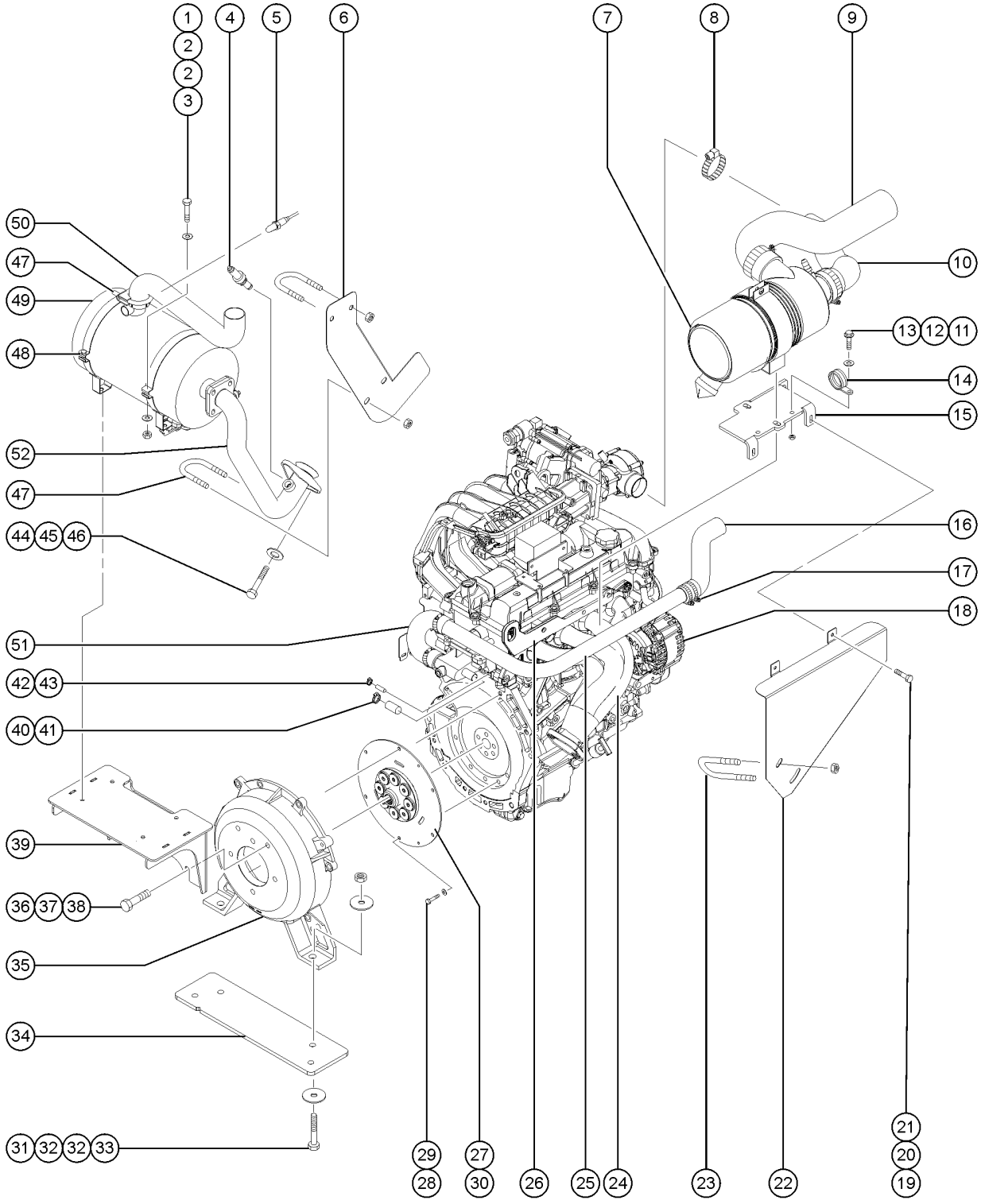

505.1 Ford DSG-423 Engine - View 3 (to SN 24508)

Item	Part No.	Description	Qty.
21	6091GT	NUT,NYLOCK,1/4-20	
22	111615GT	FORMING,HEAT SHLD,HEADER PIPE	1
23	71911GT	CLAMP,MUFFLER, 2.50 INCH	1
24	119463GT	MANIFOLD,EXHAUST TURBO	1
25	112285GT	PIPE,COOLANT RETURN,FORD 2.3L	1
26	110777GT	PLATE,REAR LIFTING EYE	1
27	128021GT	KIT,FBA STYLE COUPLER,FORD	1
28	49378GT	SCREW,HHC,M8 X 16	
29	6021GT	WASHER, LOCK, .375	
30	128002GT	COUPLER,15 TOOTH,FBA,FORD***	1
31	6096GT	SCREW,HHC,1/2-13 X 2 GR5	
32	6095GT	WASHER,FLAT,USS,1/2",Y	
33	6198GT	NUT, NYLOCK, 1/2-13	
34	119223GT	PLATE,REAR ENGINE SUPPORT	1
35	119052GT	PUMP MOUNT,FORD DSG423	1
36	10597GT	SCREW,HHC,1/2-13 X 1.25 GR5	
37	13066GT	WASHER,FLAT,.5 HARDENED	
38	6033GT	WASHER,LOCK,0.5"	
39	110480GT	WELDMENT,CAT MOUNT	1
40	119484GT	CAP,COOLANT 3/4	1
41	46131GT	CLAMP,HOSE,.63" - 1.0" X .5"	1
42	147016GT	CAP,EPDM,5/16"	1
43	147015GT	CLAMP,SPRING,7/16"	1
44	25548GT	SCREW,HHC,M10 X 40MM,GRD8	
45	22699GT	WASHER, FLAT, M10, ZINC PLTD.	
46	22700GT	WASHER,LOCK,M10	
47	102121GT	CLAMP,MUFFLER,1-7/8 IN.	3
48	119051GT	MOUNTING BAND,MUFFLER,8.0"	2

505.1 Ford DSG-423 Engine - View 3 (to SN 24508)

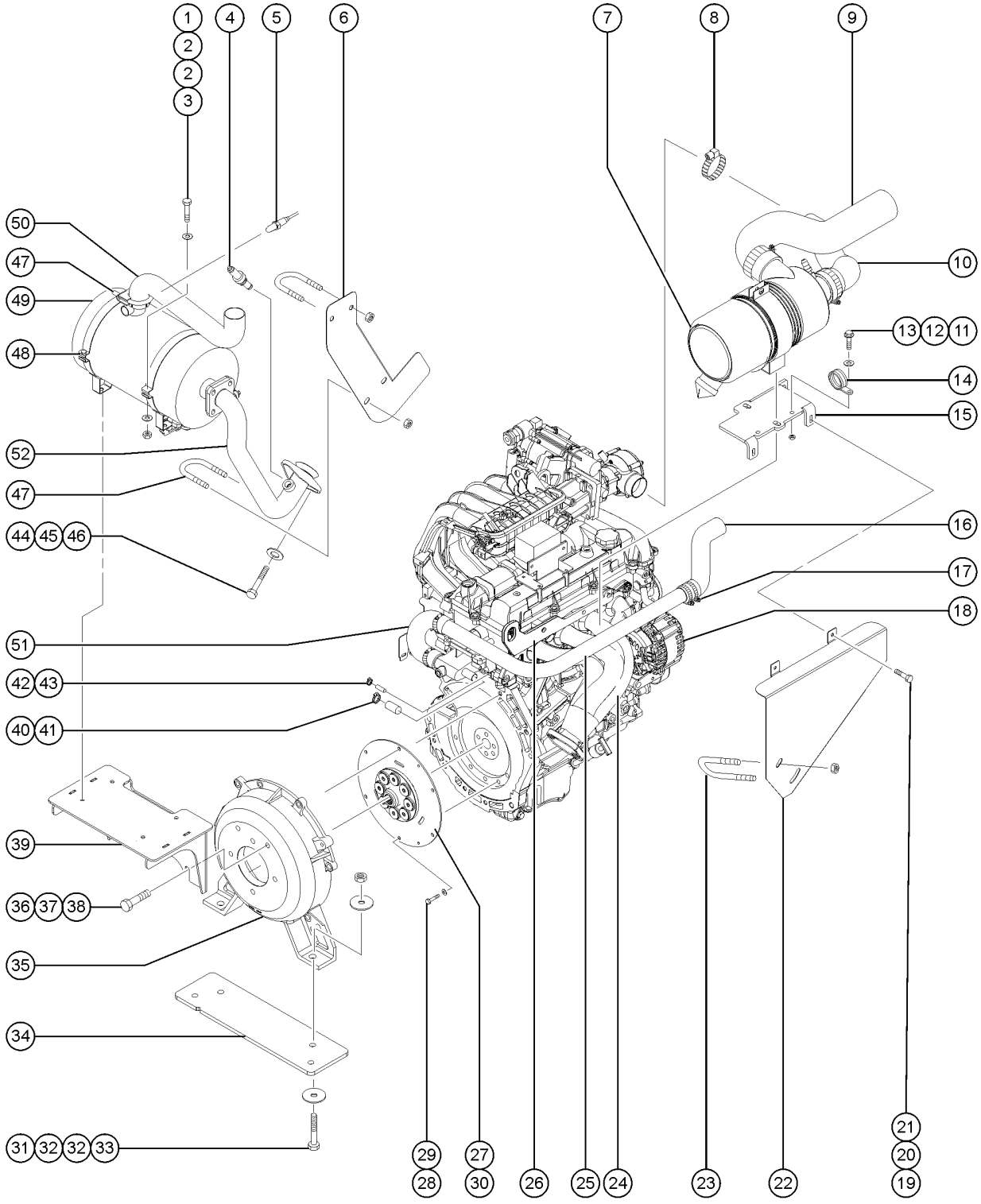

505.1 Ford DSG-423 Engine - View 3 (to SN 24508)

Item	*Part No.*	*Description*	*Qty.*
49	111666GT	WELDMENT,MUFFLER,DSG423	1
50	119234GT	TAILPIPE,FORD DSG423	1
51	110424GT	HOSE,RETURN,ENGINE	1
52	110407GT	WELDMENT,HEADER PIPE	1
52-	72343GT	GASKET,EXH FLANGE-FORD/PERKINS	

506.1 Ford DSG-423 Engine - View 4 (to SN 24508)

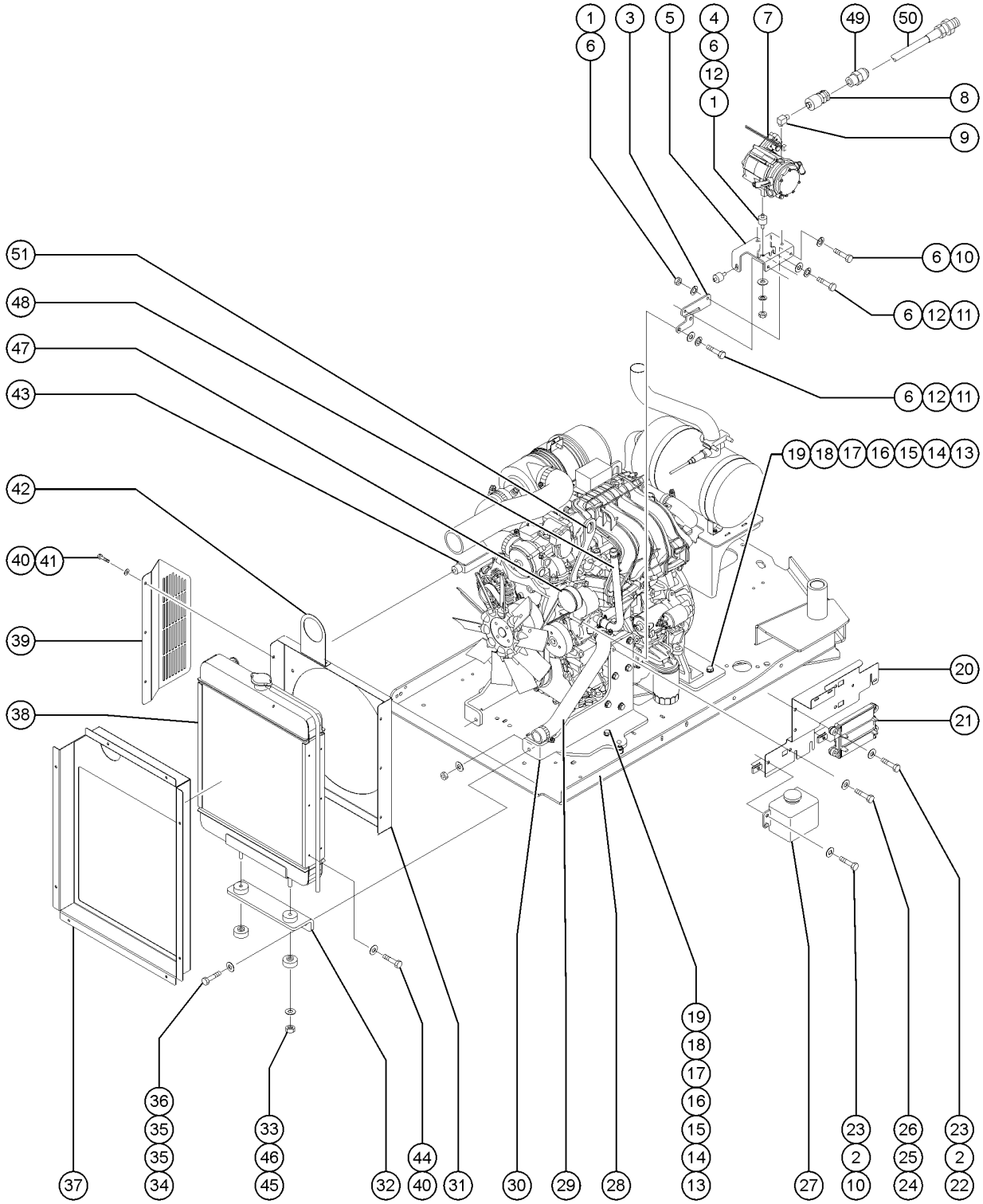

506.1 Ford DSG-423 Engine - View 4 (to SN 24508)

Item	Part No.	Description	Qty.
		The Ford DSG-423 is not available for the S-60TX and the S-65TX	
1	25368GT	NUT,NYLOCK,M8X1.25	
2	6638GT	WASHER, FLAT, USS, 1/4"Y	
3	110892PGT	BRACKET,REGULATOR SUPPORT,PNTD	1
4	110919GT	ISOLATOR,VIBRATION,M8 M/M	4
5	110890PGT	FORMING,REGULATOR MOUNT,PTD	1
6	33277GT	WASHER,FLAT,M8,YELLOW ZINC	
7	119826GT	REGULATOR,LPG,DSG-423	1
7-	119546GT	KIT,FITTING,REGULATOR DSG-423	
7A	102119GT	HOSE,3/4,LP from regulator to mixer	8 inches
8	119232GT	LOCKOFF,LP,FORD DSG/MSG	1
9	19363GT	ELBOW,130239-4-4	1
10	75159GT	SCREW,HHC,M8X1.25X 25MM,GR8.8	
11	49386GT	SCREW,HHC,M8 X 40	
12	49408GT	WASHER, LOCK, M8	
13	10598GT	SCREW,HHC,1/2-13 X 3	
14	6095GT	WASHER,FLAT,USS,1/2",Y	
15	70452GT	ISOLATOR,ENGINE VIBRATION	4
16	101730GT	SPACER,ENGINE MOUNT	4
17	101729GT	WASHER,VIBRATION ISOLATING	4
18	24040GT	WASHER, 1/2 PLATE (1/2 X 2.25 X 3/16)	
19	6198GT	NUT, NYLOCK, 1/2-13	
20	112283GT	FORMING,FORD GCP MOUNT	1
21A	119169GT	CONTROL MODULE,DSG-423 to SN 21072 (models with YELLOW fuel injectors)	1
21B	T112018GT	CONTROL MODULE,DSG-423 from SN 21073 (models with BLACK fuel injectors)	
22	6145GT	SCREW, HHC, 1/4-20 X 1.5	
23	56912GT	SPRING CLIP,1/4-20,.025-.15X.54,ZAG	

506.1 Ford DSG-423 Engine - View 4 (to SN 24508)

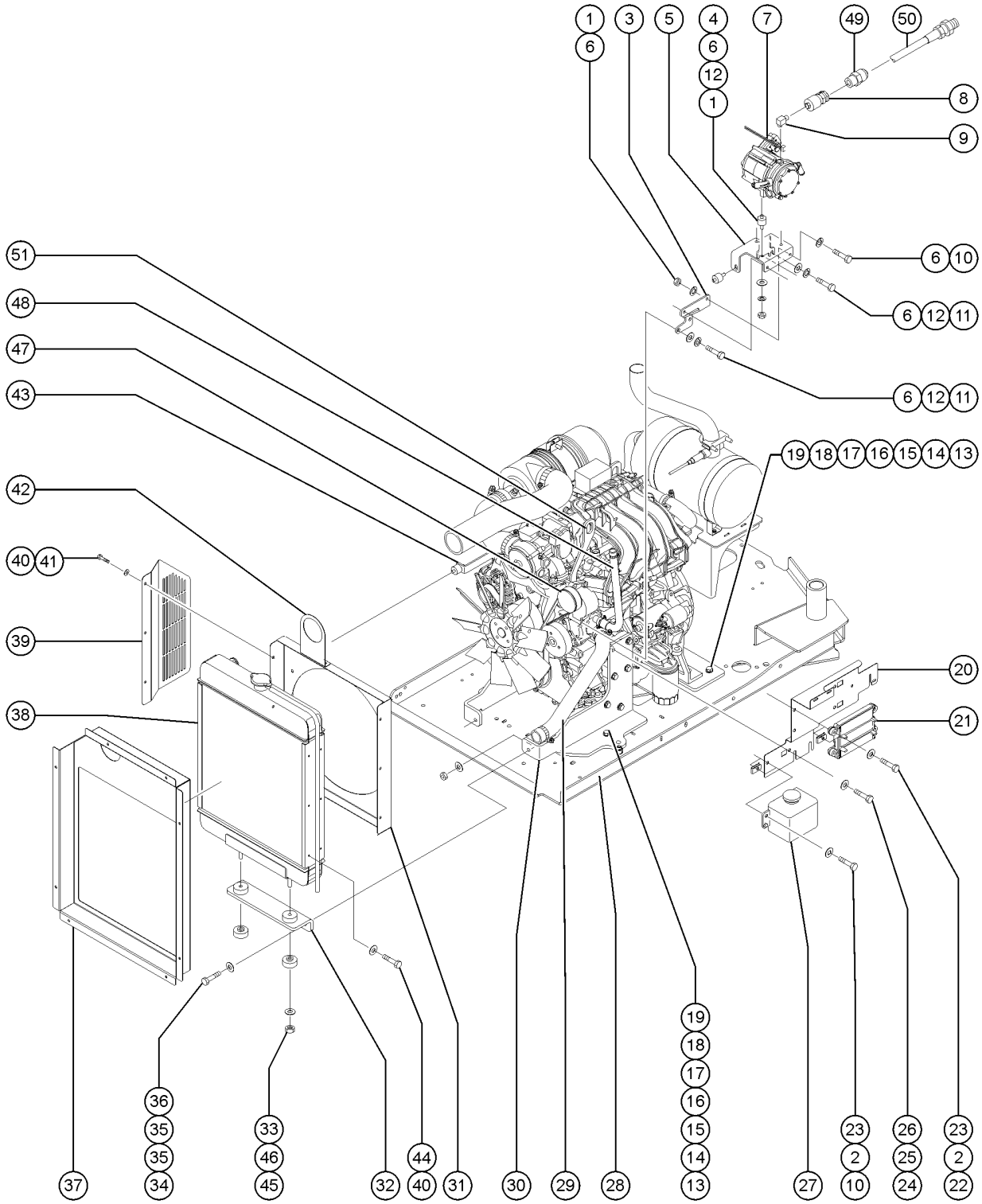

506.1 Ford DSG-423 Engine - View 4 (to SN 24508)

Item	Part No.	Description	Qty.
24	25927GT	SCREW,HHC,3/8-16X1.25,8,ZAG	
25	22700GT	WASHER,LOCK,M10	
26	22699GT	WASHER, FLAT, M10, ZINC PLTD.	
27	70367GT	BOTTLE,COOLANT RECOVERY,3.7***	1
27-	115431GT	CAP ASSY, COOLANT BOTTLE	
27-	106226-4000GT	TUBING, VINYL, 1/2" CLEAR	
27-	21465GT	CLAMP,HOSE, .25" TO .63" X .3125"	
28	101540GT	ENGINE TRAY ASSY W/BEARINGS	1
28-	35675GT	BEARING,FL,1.25IDX1.5ODX1.25L	
29	110423GT	HOSE,LOWER RADIATOR	1
29-	119053GT	CLAMP,HOSE,1.50	2
30	110416GT	FORMING,LEFT ENGINE SUPPORT	1
30-	110414GT	FORMING,RIGHT ENGINE SUPPORT	
31	110413GT	FORMING,FAN SHROUD	1
32	110417PGT	FORMING,RADIATOR SUPPORT,PNTD	1
33	24038GT	SHOCK MOUNT,SMALL	4
34	8516GT	SCREW, HCC, 3/8-16 X 1.50	
35	6097GT	WASHER, FLAT, USS, 3/8", Y	
36	4828GT	NUT, NYLOCK, 3/8-16	
37	110997GT	BAFFLE,RADIATOR,FORD	1
38A	110406GT	RADIATOR,FORD DSG423 & MSG425	1
38B	131589GT	HOSE,OVERFLOW,RADIATOR	1
38C	65473GT	CAP,RADIATOR,PERKINS/FORD	
39	111341GT	FORD TIII FAN GUARD W/DECALS	1
40	21019GT	SCREW,PHIL,PHM,10-24 X.5,SEMS	
41	6146GT	WASHER,FLAT,MS,#10,Y	
42	110995GT	GUIDE,HOSE,FORD	1
43	110419GT	FORMING,RADIATOR BRACE LEFT	1

506.1 Ford DSG-423 Engine - View 4 (to SN 24508)

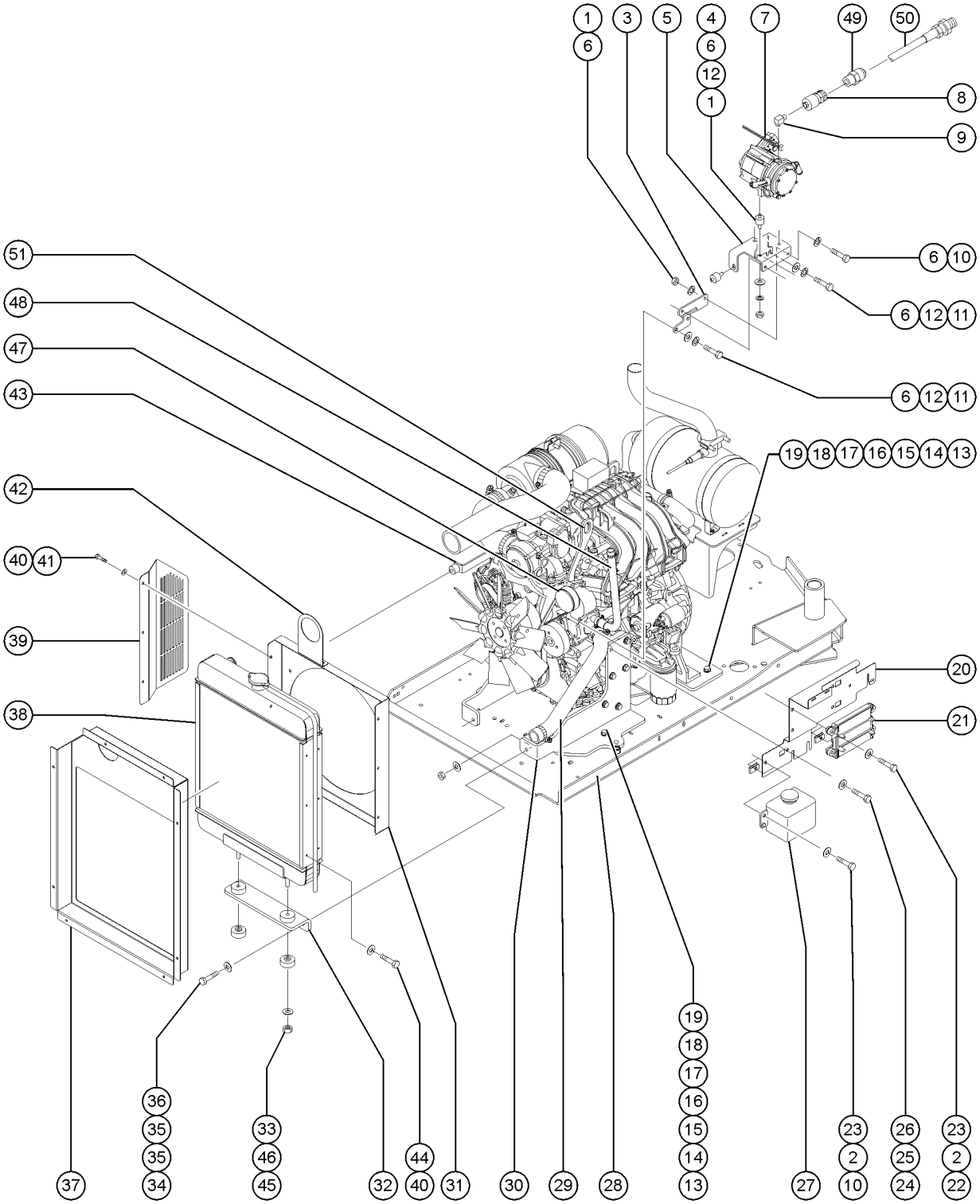

506.1 Ford DSG-423 Engine - View 4 (to SN 24508)

Item	Part No.	Description	Qty.
43-	219437GT	ISOLATOR,VIBRATION	
43-	18503GT	NUT, LOCKING - LG FLANGE 5/16 - 18	
44	25926GT	WASHER,FLAT,M6 PLTD.	
45	48425GT	NUT,FLG-LRG,3/8-16,YZ	
46	15086GT	WASHER,FLAT,.375 X 1.5 X .125	
47	215298GT	UPPER IDLER PULLEY, MSG425	
47-	119477GT	IDLER BRACKET	
48	119073GT	HOSE,COOLANT,REG INTAKE	1
48-	119053GT	CLAMP,HOSE,1.50	
49	19358GT	CONNECTOR,010102-6-4	
50	119055GT	HOSE ASSY,LP GAS	
51	112400GT	PLATE,FRONT LIFTING EYE	1

507.1 Deutz TD2011-L04i Engine - View 1

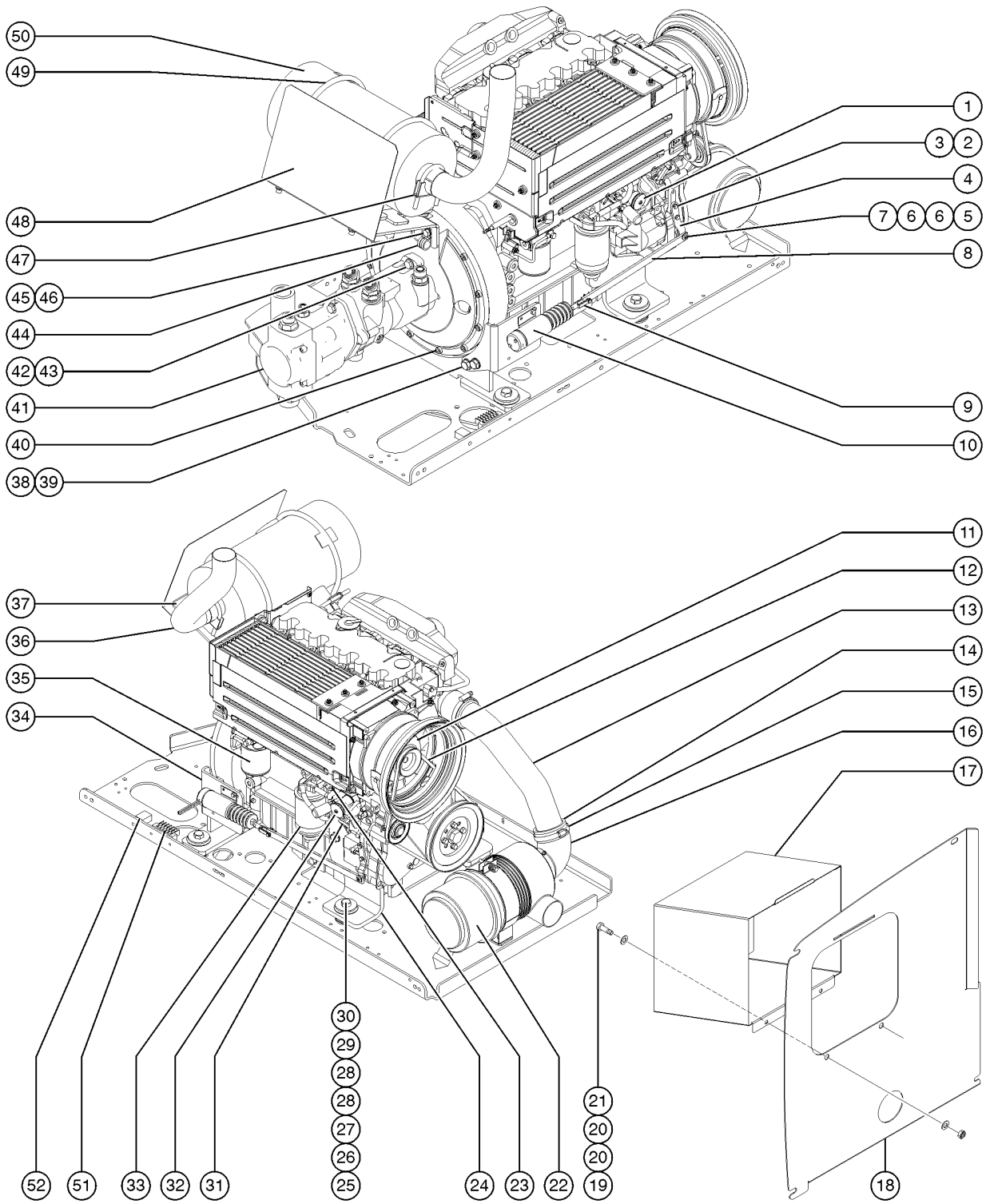

507.1 Deutz TD2011-L04i Engine - View 1

Item	Part No.	Description	Qty.
B-	T114678GT	SHUTDOWN SOLENOID,12V, DEUTZ (must order cable assembly, 58256, if replacing 32752) (includes o-ring)	1
C-	58256GT	SOLENOID CABLE ASSY***	
D-	72255GT	CONNECTOR, DEUTZ FUEL SHUTOFF* (does not include diode, 45782)	
E-	56445GT	DIODE,6 AMP 200 PIV,REEL	
1	111668GT	PUMP,FUEL 2011 DEUTZ ***	1
1-	27089GT	HOSE,5/16 FUEL,SAE 30R7	
1-	111402GT	O-RING, FUEL LIFT PUMP	
1-	30490GT	HOSE,1/4 FUEL LINE,SAE 30R7	
2	22578GT	SCREW,HHC,M6 X 20MM,GR8.8	
3	49407GT	WASHER,LOCK,M6	
4	50787-SGT	LEVER, GOVERNOR ACTUATOR	1
5	6584GT	SCREW,SHS,10-24 X .625	1
6	6638GT	WASHER, FLAT, USS, 1/4"Y	2
7	5365GT	NUT,NYLOCK,10-24	1
8	139322GT	THROTTLE LINKAGE, DSL	1
9	21130GT	CLEVIS YOKE-1/4-28,PLTD W/PIN includes clevis pin and cotter pin	1
10	121615GT	THROTTLE SOLENOID ASSY, TROMB.	1
10-	128829GT	CIRCUIT BRKR 15A TYPE 2 METAL	
11	58249GT	ALTERNATOR, DEUTZ,BF4L2011***	1
11-	1280590GT	PULLEY,ALTERNATOR,DEUTZ BF4L2011 for 58249	
11-	1280591GT	SPACER,ALT PULLEY,DEUTZ BF4L2011 for 58249	
12	58630GT	V-BELT, DEUTZ TD2011LOAI	1
13	102227GT	TUBE,AIR INTAKE	1
14	88064GT	REDUCER,3" TO 2.75"	1
15	30489GT	CLAMP,HOSE,3.50	4
16	139455GT	ELBOW,AIR INTAKE,RUBBER	
17	128896GT	WELDMENT, AIR INTAKE BOX	1
18	110183PGT	BAFFLE,AIR INTAKE S60 PAINTED	1

507.1 Deutz TD2011-L04i Engine - View 1

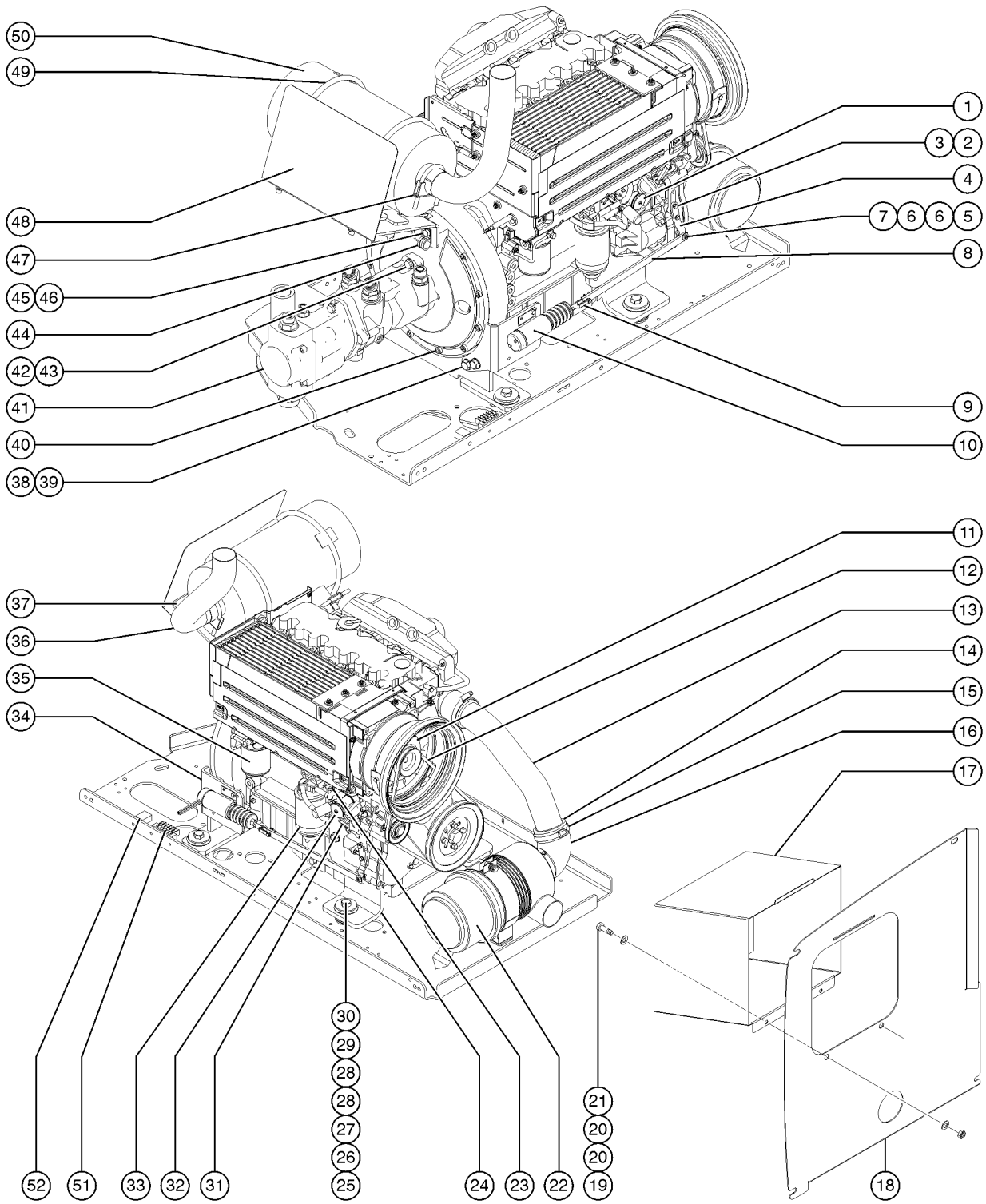

507.1 Deutz TD2011-L04i Engine - View 1

Item	Part No.	Description	Qty.
19	6175GT	SCREW,HHC,3/8-16 X 1	
20	5397GT	WASHER, FLAT, USS, 5/16-18	
21	4828GT	NUT, NYLOCK, 3/8-16	
22	81467GT	AIR CLEANER,NELSON	1
22-	75450GT	AIR CLEANER CLIPS, SUPERBOOM for 81467	
22-	75451GT	AIR CLEANER COVER, SUPERBOOM* for 81467	
22-	52866GT	EVACUATOR VALVE-AIR CLEANER for 81467	
22-	62425GT	FILTER,AIR CLEANER, SUPERBOOM for 81467	
22-	81468GT	MOUNTING BAND,AIR CLEANER	
23	111445GT	SENDING UNIT,OIL TEMP SWCH,DTZ	1
24	70455GT	FORMING,ENGINE MOUNT	
25	13003GT	SCREW,HHC,5/8-11 X 3.5 GRD.8	
26	33418GT	WASHER,FLAT,.625 X 2.25 X.15	
27	102045GT	ISOLATOR,ENGINE VIBRATION	
28	18596GT	WASHER,FLAT,1.56 X 2.5 X .061	
29	13064GT	WASHER,FLAT,.625 HARDENED	
30	6024GT	NUT,NYLOCK,5/8-11	
31	52352GT	DIPSTICK-F3L1011F (DEUTZ)	1
32	58299GT	SENDING UNIT,OIL PRESS.,DEUTZ*	1
33	29560GT	FILTER,FUEL/WTR SEP, DTZ 1008 Genie Genuine Part. See PN 1254826 for compatible aftermarket replacement.	1
33-	1254826GT	FUEL FILTER W/SEP,DEUTZ,1008 Genie Aftermarket Part. Filter for Deutz F3L 1011F Engine.	1
34	139321GT	FORMING, SOLENOID MOUNT***	1
35	49924GT	FILTER,OIL,DEUTZ Genie Genuine Part. See PN 1255653 for compatible aftermarket replacement.	1
35-	1255653GT	FILTER,OIL,DEUTZ,REPLACEMENT Genie Aftermarket Part. Compatible with Genie Genuine Part 49924	1
36	70465GT	TAILPIPE,DEUTZ BF4L2011	1
37	70448PGT	FORMING,MUFFLER MOUNT	1
38	22558GT	SCREW,HHC,M14 X 40MM,GR 8.8	
39	49411GT	WASHER,FLAT,M14	

507.1 Deutz TD2011-L04i Engine - View 1

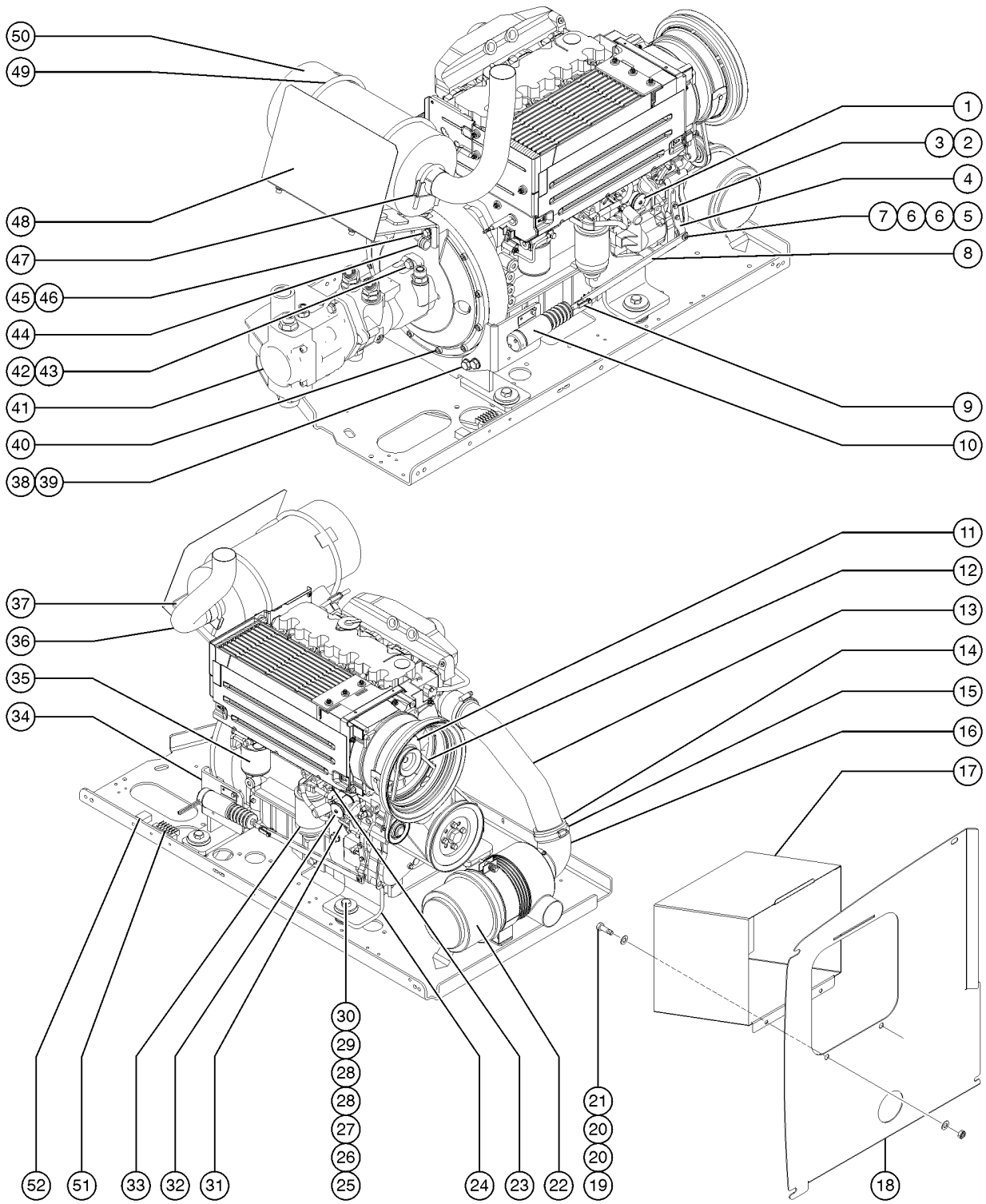

507.1 Deutz TD2011-L04i Engine - View 1

Item	Part No.	Description	Qty.
40	61110GT	SCREW,SHC,M10X1.5X30 GR 12.9	
41		Ref: Pumps refer to section 405.1	
42	8177GT	SCREW,HHC,1/2-13 X 1.5	
43	13066GT	WASHER,FLAT,.5 HARDENED	
44	60838GT	CLAMP, 1.00, #16 x 1/4, RUB CUSH	1
45	85053GT	SCREW,HHC,M10 X 1.5 X70,GR 8.8	
46	22699GT	WASHER, FLAT, M10, ZINC PLTD.	
47	71911GT	CLAMP,MUFFLER, 2.50 INCH	2
48	102237PGT	FORMING,HEAT SHIELD,MUFFLER	1
49	70449GT	U-BOLT,1/2-13 X 8.5	2
50A	70444GT	MUFFLER,2.5"INLET/OUTLET	1
50B	119117GT	MUFFLER,CAT/SPARK,DEUTZ spark arrest option	
50C	29559GT	GASKET,EXHAUST for 119117, 3 required	3
51	89997GT	RELAY MODULE(89996,89998)	1
52	128829GT	CIRCUIT BRKR 15A TYPE 2 METAL	1

508.1 Deutz TD2011-L04i Engine - View 2

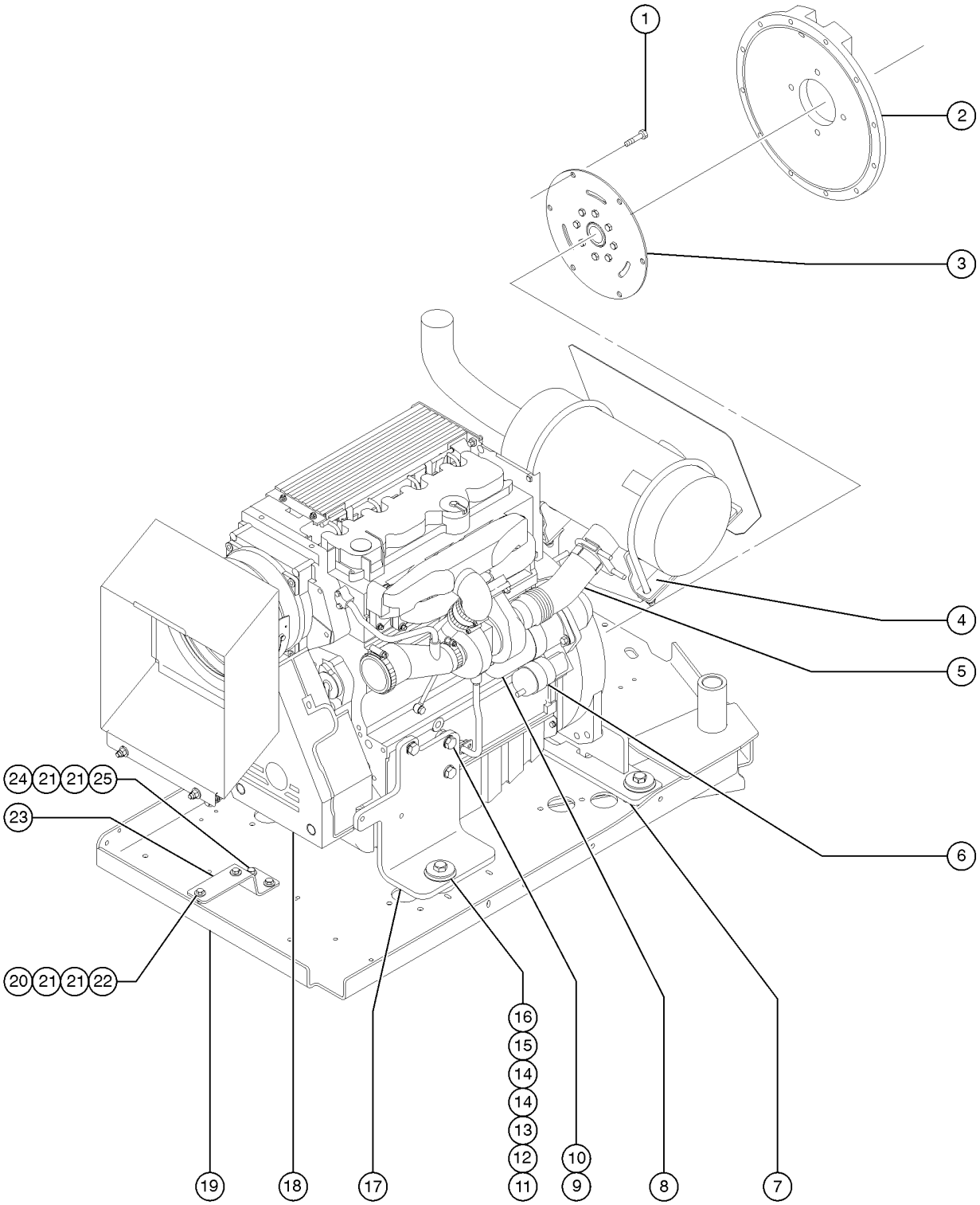

Item	Part No.	Description	Qty.
A-	102581GT	PUMP,FUEL INJ,DEUTZ BF4L20 class A injection pump; provide SN of engine to service to get correct injection pump (A, B, C, D)	
B-	T108732GT	PUMP,FUEL INJ,DEUTZ BF4L20 class B injection pump; provide SN of engine to service to get correct injection pump (A, B, C, D)	
C-	T108733GT	PUMP,FUEL INJ,DEUTZ BF4L20 class C injection pump; provide SN of engine to service to get correct injection pump (A, B, C, D)	
D-	T108734GT	PUMP,FUEL INJ,DEUTZ BF4L20 class D injection pump; provide SN of engine to service to get correct injection pump (A, B, C, D)	
1	62476GT	SCREW,SHC,M10X1.5X20MM (75090)	
2	70381GT	COVER,FLYWHEEL CASTING	1
3	128004GT	COUPLER,15 TOOTH,FBA,SAE8***	
4	70483GT	FORMING,8.5' MUFFLER MOUNT	1
5	70445GT	FLEX PIPE,EXHAUST,2.5" DIA	1
5B	71911GT	CLAMP,MUFFLER, 2.50 INCH	
5B	139983GT	EXHAUST PIPE GASKET	
6	49915GT	SOLENOID-STARTR DEUTZF4L1011F*	1
7	70456GT	WELDMENT,REAR ENGINE MOUNT	1
8	139709GT	STARTER, 12V	1
9	22558GT	SCREW,HHC,M14 X 40MM,GR 8.8	
10	49411GT	WASHER,FLAT,M14	
11	13003GT	SCREW,HHC,5/8-11 X 3.5 GRD.8	4
12	33418GT	WASHER,FLAT,.625 X 2.25 X.15	
13	102045GT	ISOLATOR,ENGINE VIBRATION	4
14	18596GT	WASHER,FLAT,1.56 X 2.5 X .061	
15	13064GT	WASHER,FLAT,.625 HARDENED	4
16	6024GT	NUT,NYLOCK,5/8-11	
17	70454PGT	FORMING,ENGINE MOUNT PAINTED	1
18	146061GT	V-BELT GUARD, DEUTZ 2011	1
19		Ref: Engine Tray with Bearing refer to section 304.1	
20	13002GT	SCREW,HHC,5/16-18 X 1 GR5	
21	5397GT	WASHER, FLAT, USS, 5/16-18	

508.1 Deutz TD2011-L04i Engine - View 2

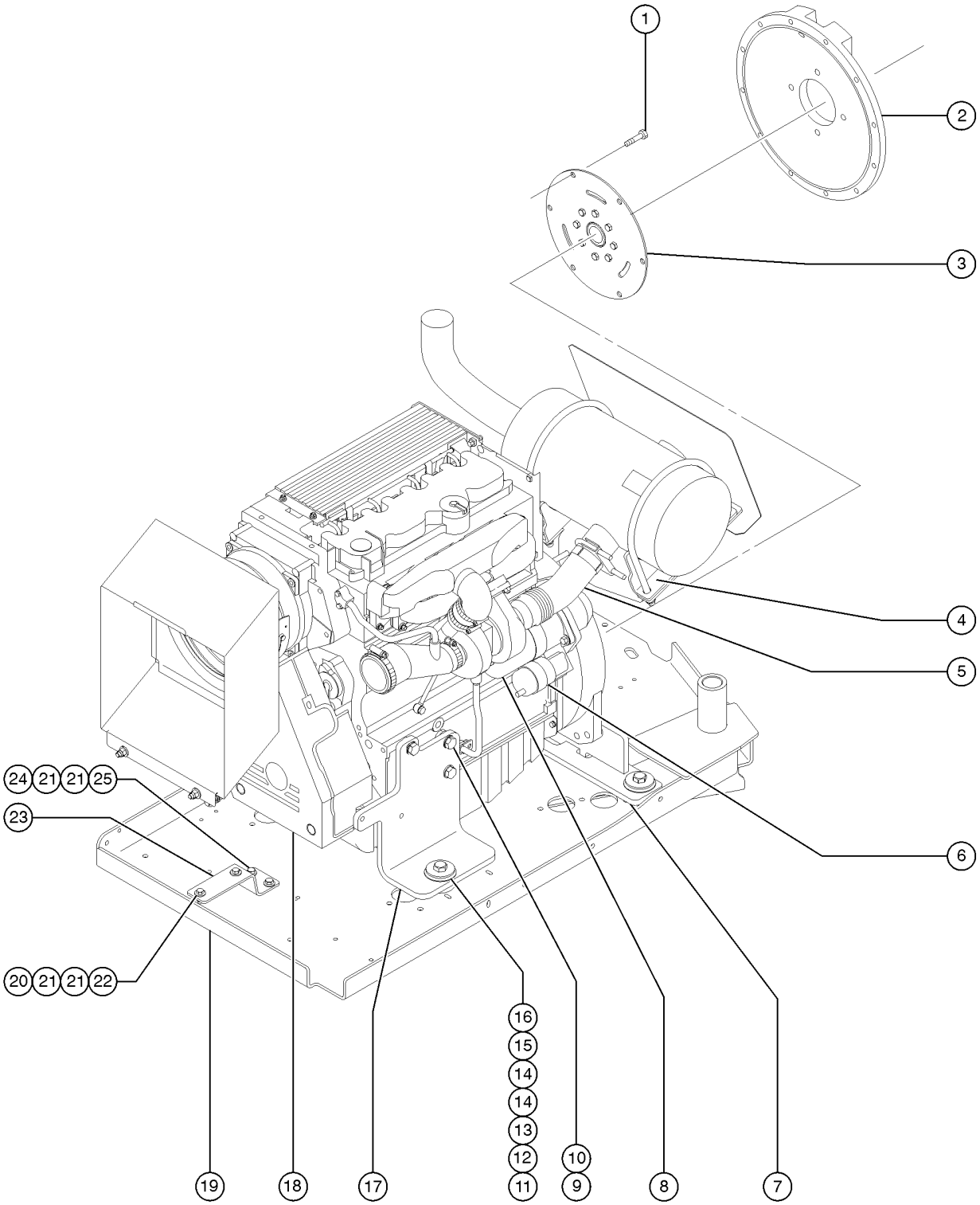

508.1 Deutz TD2011-L04i Engine - View 2

Item	Part No.	Description	Qty.
22	6782GT	NUT, NYLOCK, 5/16-18	
23	102209PGT	FORMING,AIR CLEANER MOUNT PNTD	1
24	6019GT	SCREW,HHC,3/8-16 X 1.25 GRD 5	
25	4828GT	NUT, NYLOCK, 3/8-16	

509.1 Ford MSG-425 EFI Engine - View 1 (from SN 24509)

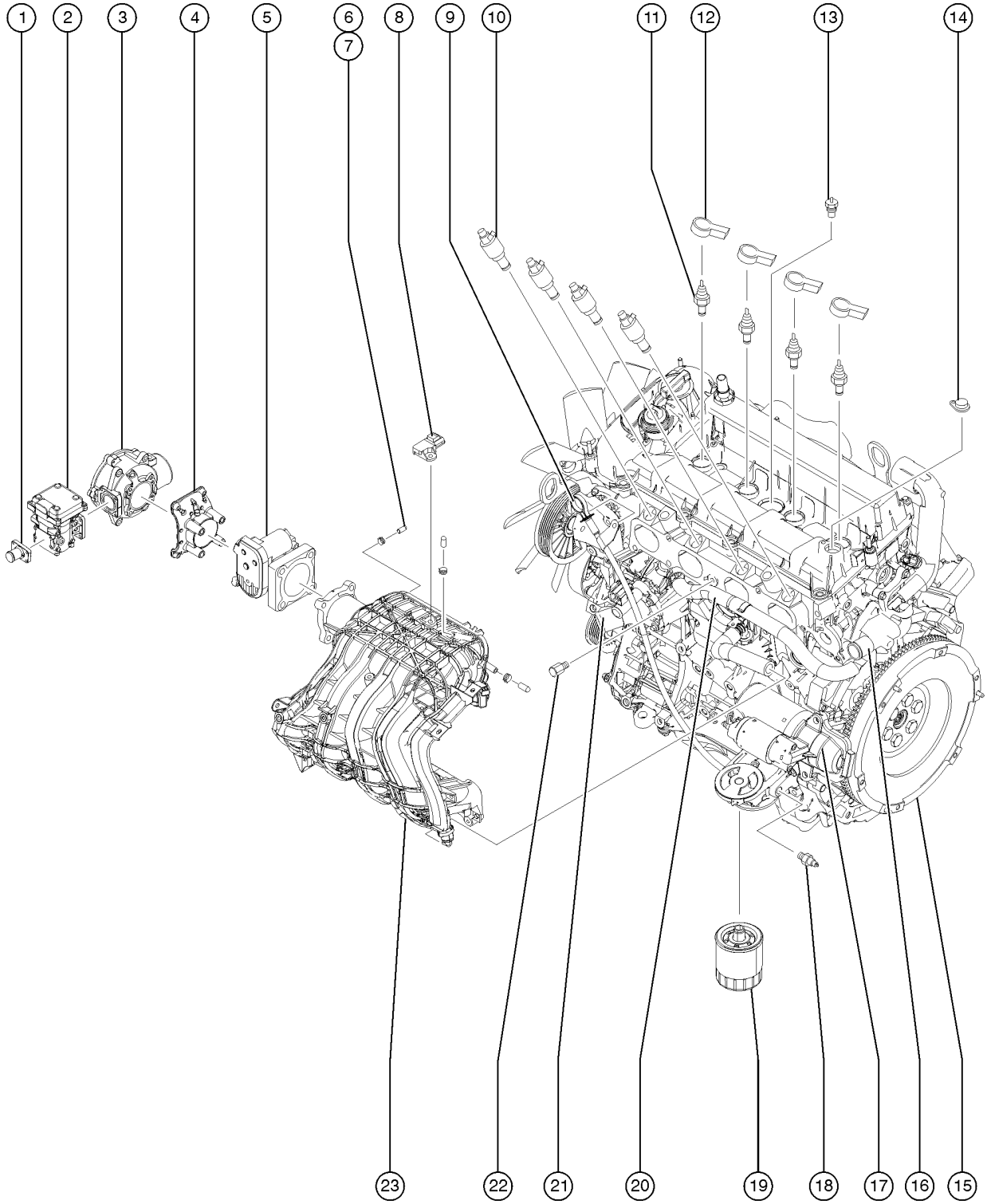

509.1 Ford MSG-425 EFI Engine - View 1 (from SN 24509)

Item	Part No.	Description	Qty.
-	128165GT	RELAY,PWR/FUEL,FORD DSG423	
-	128166GT	RELAY,STARTER,FORD DSG/MSG	
-	215294GT	ENGINE HARNESS, MSG425	1
-	215295GT	SOLENOID, VAR. TIM, MSG425	
1	215285GT	FITTING, DEPR LP, MSG425 (sold seperately) (for 215284)	1
2	215284GT	REGULATOR,LP PRESSURE,MSG425	1
2-	215286GT	FITTING, DEPR COOLANT, MSG425 (sold seperately) (for 215284)	
3	215280GT	MIXER, MSG425	1
3-	1313038GT	INLET SEAL, MIXER, MSG425 (215280)	
3-	1313039GT	O-RING, MIXER, MSG425 (215280)	
3-	1313040GT	QUAD RING, MIXER, MSG425 (215280)	
3-	119546GT	KIT,FITTING,REGULATOR DSG-423 for 215280	
3-	215281GT	O-RING, SMOOTH, MSG425	
3-	215282GT	O-RING, RIBBED, MSG425	
4	215283GT	ADAPTER, MIXER/THRO, MSG425	1
5	88451GT	THROTTLE ACTUATOR*(BOSCH)	1
5-	88452GT	GASKET,THROTTLE ACTUATOR***	
6	217820GT	CAP, INT. MFLD. VAC, MSG425	2
7	119568GT	CLAMP,SPRING,1/2"	3
8	119475GT	MAP SENSOR, DSG-423	1
8-	119965GT	COVER,DUST,IDLER,FORD DSG423	
9A		Ref. OIL INDICATOR, MSG425 Previous dipstick part 215297 is no longer available; customers before SN 13-25377 must order kit 220229 for first time replacement	1
9B	220229GT	KIT, DIPSTICK, MSG425 to SN 13-25376	
9C	220230GT	DIPSTICK, MSG425 from SN 13-25377	
9C-	220231GT	O-RING,DIPSTICK,MSG425 (not shown, use with dipstck part 220230)	
9C-	18506GT	SCREW 5/16-18 X .75 LG.FLG.LCK. (not shown, use to mount dipstck part 220230)	
9C-	6638GT	WASHER, FLAT, USS, 1/4"Y (not shown, use to mount dipstck part 220230)	
9C-	6002GT	NUT, LP NYLOCK, 5/16-18 (not shown, use to mount dipstck part 220230)	

509.1 Ford MSG-425 EFI Engine - View 1 (from SN 24509)

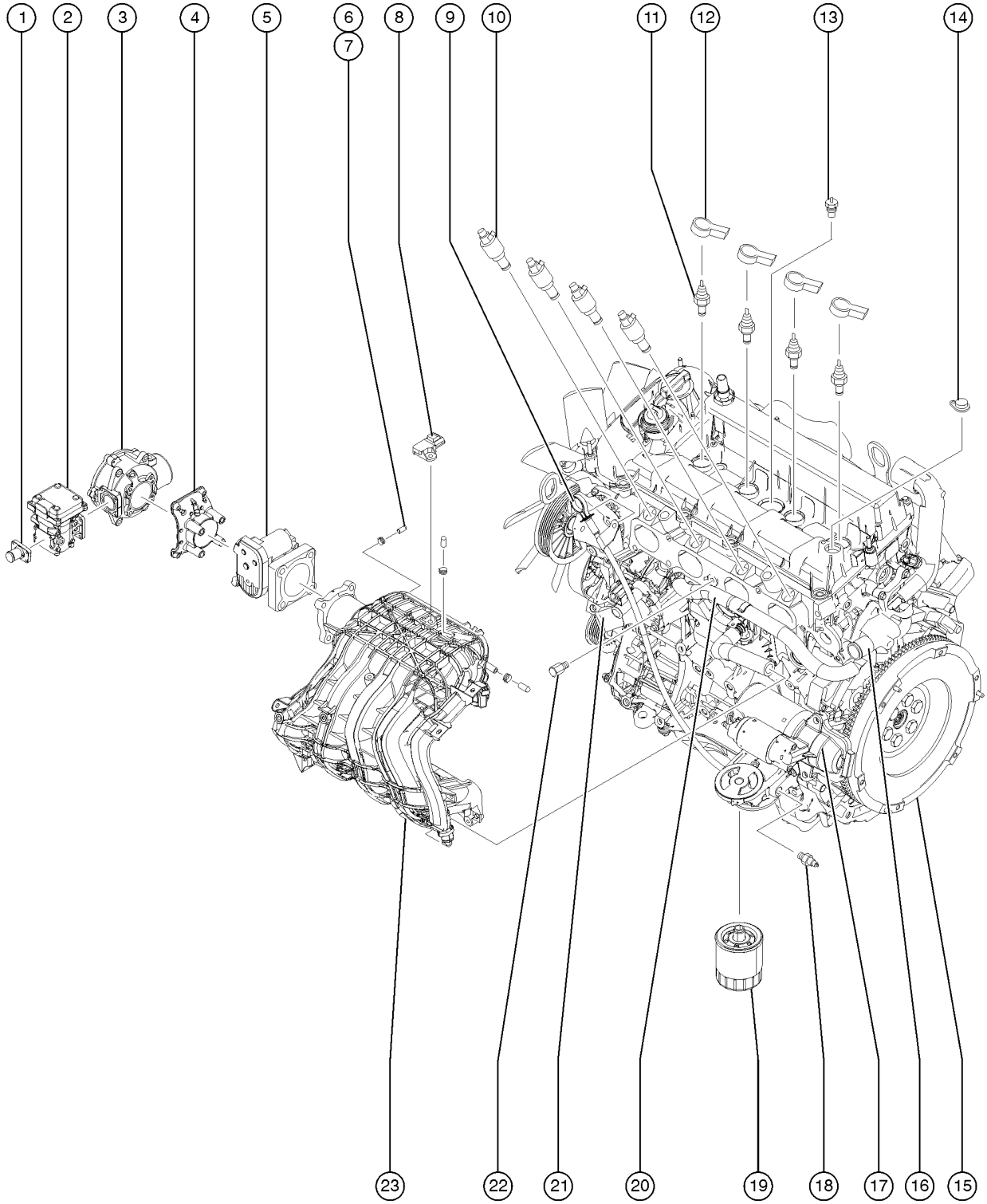

509.1 Ford MSG-425 EFI Engine - View 1 (from SN 24509)

Item	Part No.	Description	Qty.
10	215299GT	INJECTOR, FUEL, MSG425	4
11	215287GT	SPARK PLUG, MSG425	4
12	215314GT	COIL ASSY, MSG425	4
13	215300GT	SENSOR, CYL. HEAD TEMP, MSG425	1
14	215308GT	SENSOR, CAM POS, MSG425	1
15	215278GT	FLYWHEEL ASSY, MSG425	1
16	215275GT	ADAPTER, WATER CONN, MSG425	1
17A	1264894GT	KIT, HD STARTER INSTALL, MSG-4	1
17B	128166GT	RELAY,STARTER,FORD DSG/MSG for 215293	
17C	217823GT	STARTER PLUG SEAL, MSG425 for 215293	
18	215301GT	SWITCH, OIL PRES, MSG425	1
19	119139GT	OIL FILTER,DSG-423	1
19A	1277968GT	SEPERATOR ASSY,OIL,FORD MSG	1
20	215302GT	HOSE, COOLANT BYPASS, MSG425	1
21	215310GT	THERMOSTAT W/HOUSING, MSG425	1
22	215309GT	SENSOR, KNOCK, MSG425	1
23	215305GT	INTAKE MANIFOLD, MSG425	1
23A	1277969GT	GASKET,INTAKE MANIFOLD,MSG 425 for 215305	1

510.1 Ford MSG-425 EFI Engine - View 2 (from SN 24509)

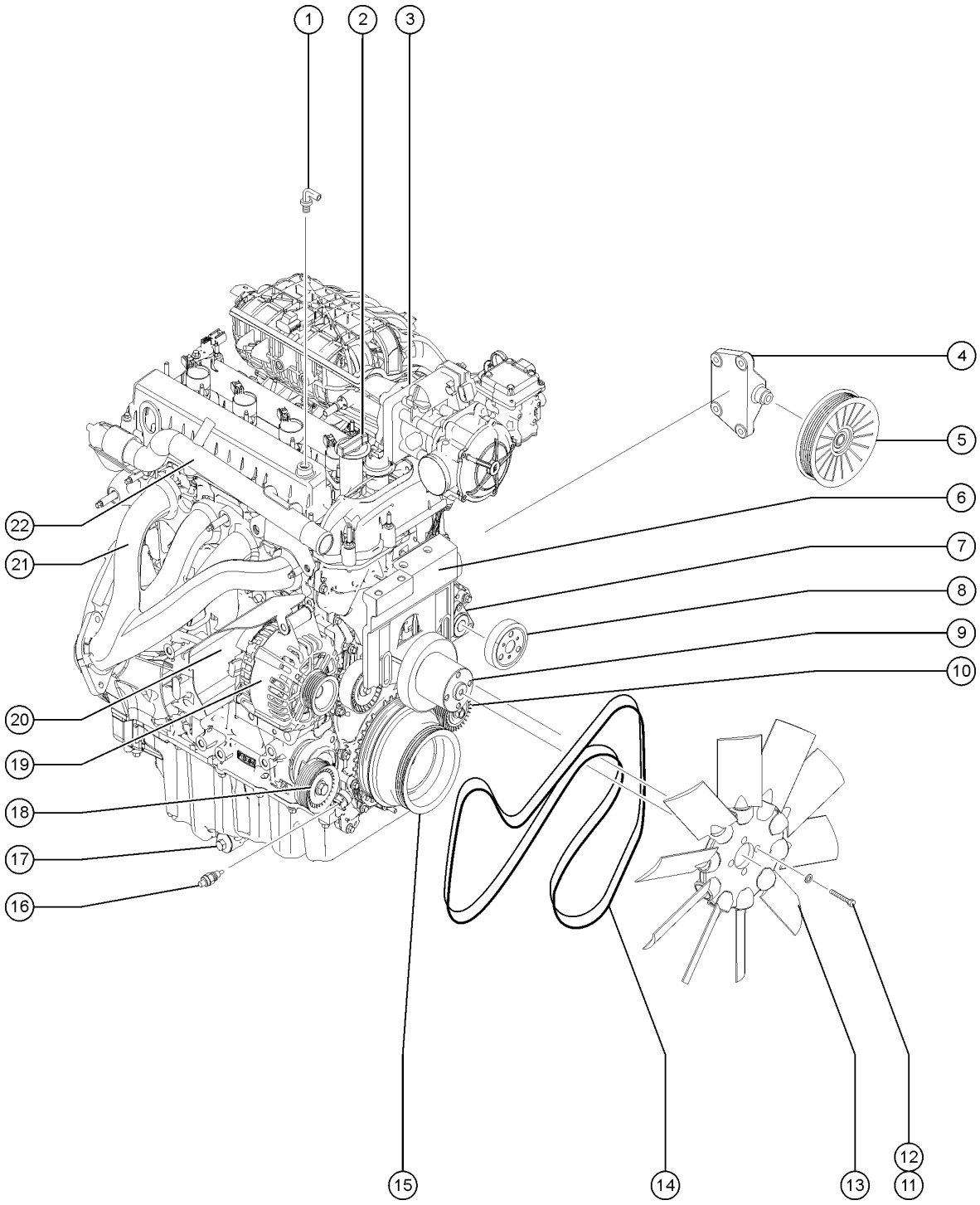

510.1 Ford MSG-425 EFI Engine - View 2 (from SN 24509)

Item	Part No.	Description	Qty.
1	119474GT	VALVE,PCV FORD DSG-423	1
1-	75631GT	HOSE,AIR 3/8	
2	58632GT	CAP,OIL FILLER,FORD DSG 423	1
3	215279GT	PLATE, INT. MFLD ADAP, MSG425	
4	119477GT	IDLER BRACKET	1
5	215298GT	UPPER IDLER PULLEY, MSG425	1
6	1283575GT	KIT,FAN SUPPORT RETRO,FORD MSG For first time replacement	1
6-	1283571GT	BRACKET,FAN,FORD MSG included in kit 1283575GT	1
6-	1283572GT	BRACKET,IDLER,FORD MSG included in kit 1283575GT	1
6-	1283573GT	BOLT, BRACKET, SUPPORT,FORD MSG included in kit 1283575GT	2
6-	1283574GT	SCREW,HHC,M8X1.25.80 included in kit 1283575GT	1
7	215288GT	WATER PUMP, MSG425	1
8	215289GT	WATER PUMP PULLEY, MSG425	1
9	215271GT	FAN PULLEY, MSG425	1
9-	215270GT	FAN SPACER, MSG425	1
10	215313GT	LOWER IDLER PULLEY, MSG425	1
11	32309GT	SCREW,HHC,M8 X 60MM X 1.25	
12	49408GT	WASHER, LOCK, M8	
13	215269GT	FAN, MSG425	1
14	215291GT	BELT, FEAD, MSG425 (shown)	1
14-	215274GT	FAN DRIVE BELT, MSG425 Fan belt (not shown)	
15	215273GT	CRANK PULLEY, EXT, MSG425	1
16	215307GT	SENSOR, CRANK POS, MSG425	1
17	215311GT	PLUG, OIL DRAIN, MSG425	1
18	215290GT	PULLEY/TENSIONER, MSG425	1
19	1300536GT	ALTERNATOR,DSG-423,BOSCH	
20	227309GT	HEAT SHIELD,ALTERNATOR,FORD	1
21	215276GT	EXHAUST MANIFOLD, MSG425	1

510.1 Ford MSG-425 EFI Engine - View 2 (from SN 24509)

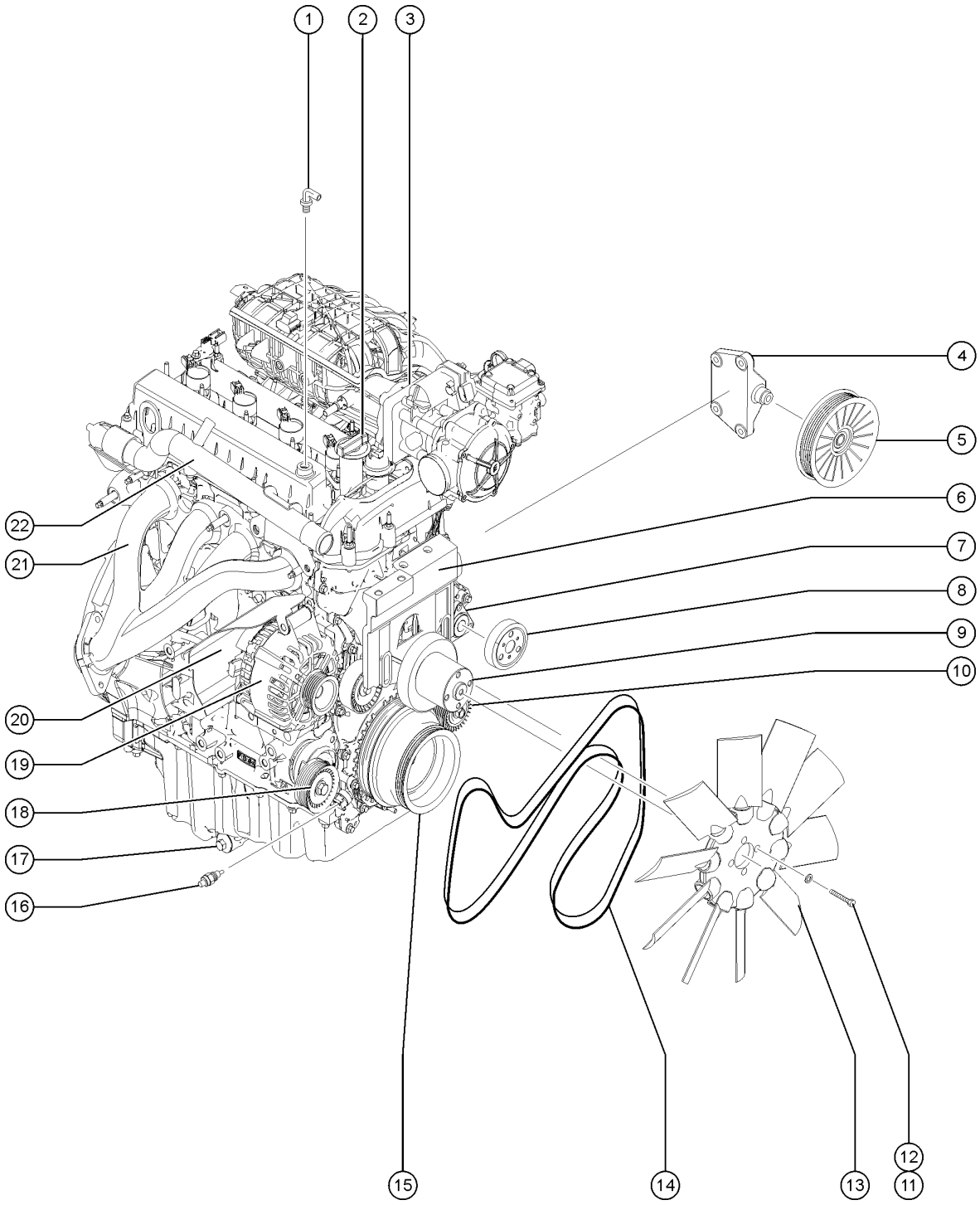

510.1 Ford MSG-425 EFI Engine - View 2 (from SN 24509)

Item	*Part No.*	*Description*	*Qty.*
21-	215277GT	GASKET, MSG425	
21-	217822GT	NUT, EXH. MANIFOLD, MSG425	
21-	823816GT	GASKET,EXHAUST,FORD MSG	
22	236373GT	PIPE,COOLANT RETURN, MSG425	1

511.1 Ford MSG-425 EFI Engine - View 3 (from SN 24509)

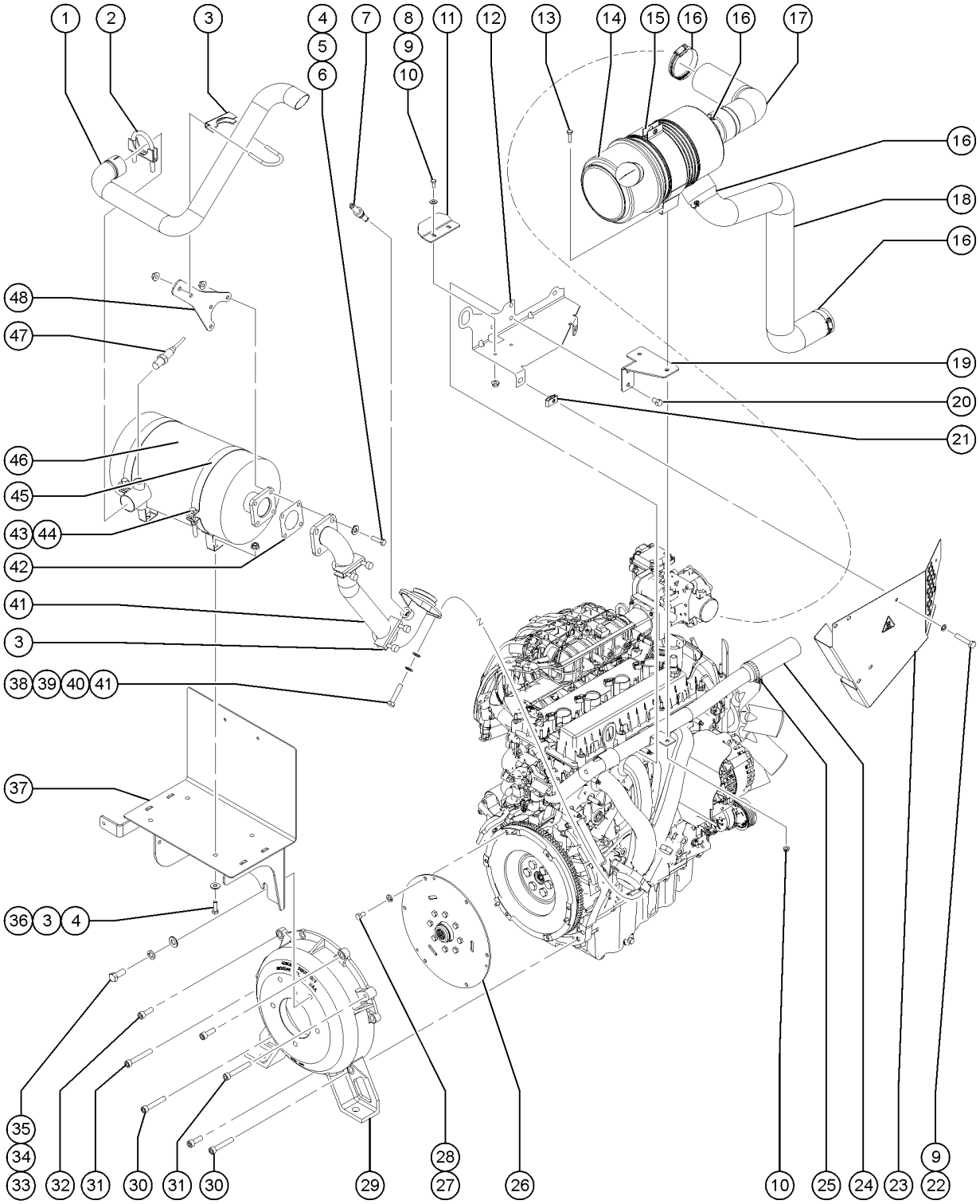

511.1 Ford MSG-425 EFI Engine - View 3 (from SN 24509)

Item	Part No.	Description	Qty.
1	237251GT	TAILPIPE, S60 MSG425	1
2	102121GT	CLAMP,MUFFLER,1-7/8 IN.	1
3	32064GT	CLAMP,MUFFLER,1.75 INCH	3
4	18503GT	NUT, LOCKING - LG FLANGE 5/16 - 18	
5	5397GT	WASHER, FLAT, USS, 5/16-18	
6	13000GT	SCREW,HHC,5/16-18 X 1.25	
7	215320GT	SENSOR, O2, MSG425	1
8	6090GT	SCREW, HHC, 1/4-20 X .75	
9	6638GT	WASHER, FLAT, USS, 1/4"Y	
10	18504GT	NUT,LOCKING-LG.FLANGE,1/4-20	
11	218742GT	FORMING,MFLD GUARD,MSG425 from SN 25543	1
12A	216368GT	FORMING,HEAT SHIELD MOUNT to SN 25542	1
12B	218668GT	FORMING, HEAT SHIELD MOUNT from SN 25543	1
13	6888GT	SCREW, HHC, 1/4-20 X 1	
14	111634GT	AIR CLEANER,FORD,T3	1
14-	111634GT	AIR CLEANER,FORD,T3	
14-	227988GT	VACUATOR VALVE	
14-	77295GT	FILTER ELEMENT,AIR,NOLFF LPG	
14-	58247GT	AIR CLEANER CAP/ FORD/NOLFF***	
14-	1277991GT	CLIP,AIR CLEANER COVER (58247) for 58247	
14-	38922GT	ELBOW,90DEG.1/8MPT-5/16 BARB	
15	53952GT	BRKT,AIR CLEANER ORIENTATION**	1
16	45435GT	CLAMP,HOSE,2.50"	4
17	237146GT	HOSE, CLEAN AIR, MSG425	1
18	235659GT	HOSE, RAW AIR, MSG425	1
19	216367GT	REF. FORMING,AIR CLEANER MOUNT	1
20	33681GT	SCREW,HHC,3/8-16 X .625	
21	56912GT	SPRING CLIP,1/4-20,.025-.15X.54,ZAG	

511.1 Ford MSG-425 EFI Engine - View 3 (from SN 24509)

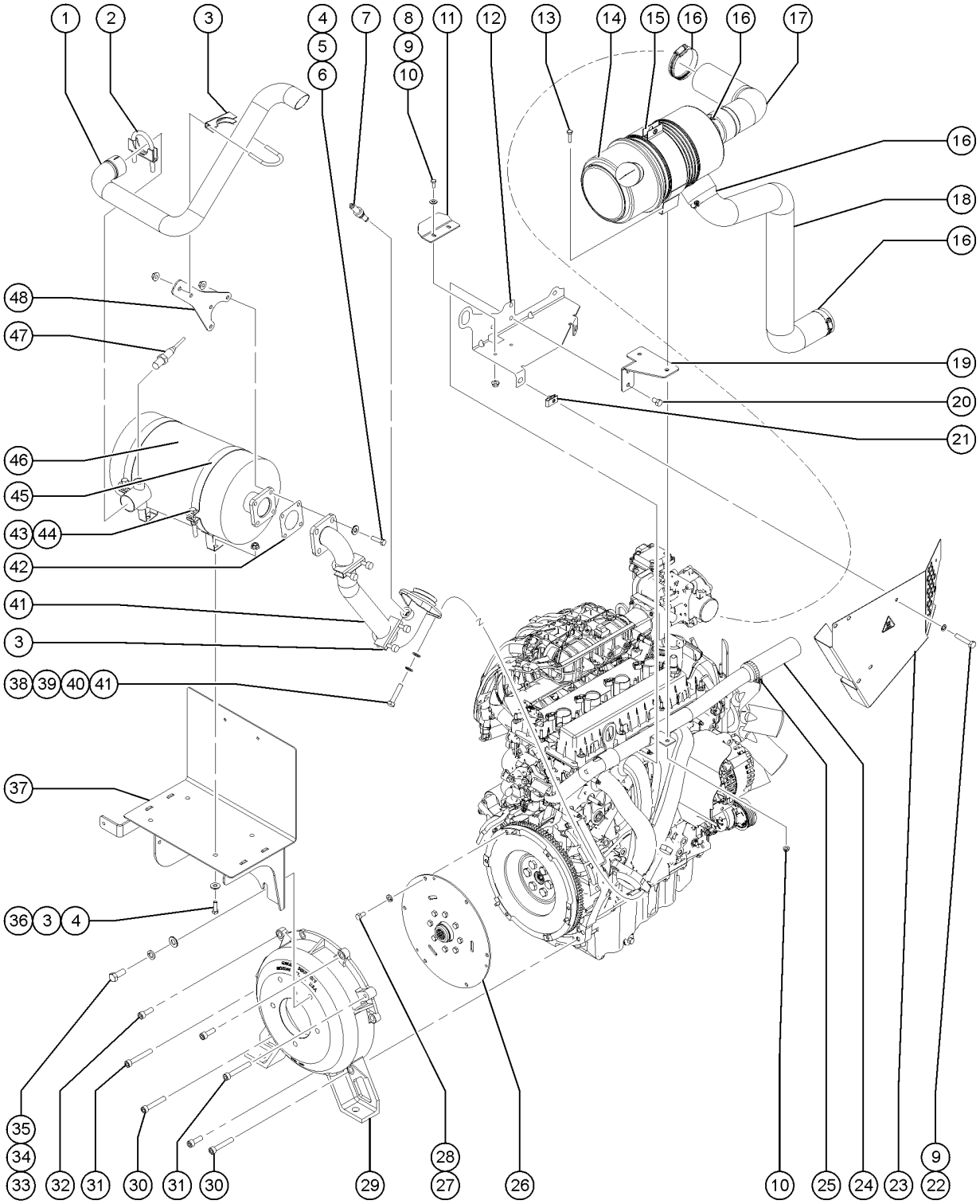

511.1 Ford MSG-425 EFI Engine - View 3 (from SN 24509)

Item	Part No.	Description	Qty.
22	7339GT	SCREW,HHC,1/4-20 X .5	
23A	236341GT	HEAT SHIELD, MSG425 to SN 25542	1
23B	160541GT	WDMT, HEAT SHIELD, MSG425 from SN 17959	
24	236338GT	HOSE, UPPER RADIATOR, MSG425	
25	36208GT	CLAMP,HOSE,1.25***	2
26	214446GT	COUPLER,15T,FBA,SAE 8,MSG425	1
27	49378GT	SCREW,HHC,M8 X 16	
28	6021GT	WASHER, LOCK, .375	
29	119052GT	PUMP MOUNT,FORD DSG423	1
30	111748GT	SCREW,SHC,M10X1.5 X 60 GR8.8	2
31	215544GT	SHCS, M10-1.5X70MM, CL12.9	2
32	61110GT	SCREW,SHC,M10X1.5X30 GR 12.9	3
33	10597GT	SCREW,HHC,1/2-13 X 1.25 GR5	
34	6033GT	WASHER,LOCK,0.5"	
35	13066GT	WASHER,FLAT,.5 HARDENED	
36	13002GT	SCREW,HHC,5/16-18 X 1 GR5	
37	215709GT	WELDMENT,CAT MOUNT,MSG425	1
38	128061GT	SCREW, HHC, M10 X 1.5 X 50	
39	22700GT	WASHER,LOCK,M10	
40	22699GT	WASHER, FLAT, M10, ZINC PLTD.	
41A	110407GT	WELDMENT,HEADER PIPE to SN 25542	1
41B	218576GT	WDMT,HEADER PIPE,MSG425 from SN 17959	
42	72343GT	GASKET,EXH FLANGE-FORD/PERKINS	1
43	14033GT	SCREW, HHC, 3/8-16 X 2.75	2
44	4828GT	NUT, NYLOCK, 3/8-16	
45	119051GT	MOUNTING BAND,MUFFLER,8.0"	2
46	215528GT	WDMT, CAT. MUFFLER, MSG425	1
47	139610GT	SENSOR,AIR,CAT MONITOR	1

511.1 Ford MSG-425 EFI Engine - View 3 (from SN 24509)

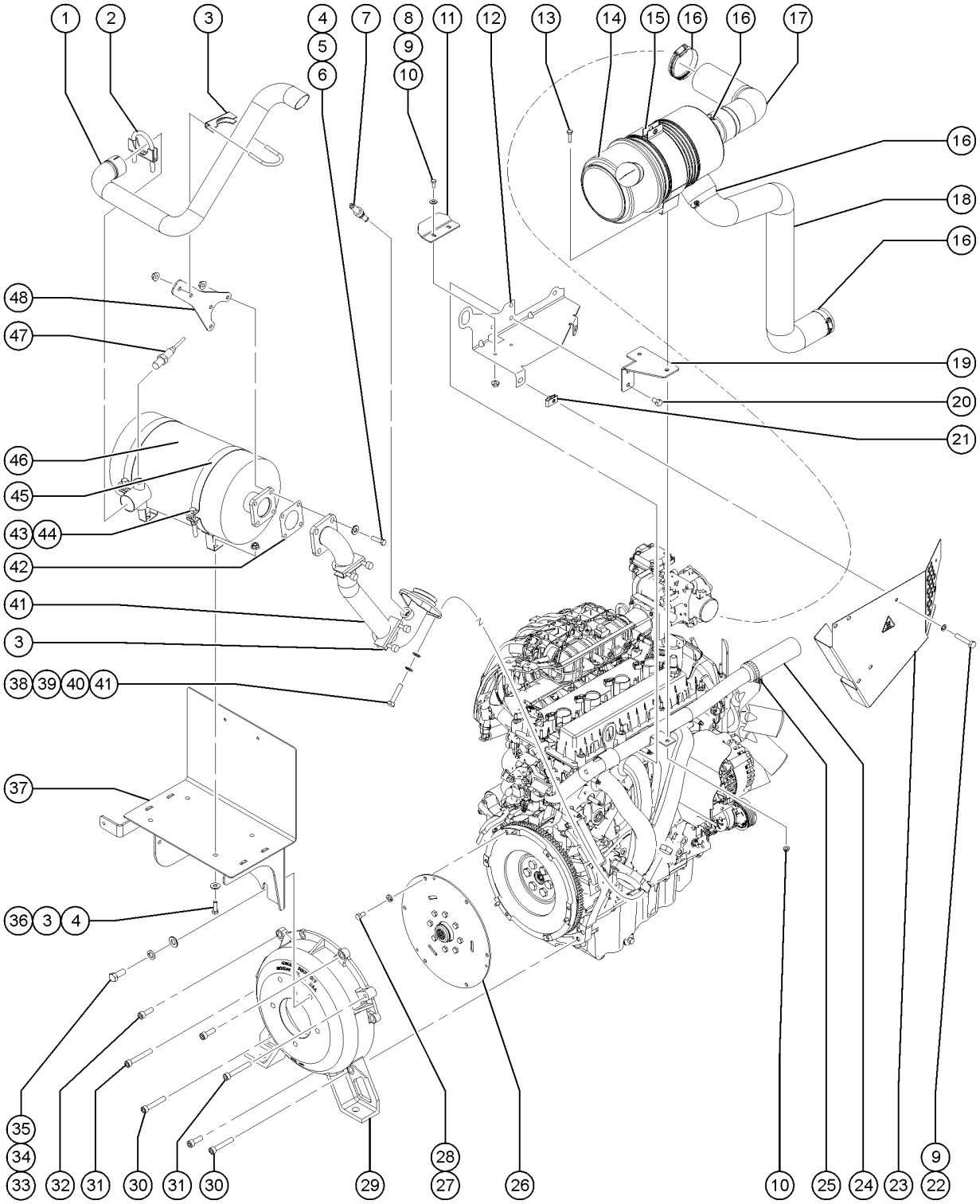

511.1 Ford MSG-425 EFI Engine - View 3 (from SN 24509)

Item	*Part No.*	*Description*	*Qty.*
48	236832GT	TAILPIPE MOUNT , S40 MSG425	1

512.1 Ford MSG-425 EFI Engine - View 4 (from SN 24509)

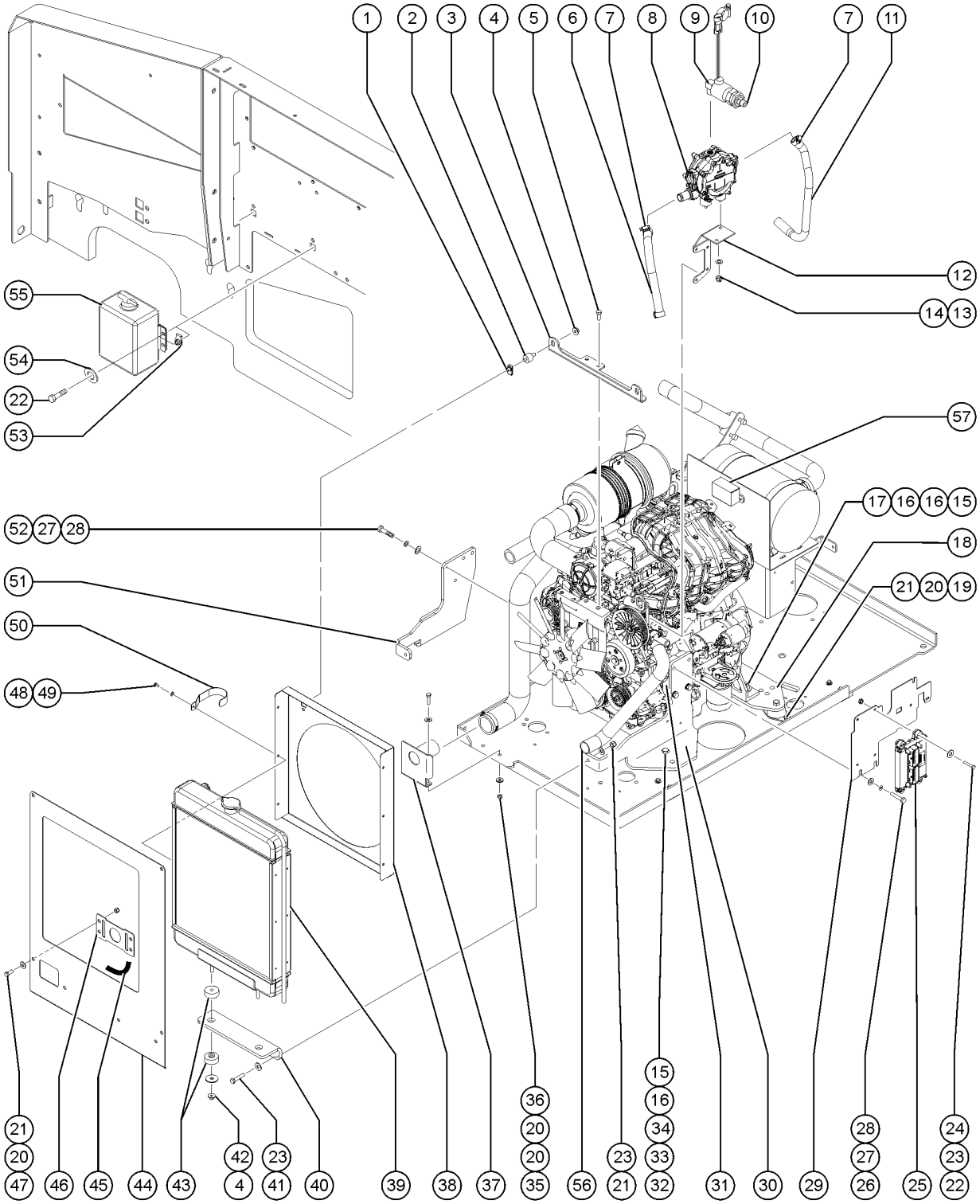

512.1 Ford MSG-425 EFI Engine - View 4 (from SN 24509)

Item	Part No.	Description	Qty.
1	36456GT	SPRING CLIP,5/16-18,.025-.15X.83,ZAG	2
2	219437GT	ISOLATOR,VIBRATION	2
3	237780GT	FORMING, RAD SUPPORT, MSG425	1
4	48425GT	NUT,FLG-LRG,3/8-16,YZ	
5	49381GT	SCREW,HHC,M12 X 30	
6	1702GT	HOSE-HEATER,5/8 ID-BLACK	1
7	46131GT	CLAMP,HOSE,.63" - 1.0" X .5"	4
8	215316GT	REGULATOR, LP, MSG425	1
8-	219477GT	ISOLATOR, DEPR	
8-	119055GT	HOSE ASSY,LP GAS Attach LPG hose (119055GT) to LPG Locoff Valave, other end to LP tank	
8-	73599GT	CAP,PROT.,RED,1.38ID X .75 DP for 1276926	
9	119232GT	LOCKOFF,LP,FORD DSG/MSG	1
10	19358GT	CONNECTOR,010102-6-4	10
11	236340GT	HOSE, COOLANT, VAP, MSG425	1
12	236423GT	FORMING, LP REG MOUNT, MSG425	1
13	25368GT	NUT,NYLOCK,M8X1.25	
14	33277GT	WASHER,FLAT,M8,YELLOW ZINC	
15	6198GT	NUT, NYLOCK, 1/2-13	
16	6095GT	WASHER,FLAT,USS,1/2",Y	
17	22788GT	SCREW,HHC,1/2-13 X 1.75	
18	236422GT	ENGINE MOUNT, REAR, MSG425	1
19	6019GT	SCREW,HHC,3/8-16 X 1.25 GRD 5	
20	5397GT	WASHER, FLAT, USS, 5/16-18	
21	4828GT	NUT, NYLOCK, 3/8-16	
22	6145GT	SCREW, HHC, 1/4-20 X 1.5	
23	6097GT	WASHER, FLAT, USS, 3/8", Y	
24	6091GT	NUT,NYLOCK,1/4-20	
25	215317GT	CONTROL MODULE, MSG425 original ECM; component no longer available limited inventory on hand	1

512.1 Ford MSG-425 EFI Engine - View 4 (from SN 24509)

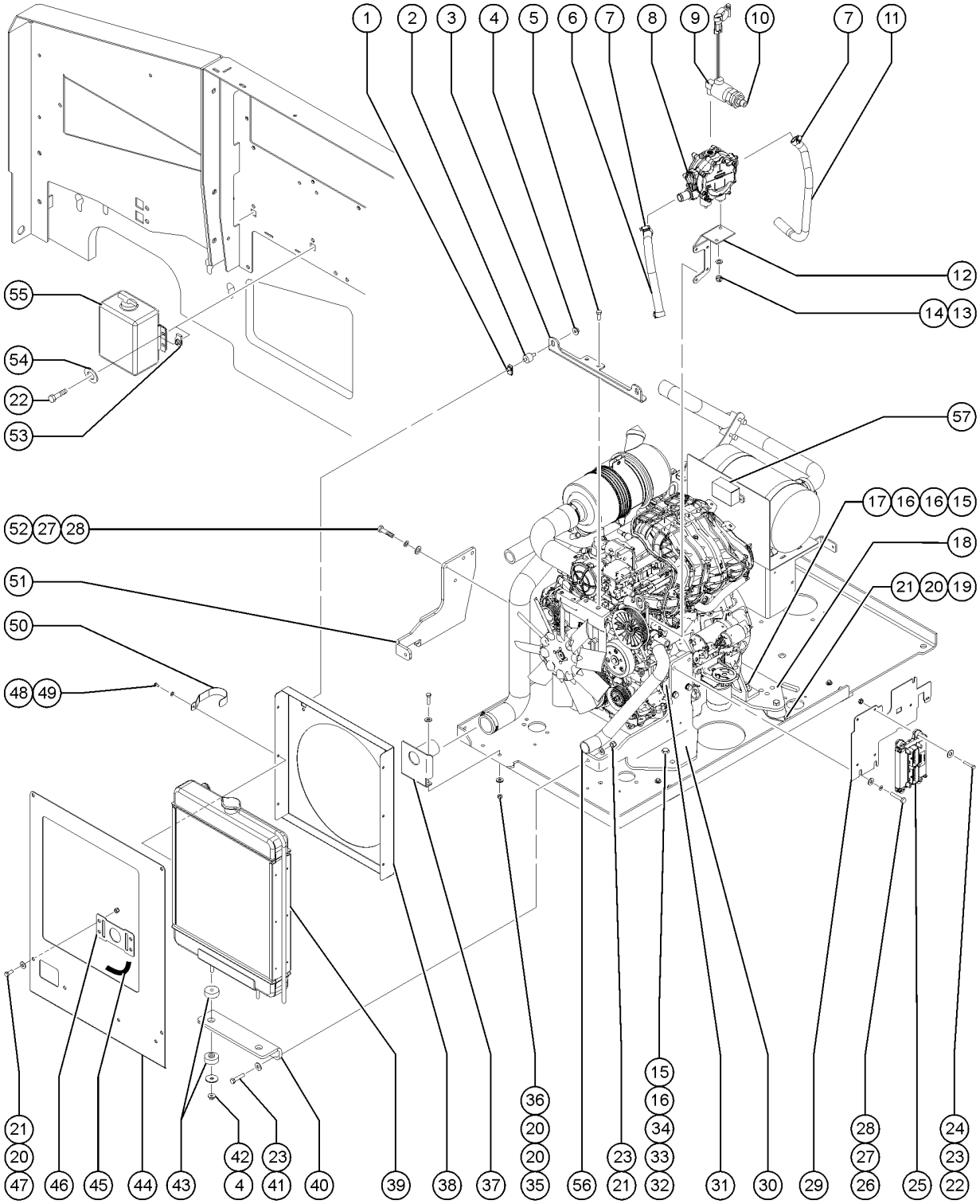

512.1 Ford MSG-425 EFI Engine - View 4 (from SN 24509)

Item	Part No.	Description	Qty.
25B	1294827GT	CONTROL MODULE, MSG425 replacement ECM	1
26	25927GT	SCREW,HHC,3/8-16X1.25,8,ZAG	4
27	22700GT	WASHER,LOCK,M10	8
28	22699GT	WASHER, FLAT, M10, ZINC PLTD.	8
29	236425GT	FORMING, ECU MOUNT, MSG425	1
30	236420GT	ENGINE MOUNT, LEFT, MSG425	1
31	110477GT	PLATE,ENGINE SUPPORT SPACER	1
32	39479GT	SCREW,HHC,1/2-13 X 2.75	
33	70452GT	ISOLATOR,ENGINE VIBRATION	4
34	102066GT	CASTING,WASHER,REBOUND	
35	6782GT	NUT, NYLOCK, 5/16-18	
36	13000GT	SCREW,HHC,5/16-18 X 1.25	
37	216019GT	WDMT, SHROUD INT, S60 MSG425	1
38	236364GT	FAN SHROUD, MSG425	1
39A	110406GT	RADIATOR,FORD DSG423 & MSG425	1
39B	119484GT	CAP,COOLANT 3/4	
40	110417PGT	FORMING,RADIATOR SUPPORT,PNTD	1
41	13918GT	SCREW,HHC,3/8-16 X 1.75,GRD.8	
42	15086GT	WASHER,FLAT,.375 X 1.5 X .125	
43	24038GT	SHOCK MOUNT,SMALL	4
44	237379GT	BAFFLE, CNTRWT, S60 MSG425	1
45	119218GT	TRIM,EDGE,1/8X3/4 SIDE BULB	8 inches
46	238234GT	PLATE, INT. SHRD SEAL, MSG425	1
47	8255GT	SCREW,HHC,3/8-16 X .75	
48	21019GT	SCREW,PHIL,PHM,10-24 X.5,SEMS	
49	6146GT	WASHER,FLAT,MS,#10,Y	
50	237385GT	HOSE HANGER, MSG425	2

512.1 Ford MSG-425 EFI Engine - View 4 (from SN 24509)

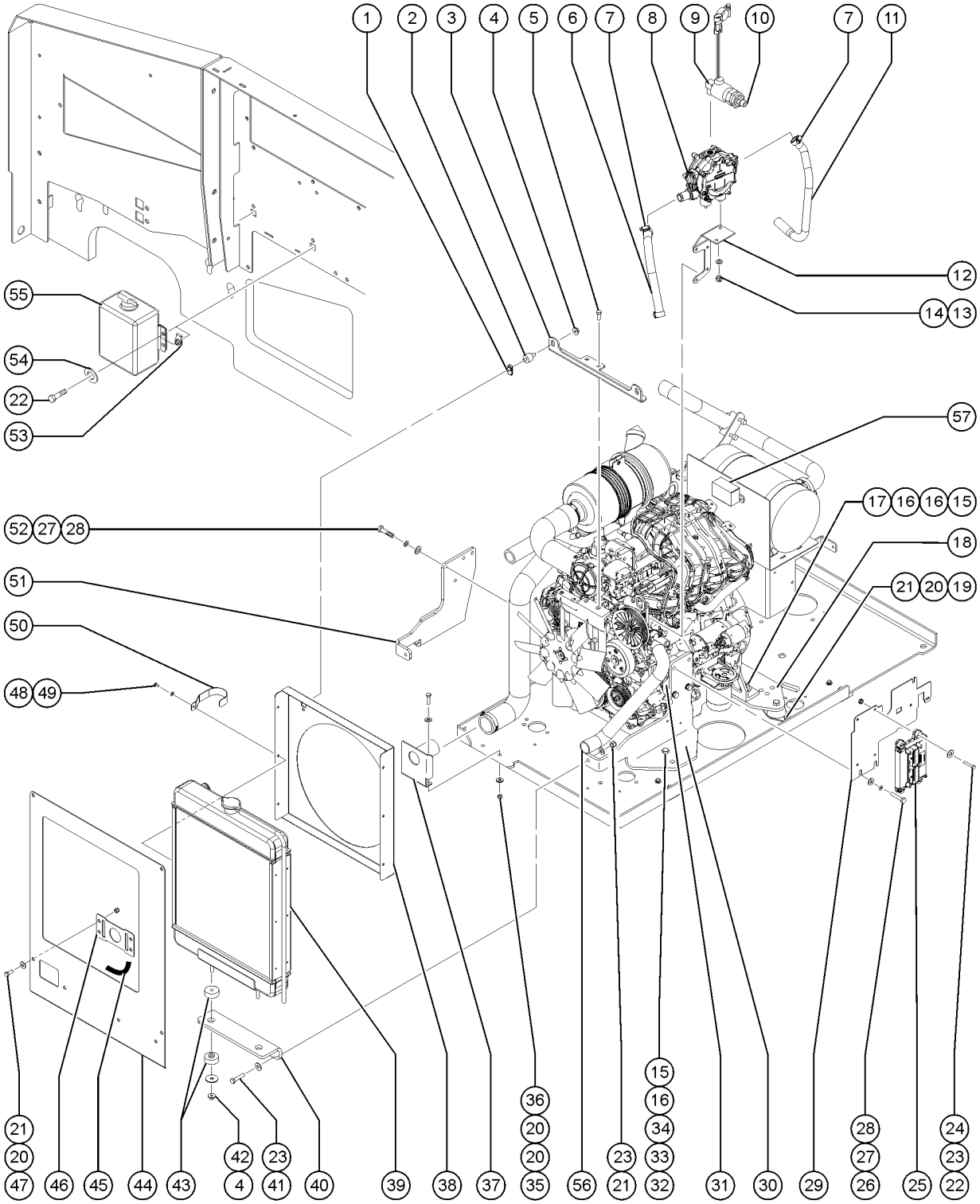

512.1 Ford MSG-425 EFI Engine - View 4 (from SN 24509)

Item	Part No.	Description	Qty.
51	236421GT	ENGINE MOUNT, RIGHT, MSG425	1
52	44064GT	SCREW,HHC,M10 X 30MM,	4
53	56912GT	SPRING CLIP,1/4-20,.025-.15X.54,ZAG	
54	6638GT	WASHER, FLAT, USS, 1/4"Y	
55	70367GT	BOTTLE,COOLANT RECOVERY,3.7*** includes cap	1
55-	72327GT	CAP, COOLANT RET SYS(54071)	
55-	21465GT	CLAMP,HOSE, .25" TO .63" X .3125" (not shown) not included with 70367, must order seperately	
55-	6833GT	CLAMP,0.50,#8 X 1/4,RUB CUSH (not shown) not included with 70367, must order seperately	
55-	106226GT	TUBING,VINYL,1/2" CLEAR	
56	236339GT	HOSE, LOWER RADIATOR, MSG425	1
57A	237856GT	FUSE BOX COVER	1
57B	237857GT	FUSE BOX RELAY STICKER (not shown) not included with 237856, order seperately	1
57C	237858GT	FUSE BOX MOUNTING,LEFT (not shown)	1
57D	237859GT	FUSE BOX MOUNTING,RIGHT (not shown)	1

601.1 Linkage Assembly, S-60

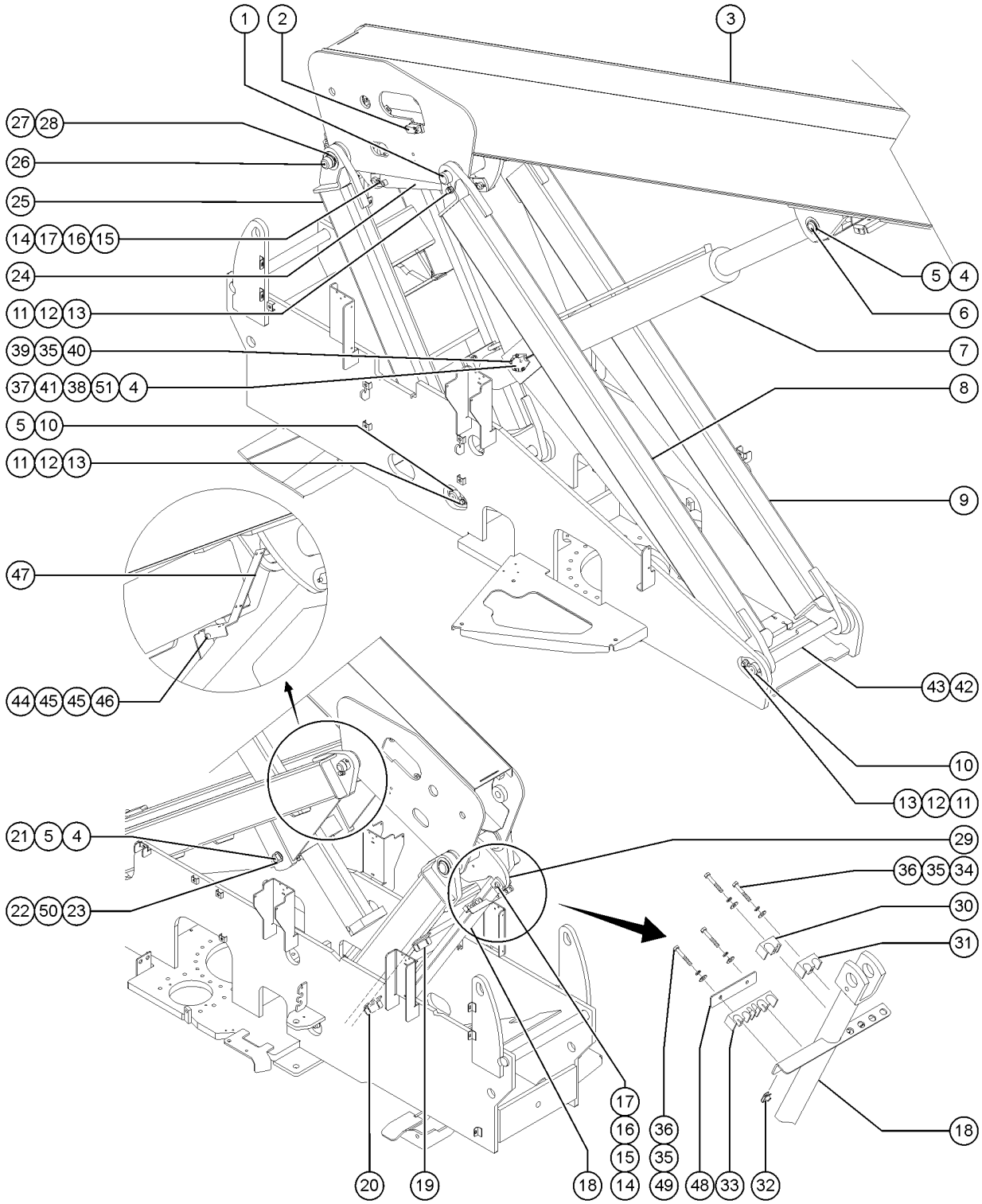

601.1 Linkage Assembly, S-60

Item	Part No.	Description	Qty.
1-	1254639GT	SNAP RING,EXTERNAL,2.25,ZAG	1
1-	1257080GT	WASHER,FLAT,2.27X3.5X.06,ZAG	1
1	1302962GT	PIN,2.25DIAX17.75LG,CHAMFER	1
2		HARNESS,LS,OP,PRIMARY EXT/RET refer to section 307.1	1
3		ASSEMBLY,BOOM TUBE #1 S60/65 refer to section 602.1	1
4	18716GT	SNAP RING,EXTERNAL,2.00 DIA.	2
5	18730GT	WASHER,FLAT,2.01 X 3.5 X .06	9
6	88872GT	PIN,2.00DIAX11.26LG,2RING	1
7A	88653GT	CYLINDER,LIFT,S60*** for all S-60 and S-65 models except S-60 HC	1
7A-	101252GT	SEAL KIT (88653) for 88653	
7A-	61602GT	VALVE,COUNTERBAL.CBBB-LHN@3500 for 88653	
7A-	18720GT	BEARING,2.0IDX2.25ODX1.50L for 88653	
7A-	1262331GT	KIT, GLAND NUT, S60 LIFT CYL. for 88653	
7A-	1268376GT	NUT, PISTON, LIFT CYLINDER for 88653	
7A-	1268377GT	SET SCREW, LIFT CYLINDER for 88653	
7B	107825GT	CYLINDER, LIFT, S60HC FOR S-60 HC	1
7B-	101252GT	SEAL KIT (88653) for 107825	1
7B-	60984GT	VALVE COUNTERBAL.CBBD-LJN@5000 for 107825	2
7B-	128464GT	VALVE,COUNTERBAL,CWCK-LHN@3500 for 107825	1
7B-	18720GT	BEARING,2.0IDX2.25ODX1.50L for 107825	
7B-	1262331GT	KIT, GLAND NUT, S60 LIFT CYL. for 107825	
8	139601GT	ASSY, LONG LINK LT W/BEARINGS	1
8-	18722GT	BEARING,2.25IDX2.50ODX1.50L***	
8-	88920GT	BEARING,FL,2.00IDX2.25ODX1.50L	
9	139602GT	ASSY, LONG LINK RT W/BEARINGS	1
9-	18722GT	BEARING,2.25IDX2.50ODX1.50L***	
9-	88920GT	BEARING,FL,2.00IDX2.25ODX1.50L	
10	88676GT	PIN,2.00DIAX24.00LG,CHAMFER***	2

601.1 Linkage Assembly, S-60

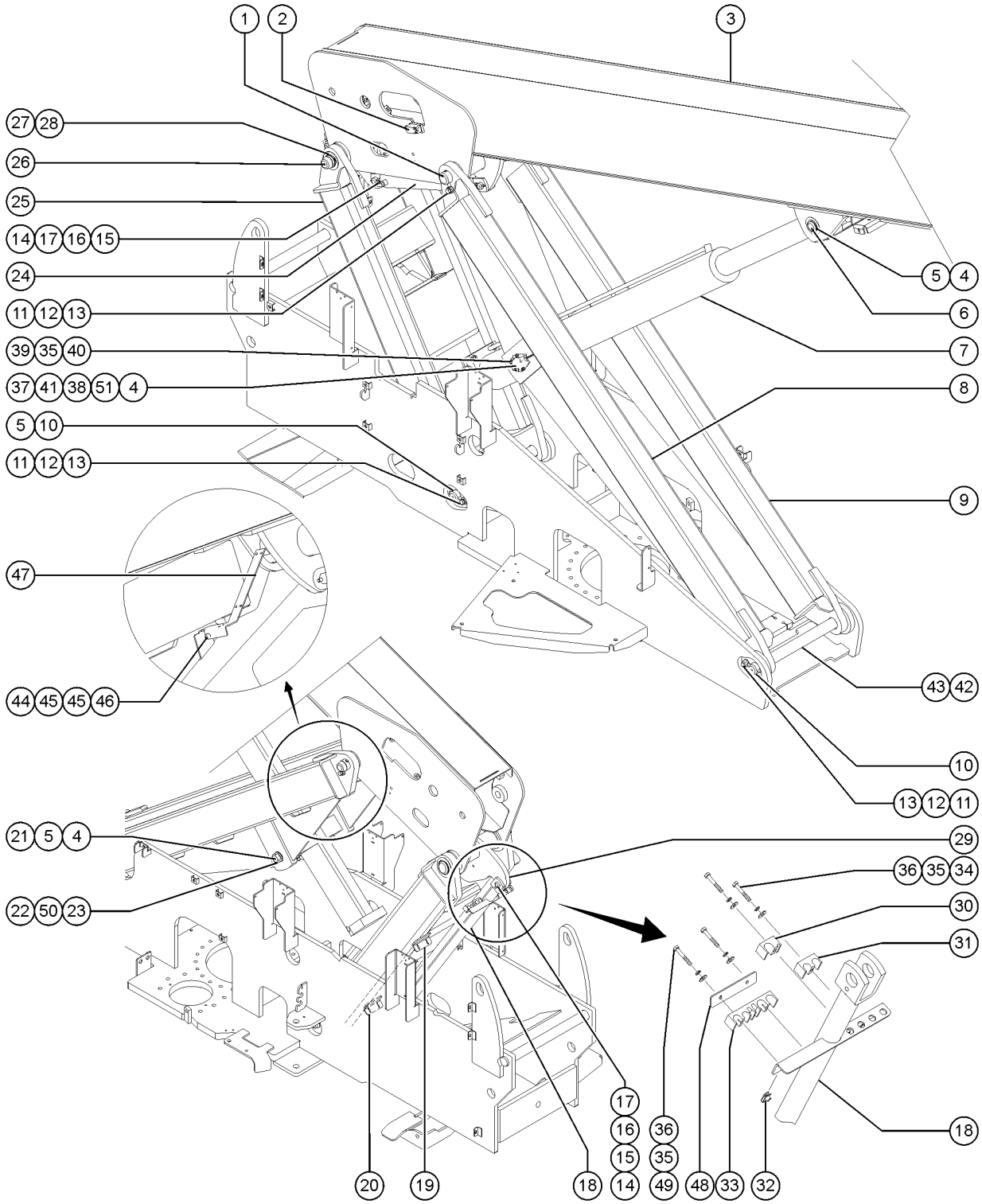

Item	Part No.	Description	Qty.
11	8177GT	SCREW,HHC,1/2-13 X 1.5	
12	6033GT	WASHER,LOCK,0.5"	
13	1256267GT	ROD END,.5 X 3.75,ZAG	2
14	34276GT	PIN,1.25DIAX3.37LG,1HOLE	1
15	1255452GT	ROD END,.375 X 2.25,ZAG	2
16	6021GT	WASHER, LOCK, .375	
17	6175GT	SCREW,HHC,3/8-16 X 1	
18	88675GT	WELDMENT,MASTER LINK	1
19		HARNESS,LS,OP,PRIMARY ANGLE refer to section 307.1	1
19-	88356-11103GT	SWITCH,LIMIT,W/RLR ARM,NO/NC	
19-	43960GT	WIRE CABLE,16/4 CON.TPE JKT	86 inches
19-	119056GT	CONN, PLUG, 2 WAY, DEUTSCH, DT, ENDCAP	
19-	60425GT	CONN, PLUG, 2 WAY, DEUTSCH, DT, LOCK	
19-	54260GT	TERM,NI SOC,14-16GA,BULK	
19-	73814GT	CONN,DSCH,BOOT,DT2S-BT	
19-	19491GT	CONTACTOR,LIMIT SWITCH	
19-	97128GT	ROLLER ARM,LIMIT SWITCH***	
20		HARNESS,LS,OP,PRIMARY VELOCITY refer to section 307.1	1
20-	88356-11103GT	SWITCH,LIMIT,W/RLR ARM,NO/NC	
20-	43960GT	WIRE CABLE,16/4 CON.TPE JKT	61 inches
20-	119058GT	CONN, PLUG, 4 WAY, DEUTSCH, DT, ENDCAP	
20-	60429GT	LOCK, PLUG 4WAY, 14-18GA	
20-	54260GT	TERM,NI SOC,14-16GA,BULK	
20-	73739GT	BOOT,PLUG 4 WAY	
20-	19491GT	CONTACTOR,LIMIT SWITCH	
20-	97128GT	ROLLER ARM,LIMIT SWITCH***	
21	88666GT	PIN,2 X 5.75 LG	1

601.1 Linkage Assembly, S-60

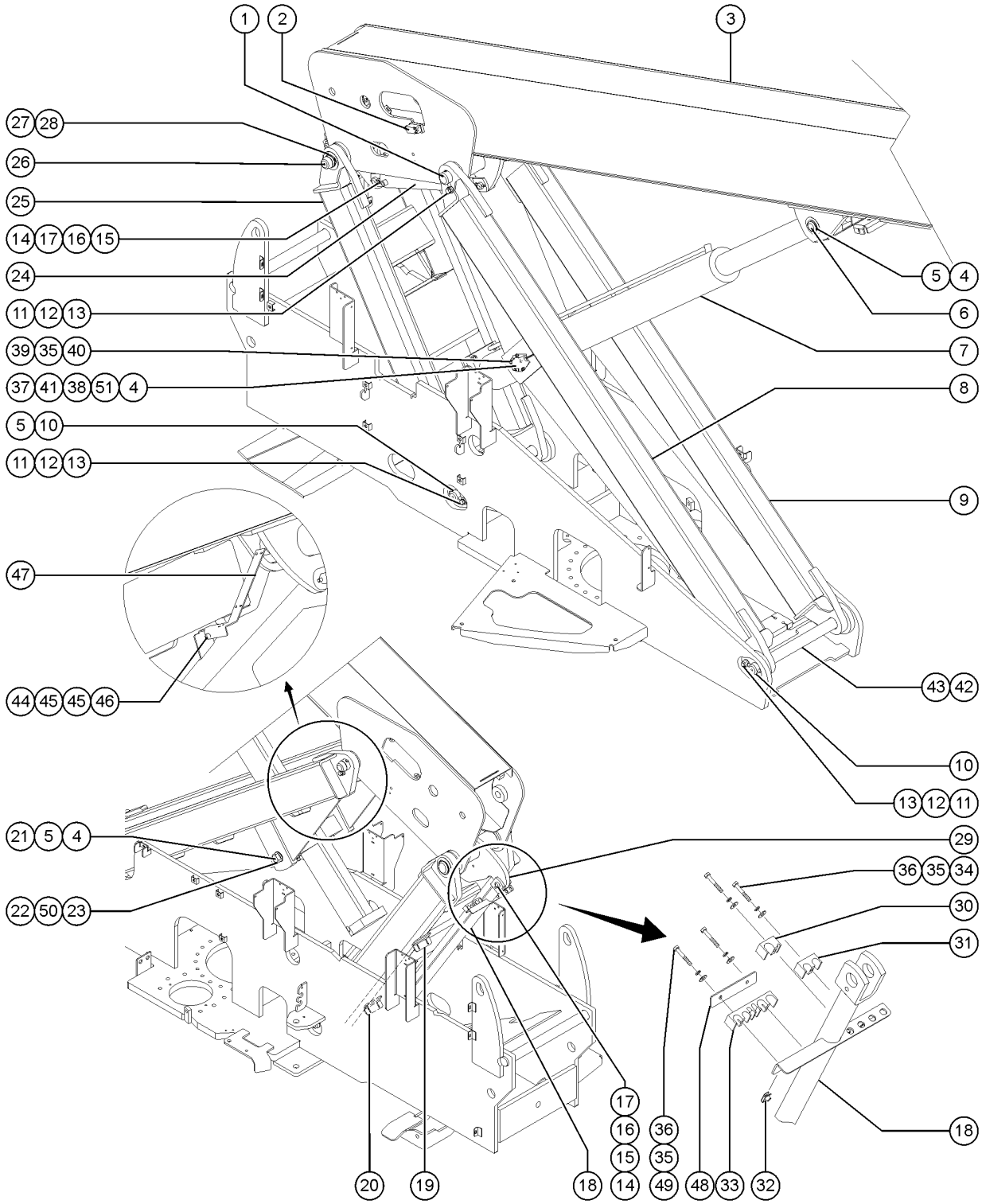

Item	Part No.	Description	Qty.
22	13854GT	SCREW,HHC,1/2-13 X 4.5,GRD.8	2
23	6198GT	NUT, NYLOCK, 1/2-13	
24	88668GT	CYLINDER,MASTER,S60,S65 component no longer available	1
24-	101253GT	SEAL KIT (88668) for 88668; to SN 23218	
24-	81694GT	CYLINDER,MASTER from SN 23219	
24-	75470GT	SEAL KIT,CYL,S45 MASTER(81694) for 81694; from SN 23219	
25	T106508GT	SHORT LINK W/BEARINGS, SERVICE (includes items 26-28)	1
25-	T106413GT	WELDMENT, SHORT LINK, S60/65	
25-	18720GT	BEARING,2.0IDX2.25ODX1.50L	
25-	18722GT	BEARING,2.25IDX2.50ODX1.50L***	
26	119990GT	PIN,2.25DIAX18.75LG,CHAMFER	1
27	1257080GT	WASHER,FLAT,2.27X3.5X.06,ZAG	6
28	18717GT	SNAP RING,EXTERNAL,2.25 DIA.	2
29	77672GT	WELDMENT,TIMING LINK CAM	1
29-	88919GT	BEARING,FL,2.25IDX2.50ODX1.63L	
29-	30370GT	BEARING,1.25IDX1.5ODX1.00L	
30A	70290GT	CLAMP,LINK,LH (shown) to SN 22585	1
30B	824550GT	CLAMP, TIMING LINK, LH (not shown) replaces both items 30 & 31, from SN 22586	
31A	70289GT	CLAMP,LINK,LH WELD WIRE to SN 22585	1
31B	824550GT	CLAMP, TIMING LINK, LH (not shown) replaces both items 30 & 31, from SN 22586	
32	25969GT	SPRING CLIP, 1/4-20 BLACK	4
33A	139793GT	CLAMP, TIMING LINK (shown) to SN 22585	1
33B	T115605GT	CLAMP, TIMING LINK (not shown) from SN 22586 to 26286	
33C	824546GT	CLAMP, TIMING LINK, RH (not shown) from SN 26287	
34	6637GT	SCREW,HHC,1/4-20 X 1.75	2
35	6356GT	WASHER, LOCK, .25	4
36	6638GT	WASHER, FLAT, USS, 1/4"Y	4
37	147834GT	ASSY, ANGLE SENSOR AND COVER all models except S-60HC	1

601.1 Linkage Assembly, S-60

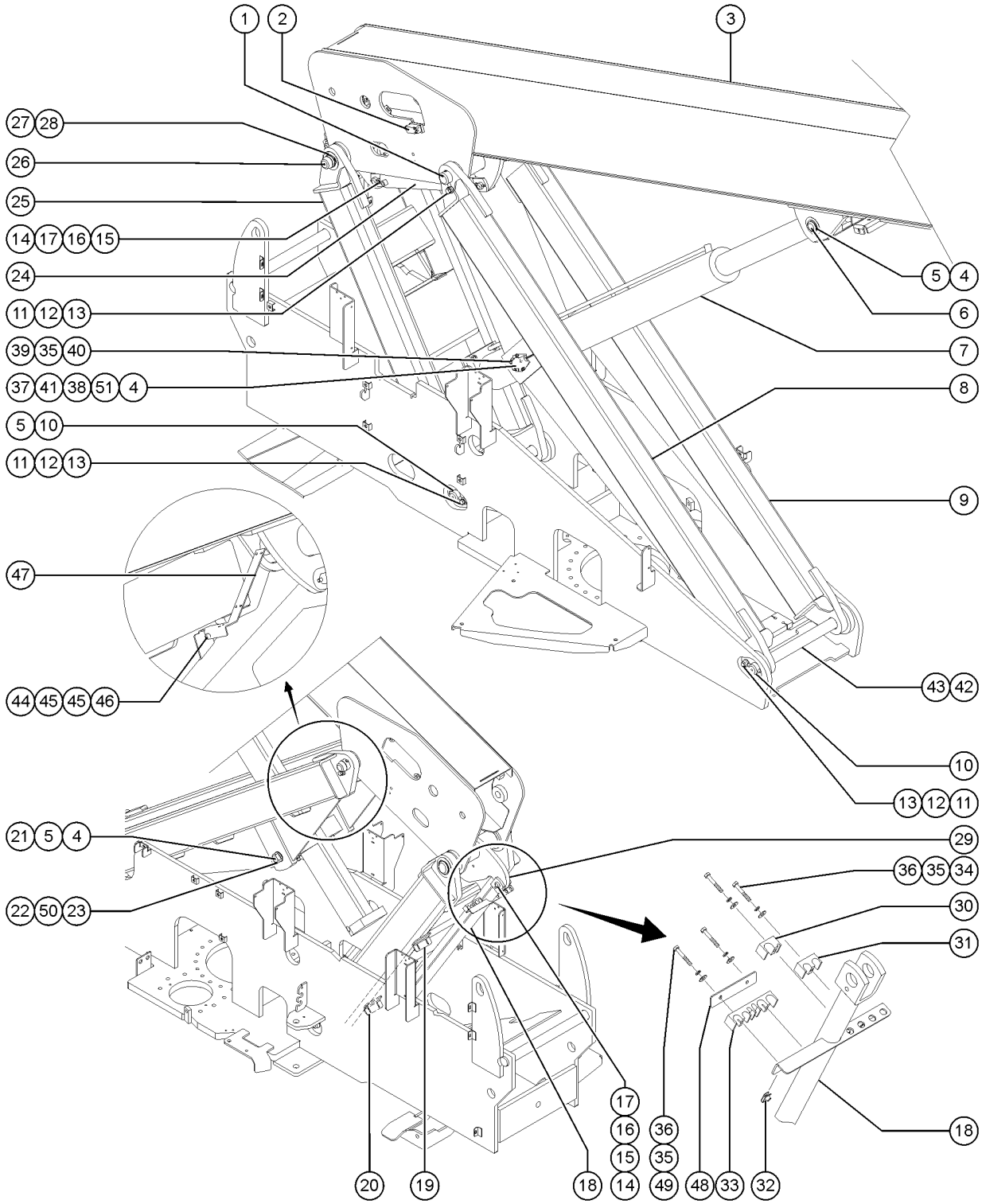

Item	Part No.	Description	Qty.
37-	94980GT	SENSOR,DUAL OUTPUT,ANGLE***	
37-	110452GT	COVER,STEERING SENSOR	
37-	60746GT	BUSHING, STRAIN RELIEF, 1"	
37-	75041GT	SCREW,PHILLIPS,PHM,10-32 X 1	
37-	6607GT	WASHER,LOCK,#10 PLTD	
38	147842GT	PIN, LIFT CYL, HEX END	1
39	6090GT	SCREW, HHC, 1/4-20 X .75	
40	6638GT	WASHER, FLAT, USS, 1/4"Y	
41	147571GT	KEY, HEX, 5/16" X 2.50"LG,SS	1
42	110908GT	WELDMENT, LONG LINK SPACER	1
43	10597GT	SCREW,HHC,1/2-13 X 1.25 GR5	1
44	815852GT	SCREW,HHC,7/16-14 X 1.75 from SN 22987	
45	106134GT	WASHER,FLAT,HARDENED 7/16 from SN 22987	
46	11210GT	NUT,NYLOCK,7/16-14 from SN 22987	
47	230497GT	FORMING,ANGLE SENSOR CABLE from SN 22987	1
48	1314781GT	BAR, CLAMP, TIMING LINK, S60, PTD from SN 22586	1
49A	6637GT	SCREW,HHC,1/4-20 X 1.75 to SN 22585	2
49B	36294GT	SCREW,HHC,1/4-20 X 2.75 from SN 22586	2
50	13066GT	WASHER,FLAT,.5 HARDENED	2
51	T107751GT	WASHER,FLAT,2.01X2.25X.06,PLTD	1

601.2 Linkage Assembly, S-65

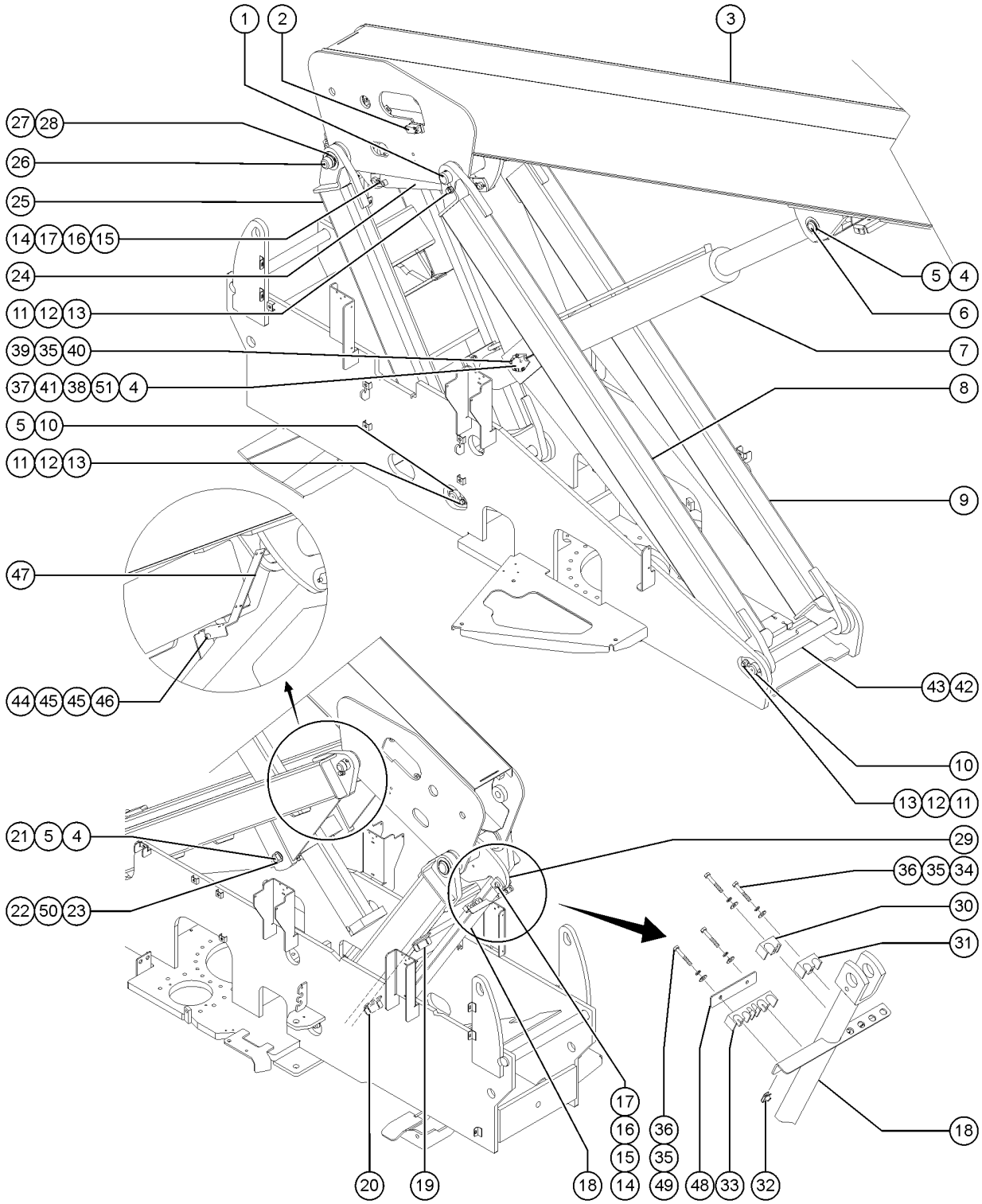

Item	Part No.	Description	Qty.
1	1302962GT	PIN,2.25DIAX17.75LG,CHAMFER	1
1-	1257080GT	WASHER,FLAT,2.27X3.5X.06,ZAG	1
1-	1254639GT	SNAP RING,EXTERNAL,2.25,ZAG	1
2		HARNESS,LS,OP,PRIMARY EXT/RET refer to section 307.1	1
3		ASSEMBLY,BOOM TUBE #1 S60/65 refer to section 602.1	1
4	18716GT	SNAP RING,EXTERNAL,2.00 DIA.	2
5	18730GT	WASHER,FLAT,2.01 X 3.5 X .06	9
6	88872GT	PIN,2.00DIAX11.26LG,2RING	1
7A	88653GT	CYLINDER,LIFT,S60***	1
7A-	101252GT	SEAL KIT (88653) for 88653	
7A-	61602GT	VALVE,COUNTERBAL.CBBB-LHN@3500 for 88653	
7A-	18720GT	BEARING,2.0IDX2.25ODX1.50L for 88653	
7A-	1262331GT	KIT, GLAND NUT, S60 LIFT CYL. for 88653	
7A-	1268376GT	NUT, PISTON, LIFT CYLINDER for 88653	
7A-	1268377GT	SET SCREW, LIFT CYLINDER for 88653	
8	139601GT	ASSY, LONG LINK LT W/BEARINGS	1
8-	18722GT	BEARING,2.25IDX2.50ODX1.50L***	
8-	88920GT	BEARING,FL,2.00IDX2.25ODX1.50L	
9	139602GT	ASSY, LONG LINK RT W/BEARINGS	1
9-	18722GT	BEARING,2.25IDX2.50ODX1.50L***	
9-	88920GT	BEARING,FL,2.00IDX2.25ODX1.50L	
10	88676GT	PIN,2.00DIAX24.00LG,CHAMFER***	1
11	8177GT	SCREW,HHC,1/2-13 X 1.5	
12	6033GT	WASHER,LOCK,0.5"	
13	1256267GT	ROD END,.5 X 3.75,ZAG	2
14	34276GT	PIN,1.25DIAX3.37LG,1HOLE	1
15	1255452GT	ROD END,.375 X 2.25,ZAG	2
16	6021GT	WASHER, LOCK, .375	

601.2 Linkage Assembly, S-65

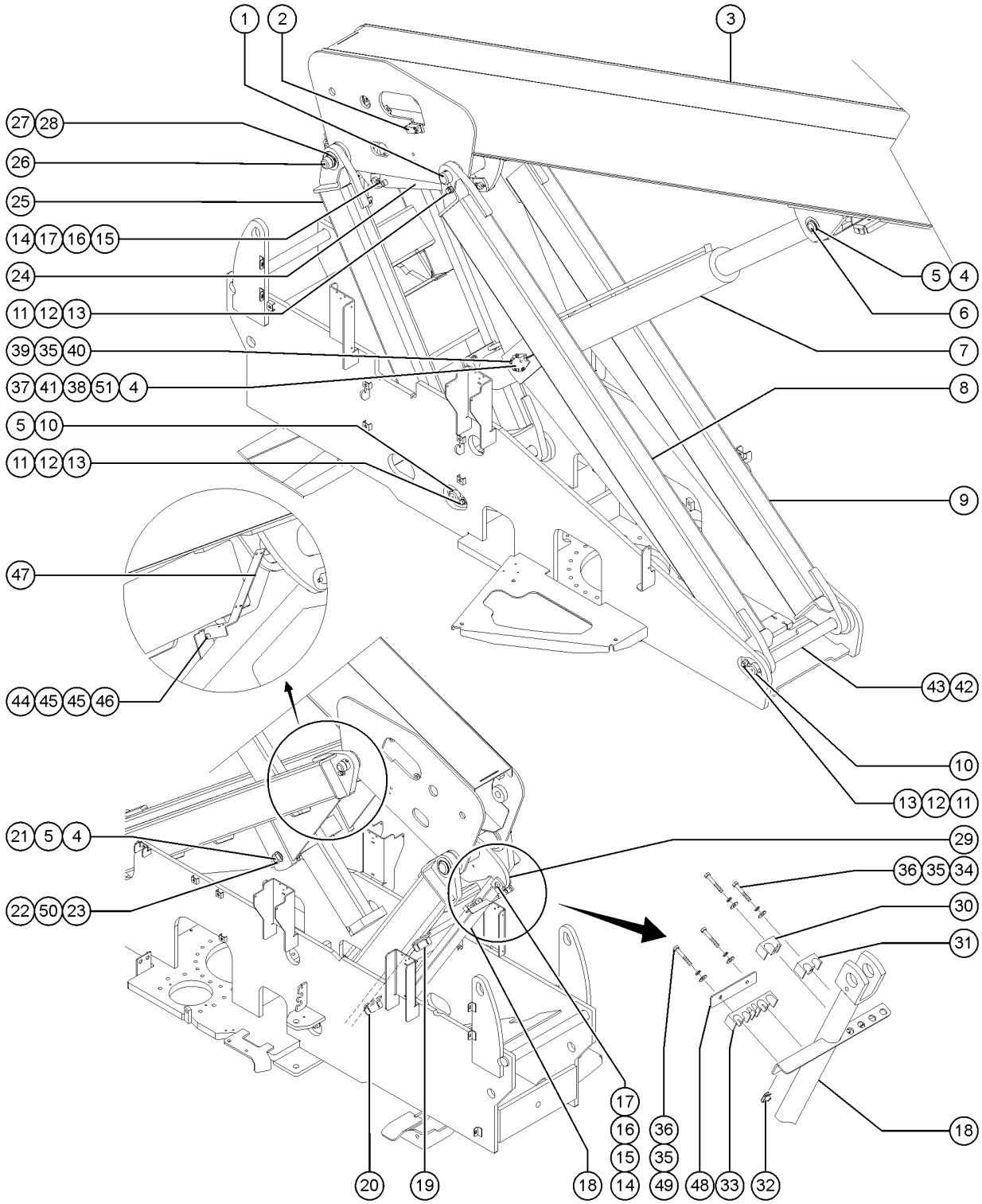

Item	Part No.	Description	Qty.
17	6175GT	SCREW,HHC,3/8-16 X 1	
18	88675GT	WELDMENT,MASTER LINK	1
19		HARNESS,LS,OP,PRIMARY ANGLE refer to section 307.1	1
19-	88356-11103GT	SWITCH,LIMIT,W/RLR ARM,NO/NC	
19-	43960GT	WIRE CABLE,16/4 CON.TPE JKT	86 inches
19-	119056GT	CONN, PLUG, 2 WAY, DEUTSCH, DT, ENDCAP	
19-	60425GT	CONN, PLUG, 2 WAY, DEUTSCH, DT, LOCK	
19-	54260GT	TERM,NI SOC,14-16GA,BULK	
19-	73814GT	CONN,DSCH,BOOT,DT2S-BT	
19-	19491GT	CONTACTOR,LIMIT SWITCH	
19-	97128GT	ROLLER ARM,LIMIT SWITCH***	
20		HARNESS,LS,OP,PRIMARY VELOCITY refer to section 307.1	1
20-	88356-11103GT	SWITCH,LIMIT,W/RLR ARM,NO/NC	
20-	43960GT	WIRE CABLE,16/4 CON.TPE JKT	61 inches
20-	119058GT	CONN, PLUG, 4 WAY, DEUTSCH, DT, ENDCAP	
20-	60429GT	LOCK, PLUG 4WAY, 14-18GA	
20-	54260GT	TERM,NI SOC,14-16GA,BULK	
20-	73739GT	BOOT,PLUG 4 WAY	
20-	19491GT	CONTACTOR,LIMIT SWITCH	
20-	97128GT	ROLLER ARM,LIMIT SWITCH***	
21	88666GT	PIN,2 X 5.75 LG	1
22	13854GT	SCREW,HHC,1/2-13 X 4.5,GRD.8	2
23	6198GT	NUT, NYLOCK, 1/2-13	
24	88668GT	CYLINDER,MASTER,S60,S65 component no longer available	1
24-	101253GT	SEAL KIT (88668) to SN 23218	
24-	81694GT	CYLINDER,MASTER from SN 23218	
24-	75470GT	SEAL KIT,CYL,S45 MASTER(81694) for 81694	

601.2 Linkage Assembly, S-65

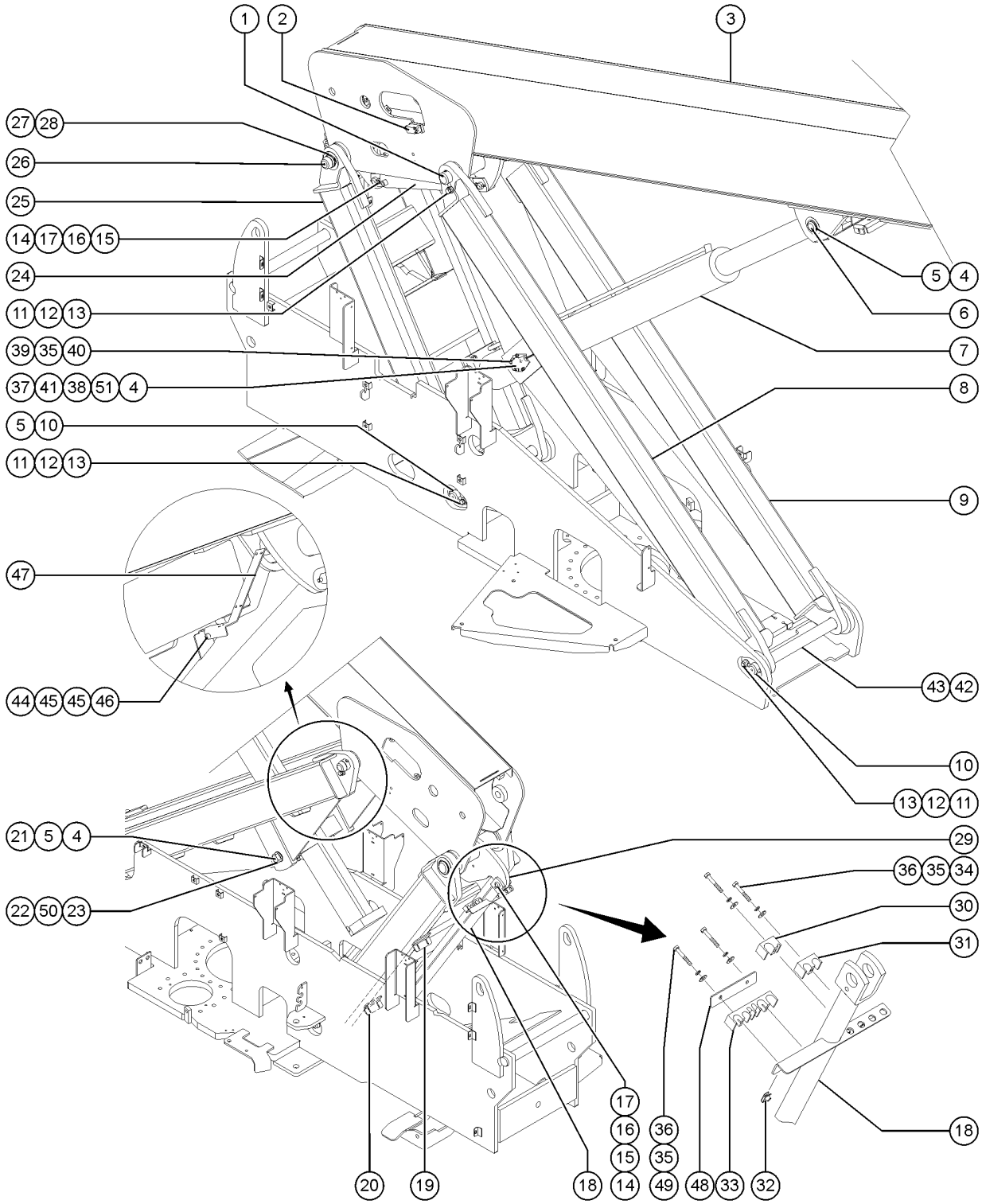

Item	Part No.	Description	Qty.
25	T106508GT	SHORT LINK W/BEARINGS, SERVICE (includes items 26-28)	1
25-	T106413GT	WELDMENT, SHORT LINK, S60/65	
25-	18720GT	BEARING,2.0IDX2.25ODX1.50L	
25-	18722GT	BEARING,2.25IDX2.50ODX1.50L***	
26	119990GT	PIN,2.25DIAX18.75LG,CHAMFER	1
27	1257080GT	WASHER,FLAT,2.27X3.5X.06,ZAG	6
28	18717GT	SNAP RING,EXTERNAL,2.25 DIA.	2
29	77672GT	WELDMENT,TIMING LINK CAM	1
29-	88919GT	BEARING,FL,2.25IDX2.50ODX1.63L	
29-	30370GT	BEARING,1.25IDX1.5ODX1.00L	
30A	70290GT	CLAMP,LINK,LH	1
30B	824550GT	CLAMP, TIMING LINK, LH (not shown) replaces both items 30 & 31, from SN 22586	
31A	70289GT	CLAMP,LINK,LH WELD WIRE	1
31B	824550GT	CLAMP, TIMING LINK, LH (not shown) replaces both items 30 & 31, from SN 22586	
32	25969GT	SPRING CLIP, 1/4-20 BLACK	4
33A	139793GT	CLAMP, TIMING LINK (shown) to SN 22585	
33B	T115605GT	CLAMP, TIMING LINK (not shown) from SN 22586 to 26286	
33C	824546GT	CLAMP, TIMING LINK, RH (not shown) from SN 26287	
34	6637GT	SCREW,HHC,1/4-20 X 1.75	4
35	6356GT	WASHER, LOCK, .25	4
36	6638GT	WASHER, FLAT, USS, 1/4"Y	4
37	147834GT	ASSY, ANGLE SENSOR AND COVER all models except S-60HC	1
37-	94980GT	SENSOR,DUAL OUTPUT,ANGLE***	
37-	110452GT	COVER,STEERING SENSOR	
37-	60746GT	BUSHING, STRAIN RELIEF, 1"	
37-	75041GT	SCREW,PHILLIPS,PHM,10-32 X 1	
37-	6607GT	WASHER,LOCK,#10 PLTD	
38	147842GT	PIN, LIFT CYL, HEX END	1

601.2 Linkage Assembly, S-65

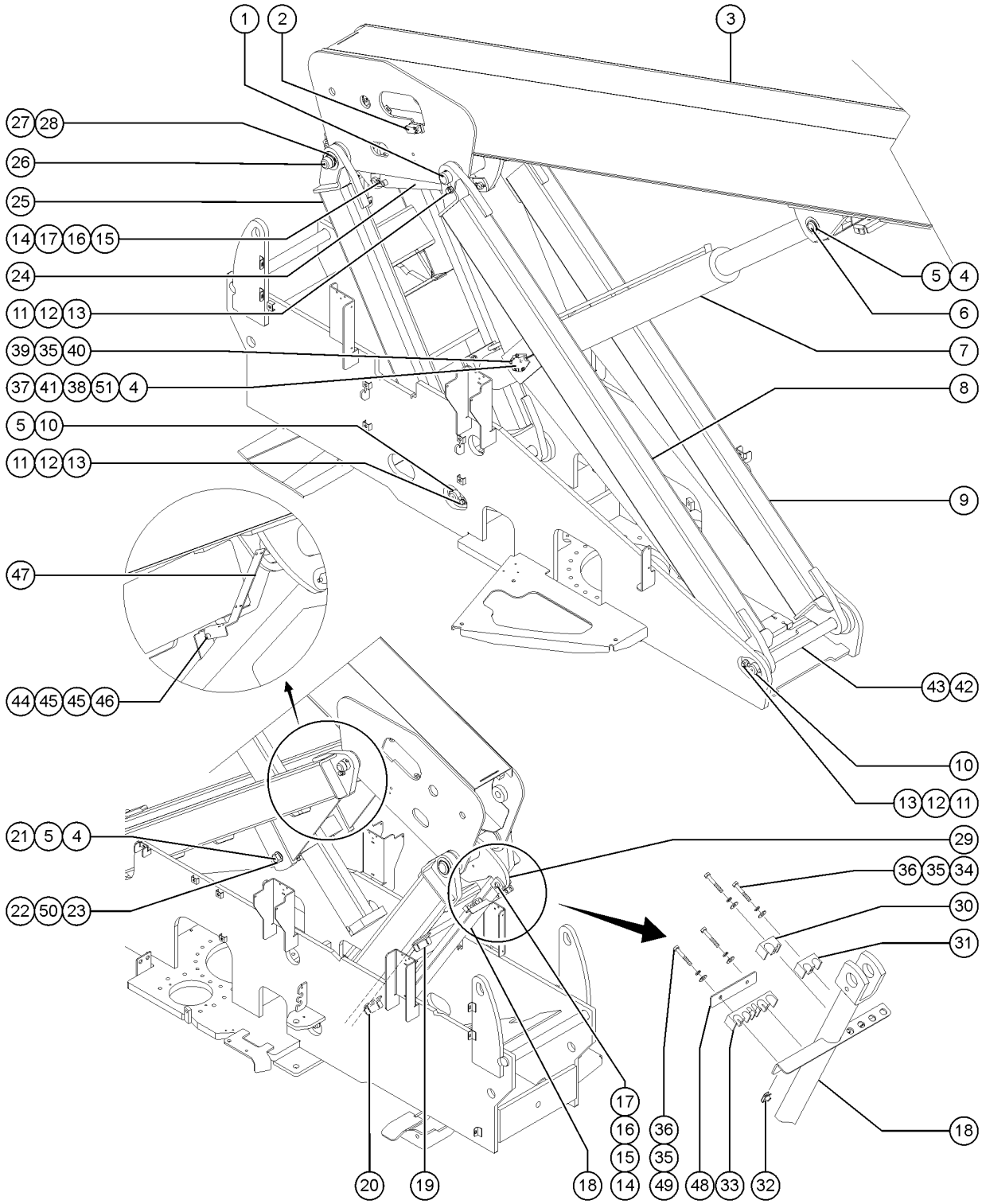

Item	Part No.	Description	Qty.
39	6090GT	SCREW, HHC, 1/4-20 X .75	
40	6638GT	WASHER, FLAT, USS, 1/4"Y	
41	147571GT	KEY, HEX, 5/16" X 2.50"LG,SS	1
42	110908GT	WELDMENT, LONG LINK SPACER	1
43	10597GT	SCREW,HHC,1/2-13 X 1.25 GR5	1
44	815852GT	SCREW,HHC,7/16-14 X 1.75 from SN 22987	
45	106134GT	WASHER,FLAT,HARDENED 7/16 from SN 22987	
46	11210GT	NUT,NYLOCK,7/16-14 from SN 22987	
47	230497GT	FORMING,ANGLE SENSOR CABLE from SN 22987	1
48	227125GT	BAR, CLAMP, TIMING LINK from SN 22586	1
49A	6637GT	SCREW,HHC,1/4-20 X 1.75 to SN 22585	2
49B	36294GT	SCREW,HHC,1/4-20 X 2.75 from SN 22586	2
50	13066GT	WASHER,FLAT,.5 HARDENED	2
51	T107751GT	WASHER,FLAT,2.01X2.25X.06,PLTD	1

602.1 Boom Components - View 1

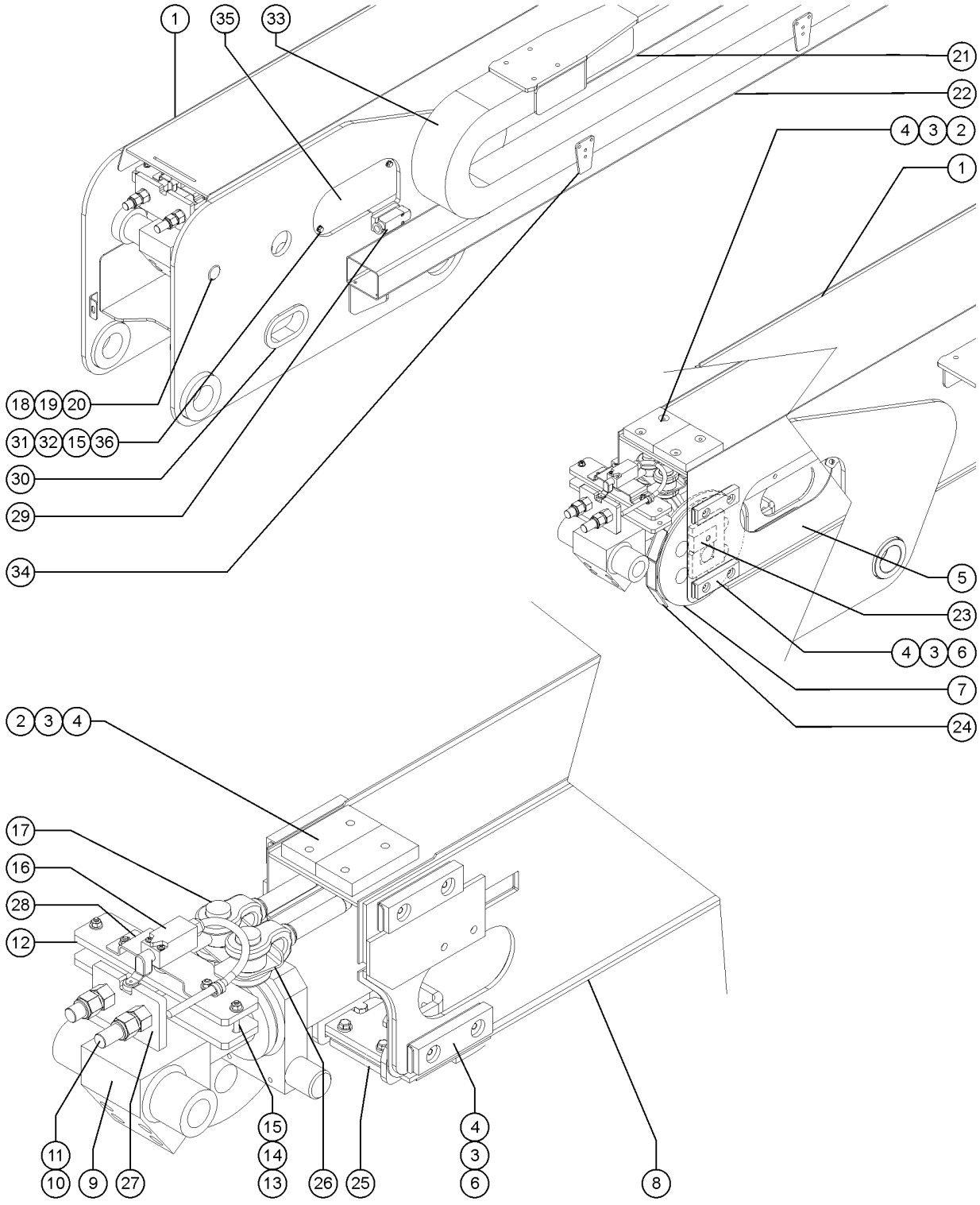

602.1 Boom Components - View 1

Item	Part No.	Description	Qty.
1	T108890GT	#1 BOOM TUBE ASSY,W/WORD DECAL USA, Canada and Australia models	1
1-	T108891GT	#1 BOOM TUBE ASSEMBLY, W/SYMBOL DECAL, South America, Asia and Europe models	
1-	88919GT	BEARING,FL,2.25IDX2.50ODX1.63L	4
1-	18720GT	BEARING,2.0IDX2.25ODX1.50L	2
1-	30370GT	BEARING,1.25IDX1.5ODX1.00L	1
2	34124GT	WEAR PAD,5 X 3 X .625 W/NUTS	4
2-	34344GT	SHIM, PAD, 3 x 5	
3	6021GT	WASHER, LOCK, .375	
4	28487GT	SCREW,BHHS,3/8-16 X 1	
5A	147617GT	WELDMENT, BOOM SECTION #2 S-60X and S-60XC models	1
5B	63078GTSB	WELDMENT, BOOM SEC #2, S60/65, SUNBELT S-60, S-60HX, S-60TRAX models	1
5C	63078GTSB	WELDMENT, BOOM SEC #2, S60/65, SUNBELT S-65 and S-65TRAX models	1
6	30138GT	WEAR PAD,5 X 1.5 X .625 W/NUTS	
7	88568GT	SHEAVE,RETRACT CABLE(SMALLER)	2
8	94692GT	ASSEMBLY,BOOM TUBE #3 S60/65** USA, Canada and Australia models	1
8-	119567GT	ASSEM,BOOM TUBE #3 S60/65,CE** South America, Asia and Europe models	
8-	34245GT	BEARING,1.25IDX1.50X1.25L	2
9	88571GT	CYLINDER,BOOM EXTENSION	1
9-	88667GT	VALVE,CB.CBCA-LHN@1500PSI***	1
9-	74872GT	VALVE,COUNTERBALANCE 3000 PSI*	1
9-	101251GT	SEAL KIT (88571)	
10	77656GT	ROD END,CABLE	
11	77051GT	NUT,NYLOCK,3/4-10,GRD.8	
12	77654PGT	PLATE,ROCKER	2
13	8179GT	SCREW,HHC,1/4-20 X 2.25	
14	6091GT	NUT,NYLOCK,1/4-20	
15	6638GT	WASHER, FLAT, USS, 1/4"Y	
16		HARNESS,LS,OP,CABLE TENSION refer to 307.1	1

602.1 Boom Components - View 1

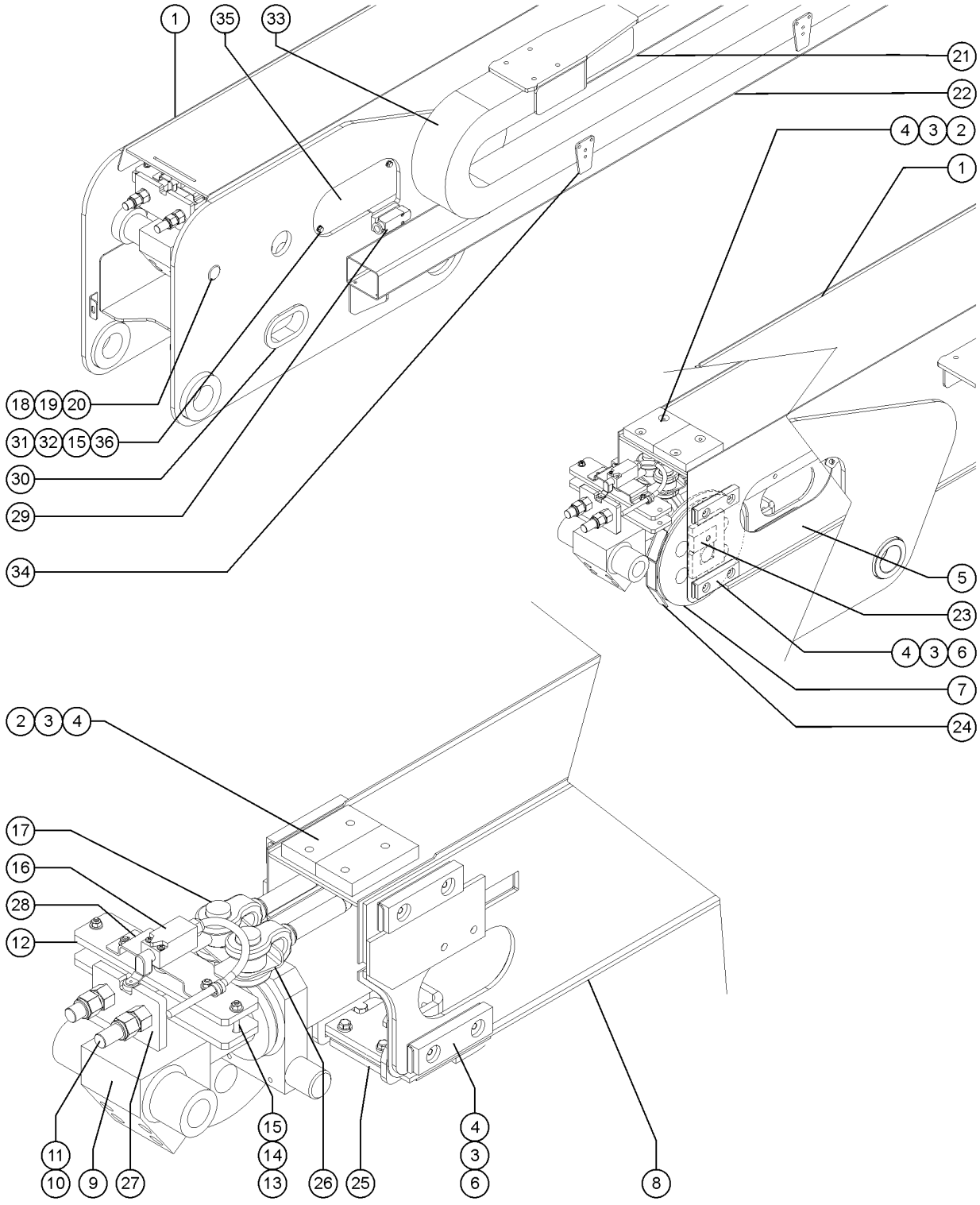

602.1 Boom Components - View 1

Item	Part No.	Description	Qty.
16-	88356-13103GT	SWITCH,LIMIT,W/RLLR ARM,NO/NC	
16-	119067GT	CONN, RECEP, 4 WAY, DEUTSCH, DT, ENDCAP	
16-	60443GT	LOCK, RECEP 4WAY, 14-18GA	
16-	73713GT	TERMINAL, PIN, DT, 14-18 AWG, NICKEL, 0.095-0.150 OD, DEUTSCH, STRIP	
16-	43960GT	WIRE CABLE,16/4 CON.TPE JKT	15 inches
16-	73725GT	BOOT,DTSCH,DTP4-BT	
16-	19491GT	CONTACTOR,LIMIT SWITCH	
16-	97128GT	ROLLER ARM,LIMIT SWITCH***	
17	19440GT	PIN,CLEVIS,1 X 2.5 LG	2
18	81856GT	PIN,1.50DIAX13.43LG,2RING	1
19	825796GT	SNAP RING,EXTERNAL,1.50,ZAG	2
20	18596GT	WASHER,FLAT,1.56 X 2.5 X .061	
21		WELDMENT,CABLE TRACK TUBE refer to 611.1 or 611.2	1
22		WELDMENT,CABLE TRACK TRAY refer to 611.1 or 611.2	1
23	88795PGT	CAP,EXTENSION,PAINTED	1
23-	6175GT	SCREW,HHC,3/8-16 X 1	
23-	6021GT	WASHER, LOCK, .375	
23-	6097GT	WASHER, FLAT, USS, 3/8", Y	
24	107665PGT	COVER,RETRACT SHEAVE,PAINTED	1
25	77718GT	WEAR PAD,5 X 3 X .75	1
25-	34344GT	SHIM, PAD, 3 x 5	as needed
25-	38621GT	SHIM, PAD, 5 x 3	as needed
25-	6019GT	SCREW,HHC,3/8-16 X 1.25 GRD 5	
25-	6021GT	WASHER, LOCK, .375	
26	77618PGT	PLATE,ANTIROTATION	1
27	77795GT	MACHINED PIVOT PLATE WELDMENT	1

602.1 Boom Components - View 1

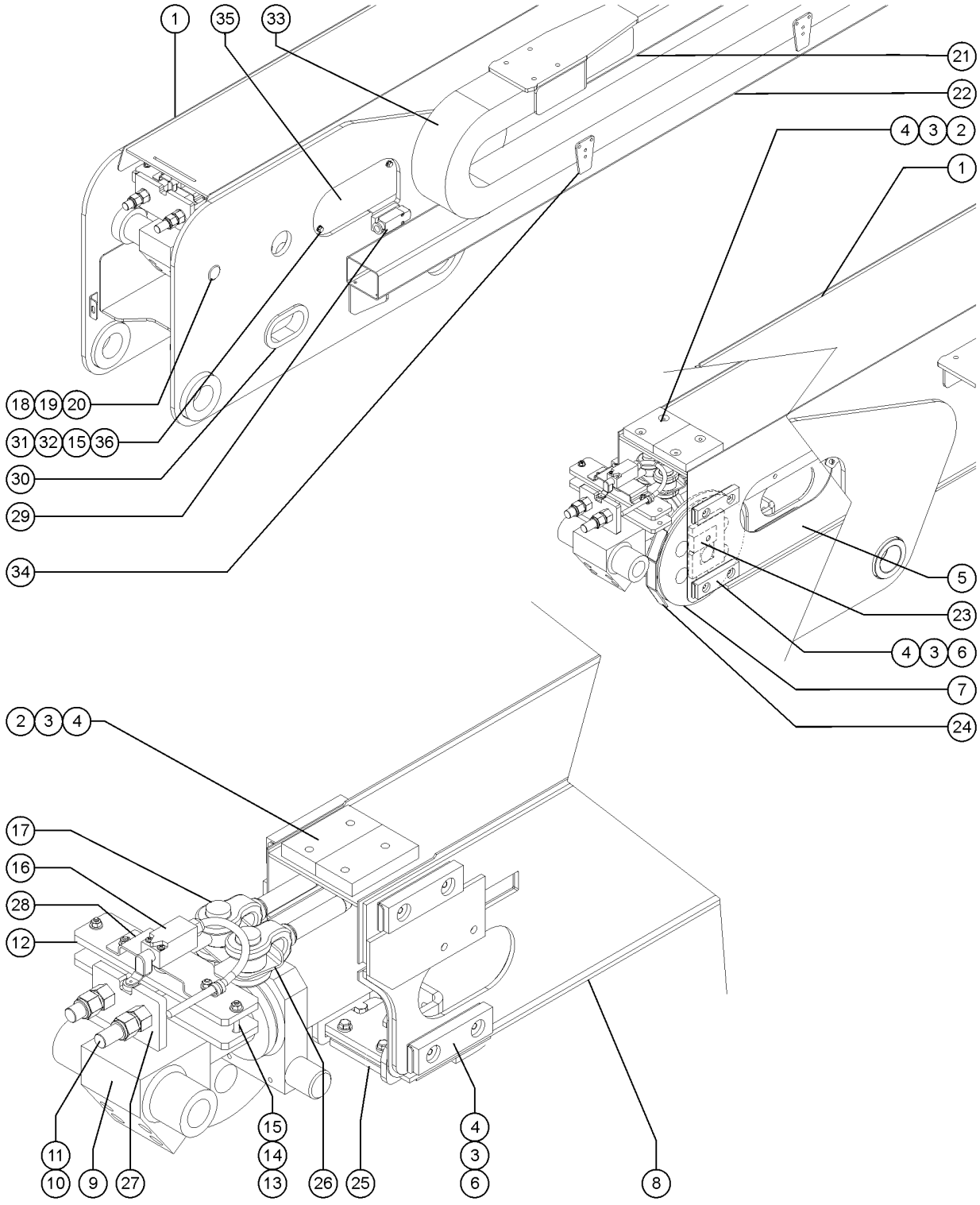

602.1 Boom Components - View 1

Item	Part No.	Description	Qty.
28	77653PGT	FORMING,LIMIT SWITCH BRACKET	1
28-	6888GT	SCREW, HHC, 1/4-20 X 1	
28-	6638GT	WASHER, FLAT, USS, 1/4"Y	
28-	6091GT	NUT,NYLOCK,1/4-20	
29		HARNESS,LS,OP,PRIMARY EXT/RET refer to 307.1	1
29-	88356-14963GT	SWITCH,LIMIT,W/RLLR ARM,NO/NC	
29-	43960GT	WIRE CABLE,16/4 CON.TPE JKT	23 inches
29-	119065GT	CONN, RECEP, 2 WAY, DEUTSCH, DT	
29-	60439GT	CONN, RECEP, 2 WAY, DEUTSCH, DT, LOCK	
29-	73713GT	TERMINAL, PIN, DT, 14-18 AWG, NICKEL, 0.095-0.150 OD, DEUTSCH, STRIP	
29-	73811GT	BOOT, DSCH, DT2P-BT	
29-	19491GT	CONTACTOR,LIMIT SWITCH	
30	71768GT	GROMMET,4.00 GRV. X .75 THK.	1
31	6090GT	SCREW, HHC, 1/4-20 X .75	
32	6356GT	WASHER, LOCK, .25	
33		CABLE TRACK,STEEL 49 LINKS refer to 611.1	1
34		CABLE TRACK GUIDE TRIANGLE refer to 611.1	10
35	77882PGT	COVER,RH,BOOM SECTION #1	1
35-	147403GT	COVER,LH,BOOM SECTION #1	
36	56912GT	SPRING CLIP,1/4-20,.025-.15X.54,ZAG	

603.1 Boom Components - View 2

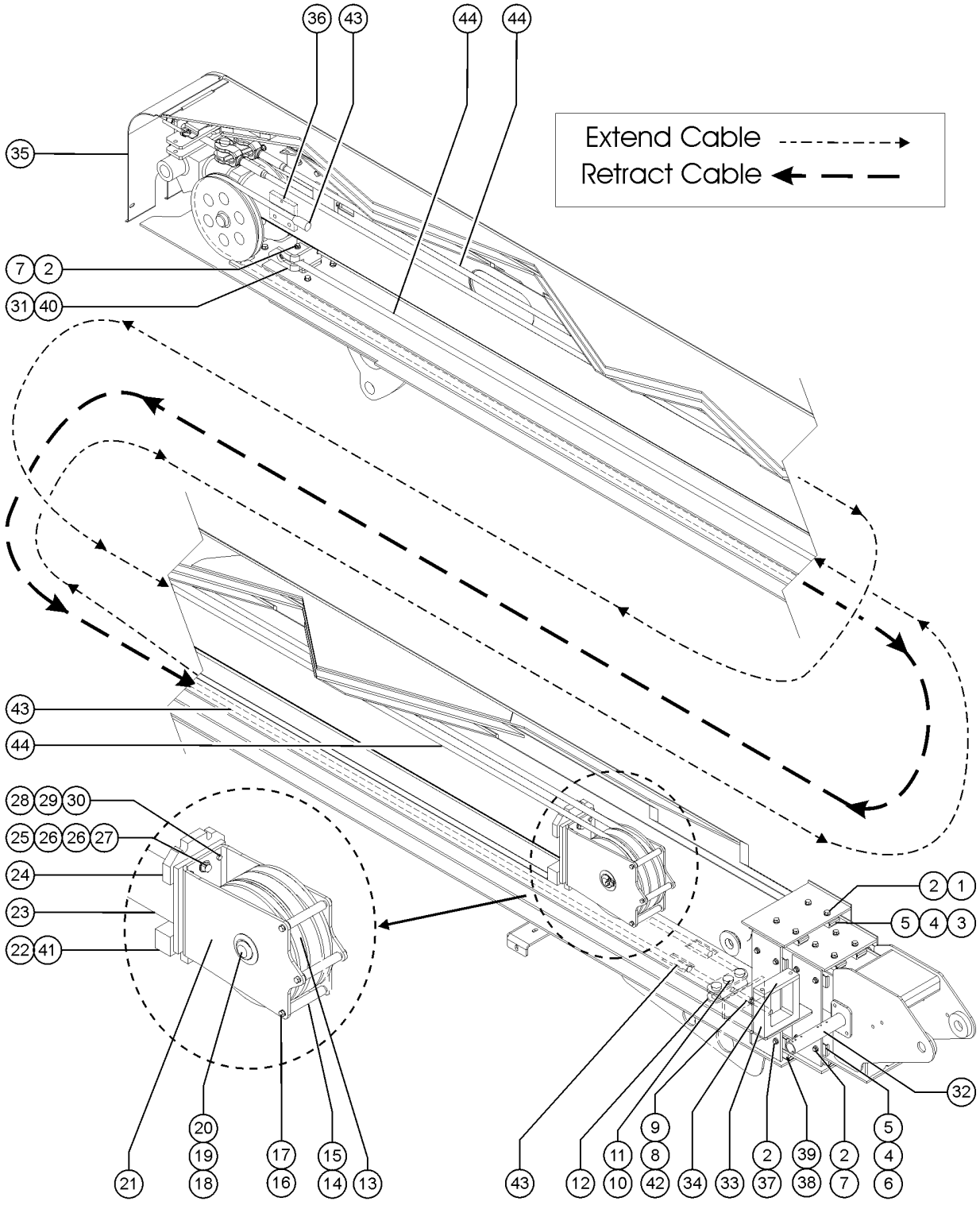

Item	Part No.	Description	Qty.
A	214690GT	KIT,EXTEND/RETRACT CABLE,S60 (includes items 43 & 44) (for easier installation, suggest ordering 94510, below)	
B	94510GT	TOOL,CABLE GRIP, 7/16" for installation of 214690	
C	74389GT	RUE RING 1.00	
1	6175GT	SCREW,HHC,3/8-16 X 1	
2	6021GT	WASHER, LOCK, .375	
3	30138GT	WEAR PAD,5 X 1.5 X .625 W/NUTS	8
4	38620GT	SHIM,WEAR PAD,5 X 1.5,14GA	16
5	29080GT	SHIM,WEAR PAD,5X 1.5 16GA	16
6	34125GT	WEAR PAD,5 X 1.5 X .75 W/NUTS	8
7	6019GT	SCREW,HHC,3/8-16 X 1.25 GRD 5	
8	77656GT	ROD END,CABLE	
9	77051GT	NUT,NYLOCK,3/4-10,GRD.8	
10	826379GT	PIN,CLEVIS,1X2.250,ZAG	4
11	13635-10GT	PIN,COTTER,.156 X 1.75	4
12	88796GT	PLATE,RETRACTION CABLE EQUALIZ	2
13	88567GT	SHEAVE,EXTENSION CABLE(LARGER)	1
14	77648GT	ROLLER,1/2" PVC	1
15	77649GT	ROLLER,1/2" ALUMINUM	1
16	6090GT	SCREW, HHC, 1/4-20 X .75	
17	6356GT	WASHER, LOCK, .25	
18	88793GT	PIN,1.5 X 5.50 LG	1
19	825796GT	SNAP RING,EXTERNAL,1.50,ZAG	2
20	18596GT	WASHER,FLAT,1.56 X 2.5 X .061	
21	139384GT	BRACKET, EXTEND SHEAVE	1
22	139288GT	GUIDE, EXT. CABLE, BOTTOM	1
23		Ref. Extension Cylinder (refer to 602.1) (refer to 602.1)	
24	139385GT	GUIDE, EXT CABLE, TOP	1
25	54177GT	SCREW,HHC,1/2-13 X 1.5 GRD 8	2

603.1 Boom Components - View 2

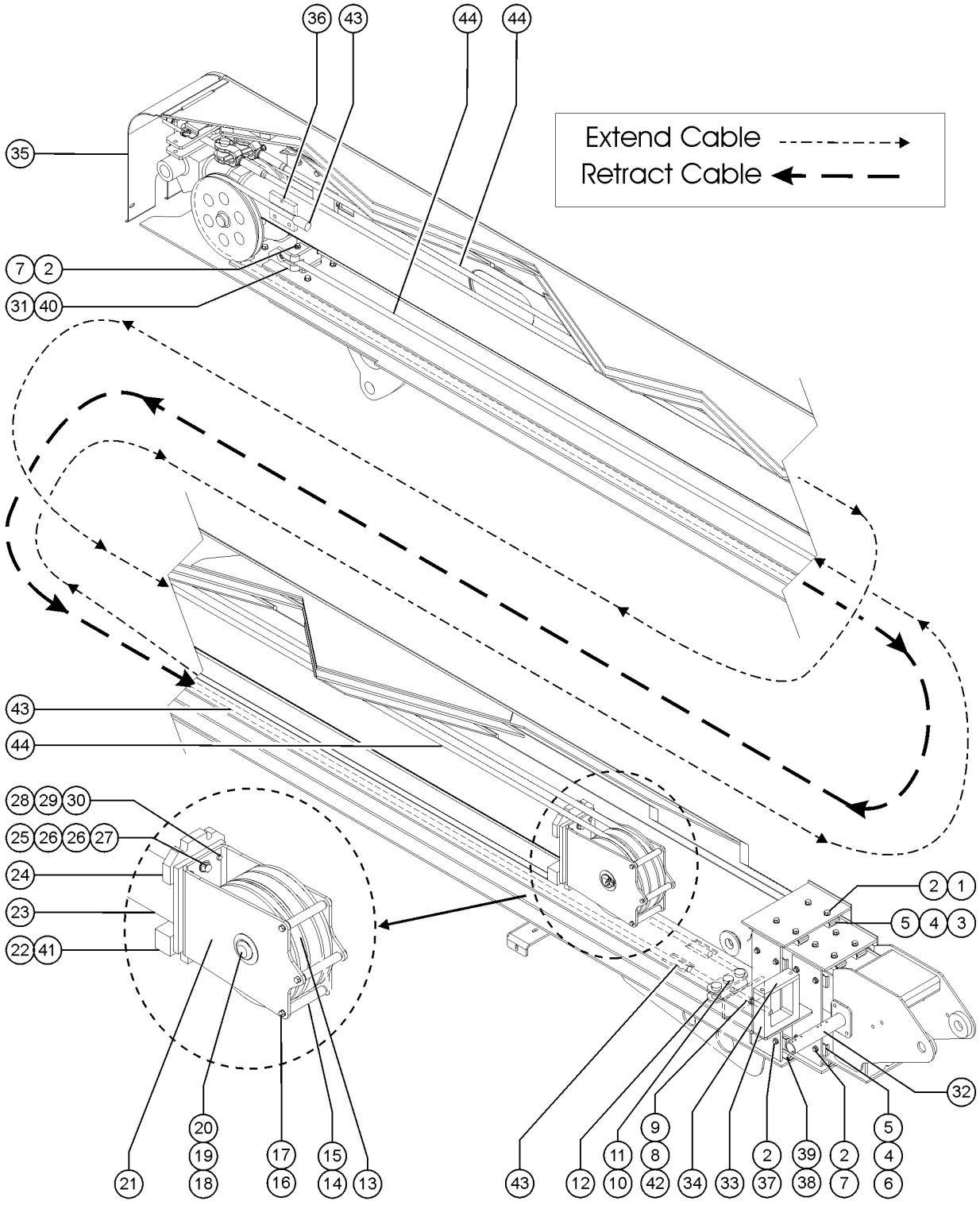

603.1 Boom Components - View 2

Item	Part No.	Description	Qty.
26	49411GT	WASHER,FLAT,M14	
27	6198GT	NUT, NYLOCK, 1/2-13	
28	4266GT	SCREW,HHC,1/4-20 X 2	
29	6638GT	WASHER, FLAT, USS, 1/4"Y	
30	6091GT	NUT,NYLOCK,1/4-20	
31	77688GT	WELDMENT,EXTENSION BRACKET	1
32		WELDMENT,TRACK PULL TUBE PIVOT (refer to 611.1)	1
33		WEAR PAD,CABLE TRACK PULL TUBE (refer to 611.1)	1
34		WEAR PAD,5.5 X 1.75 X .5 (refer to 611.1)	1
35	101066PGT	COVER,PRIMARY BOOM,PAINTED	1
36	77616PGT	PLATE,BOTTOM BLOCK,PAINTED	1
37	57072GT	SCREW,BHHS,3/8-16 X 1.25	
38	34344GT	SHIM, PAD, 3 x 5	4
39	77718GT	WEAR PAD,5 X 3 X .75	4
40	77713PGT	PLATE,TAP BLOCK	1
41	6605GT	SCREW,HHC,3/8-16 X 3.5,GR5	2
42	33278GT	WASHER, FLAT, .75 HARDENED	
43	110340GT	CABLE ASSY, RETRACT SET (PAIR) (one end mounts at the base, the other end mounts at the top of the mast)	1
44	110339GT	CABLE ASSY, EXTEND SET(PAIR) (both ends mount at the base of the mast)	1

604.1 Boom Limit Switch - S-60X, S-60XC and S-60 TraX (ANSI)

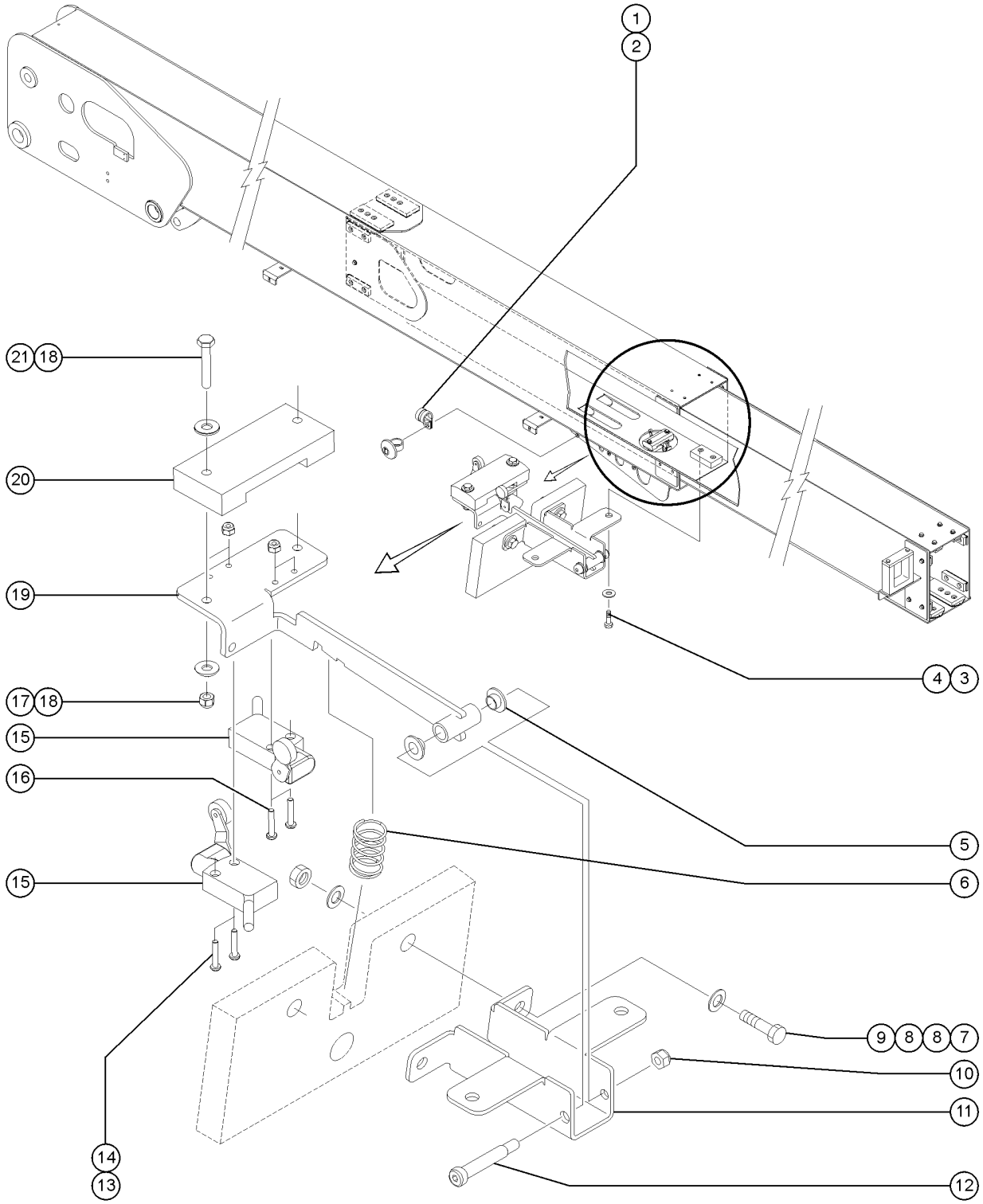

Figure 604.1
Boom #1 Limit Switch

604.1 Boom Limit Switch - S-60X, S-60XC and S-60 TraX (ANSI)

Item	Part No.	Description	Qty.
1	45470GT	CLAMP,0.31,#5 X 1/4,RUB CUSH	1
2	56361GT	CABLE TIE,BUTTON,BLACK,14.75LG	3
3	6019GT	SCREW,HHC,3/8-16 X 1.25 GRD 5	2
4	6021GT	WASHER, LOCK, .375	2
5	47222GT	WASHER, SHOULDER, NYLON	2
6	T112459GT	SPRING,0.984"OD X 1.50"LG	1
7	13918GT	SCREW,HHC,3/8-16 X 1.75,GRD.8	2
8	5397GT	WASHER, FLAT, USS, 5/16-18	4
9	4828GT	NUT, NYLOCK, 3/8-16	2
10	6782GT	NUT, NYLOCK, 5/16-18	1
11	147504GT	COVER, LIMIT SWITCH ARM MOUNT	1
12	147578GT	SCREW,SHC,3/8 X 1.75 SHOULDER	1
13	T106385GT	SCREW,PHILLIPS,PHM,8-32 X 1.00	4
14	18605GT	NUT,NYLOCK,8-32	4
15	139644-14B61GT	LIMIT SWITCH,BLUE,MICRO LSB1ES and LSB1EO, refer to 307.1 for wire harnesses	2
16	T106385GT	SCREW,PHILLIPS,PHM,8-32 X 1.00	2
17	6091GT	NUT,NYLOCK,1/4-20	2
18	6638GT	WASHER, FLAT, USS, 1/4"Y	
19A	230072GT	KIT, LIMIT SWITCH ARM to SN 22586 (upgrade) (includes new items 14, 16 to 21)	1
19B	230329GT	WELDMENT, LIMIT SWITCH ARM from SN 22587	1
20A	230072GT	KIT, LIMIT SWITCH ARM to SN 22586 (upgrade) (includes new items 14, 16 to 21)	1
20B	230331GT	WEARPAD, LIMIT SWITCH GUIDE from SN 22587	1
21	6145GT	SCREW, HHC, 1/4-20 X 1.5	2

605.1 Boom End Components

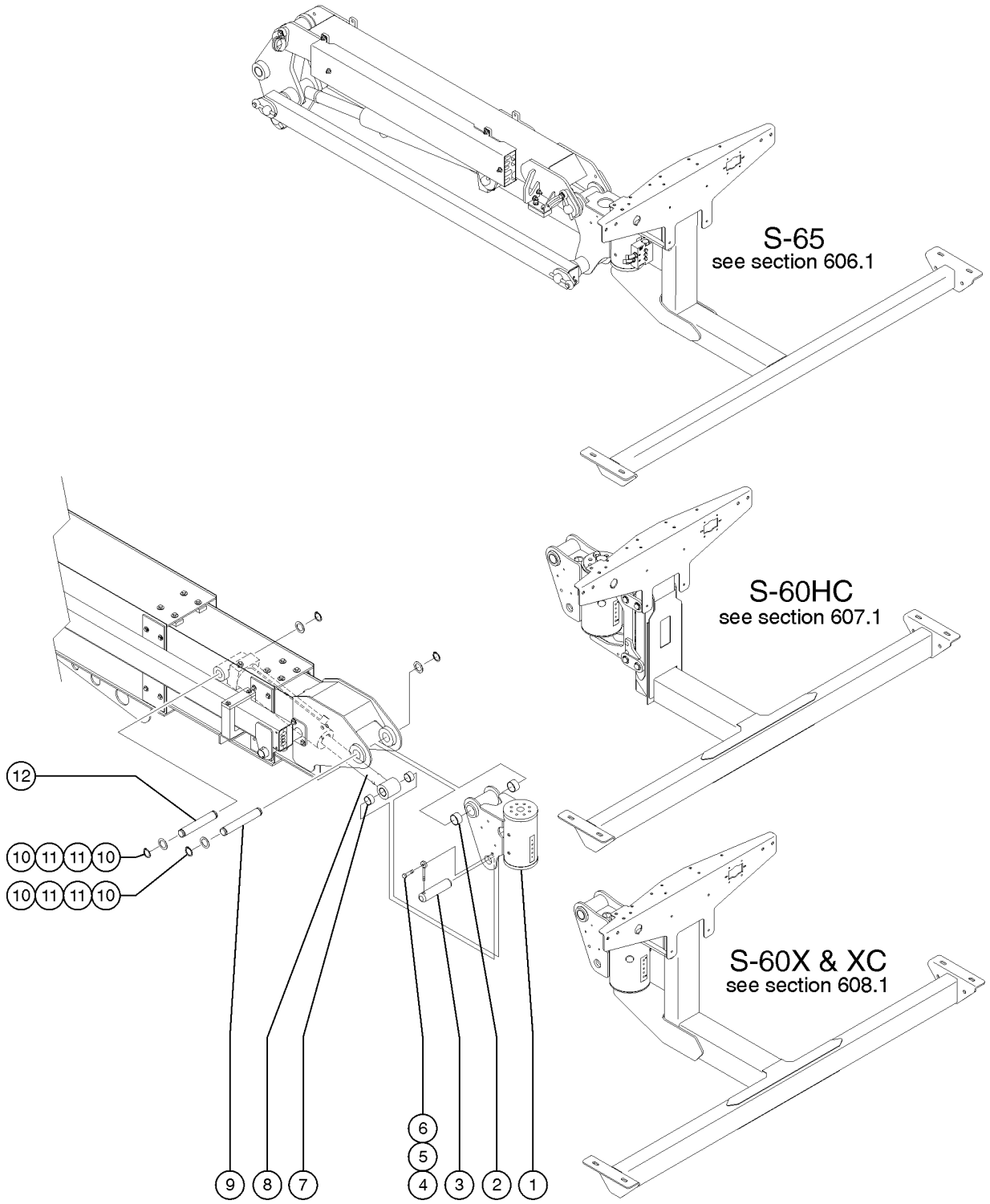

605.1 Boom End Components

Item	Part No.	Description	Qty.
1A	88576GT	ROTATOR,NON-JIB Includes item 2; S-60 CE only	1
1-	122944GT	SEAL KIT,8K ROTATOR***	
1-	88516GT	SCREW,BLEEDER,M5X0.8	
2	30370GT	BEARING,1.25IDX1.5ODX1.00L	4
3	T108075GT	PIN,1.25DIAX5.25LG,1HOLE	1
4	825019GT	ROD END, .375X3.69, ZAG	
5	6175GT	SCREW,HHC,3/8-16 X 1	
6	4828GT	NUT, NYLOCK, 3/8-16	
7	25683GT	BEARING,POLYGON,20DU12	4
8	63566GT	CYLINDER,PLATFORM LEVEL*** Includes item 7	1
8-	101254GT	SEAL KIT (63566)	
8-	77303GT	VALVE, CNTRBAL 3500 PSI, ATM VEN	
9	T111124GT	PIN,1.25DIAX8.42LG,2RING (replaced 88345 at 21174)	1
10	30217GT	SNAP RING,EXTERNAL,1.25 DIA.**	4
11	30255GT	WASHER,SHIM,1.27 X 2.13 X .062 as needed	
12	88870GT	PIN,1.25DIAX7.47LG,2RING	1

606.1 Boom End Components - S-65

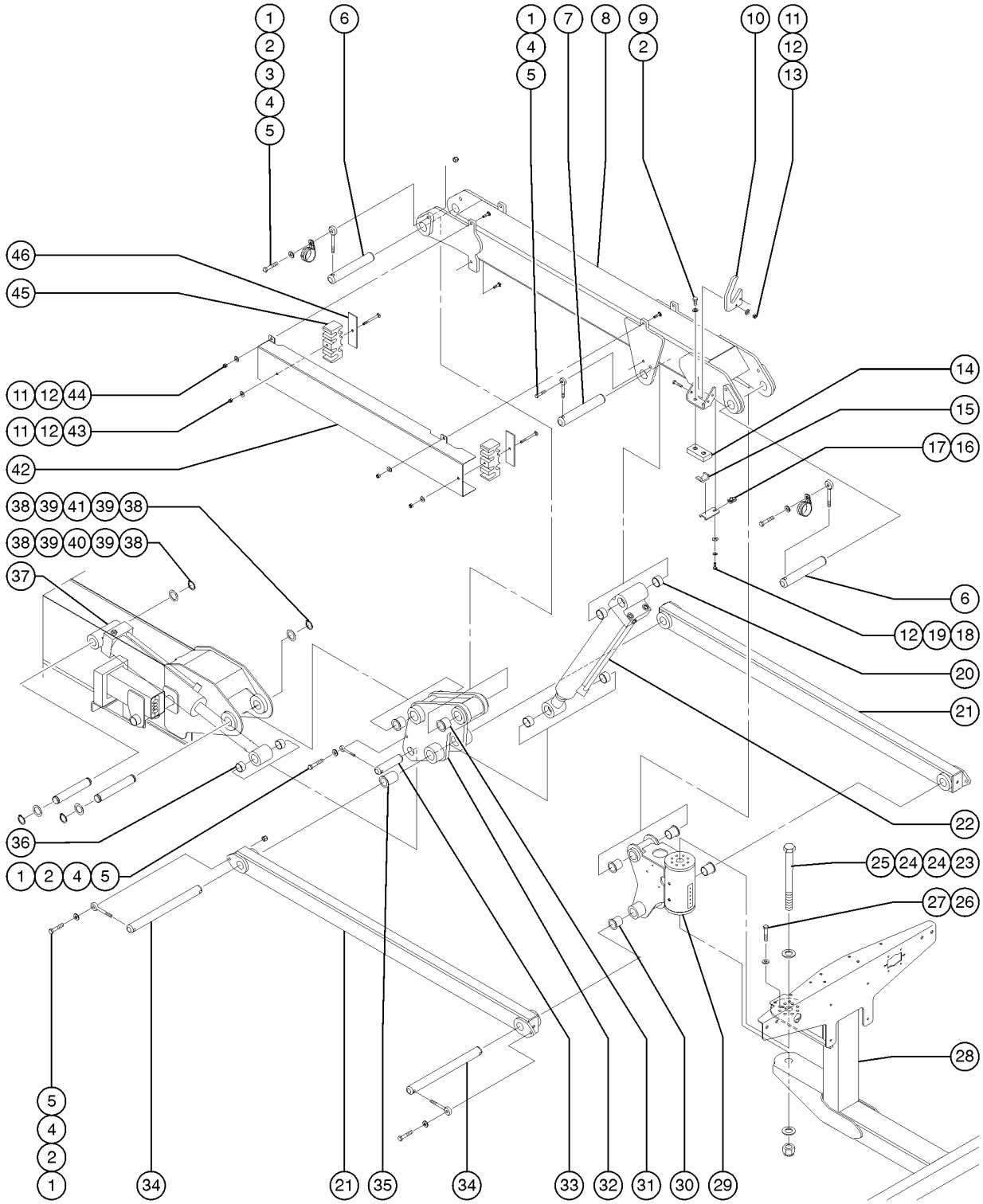

Item	Part No.	Description	Qty.
1	6175GT	SCREW,HHC,3/8-16 X 1	
2	6021GT	WASHER, LOCK, .375	
3	77181GT	CLAMP,1.63,#26 X 3/8,RUB CUSH	2
4	825019GT	ROD END, .375X3.69, ZAG	
5	4828GT	NUT, NYLOCK, 3/8-16	
6	T108076GT	PIN,1.25DIAX7.88LG,1HOLE	2
7	T108077GT	PIN,1.25DIAX7.00LG,1HOLE	1
8B	128534GT	JIB BOOM ASSY W/WORD DECAL USA, Canada and Australia models, includes item 8A	1
8C	T108892GT	JIB BOOM ASSY W/SYMBOL DECAL South America, Asia and Europe models, includes item 8A	
9	8255GT	SCREW,HHC,3/8-16 X .75	
10	128482GT	HOSE GUIDE, JIB to SN S6015A-29311	1
11	6091GT	NUT,NYLOCK,1/4-20	
12	6638GT	WASHER, FLAT, USS, 1/4"Y	
13	8915GT	SCREW, HHC, 1/4-20 X 1.25	
14	81640GT	WEAR PAD,3 X 1.5 X.625 W/NUTS	
15	119542GT	CLAMP,TWO HOSE	1
16	56912GT	SPRING CLIP,1/4-20,.025-.15X.54,ZAG	1
17	119536PGT	BRACKET,HOSE CLAMP,PAINTED	1
18	6090GT	SCREW, HHC, 1/4-20 X .75	
19	6356GT	WASHER, LOCK, .25	
20	25683GT	BEARING,POLYGON,20DU12	4
21	61306-SGT	COMPR.LINK,MACHINED,GND CONTR*	2
22	63213GT	CYLINDER,JIB (STICK BOOMS) includes item 20	1
22-	33428GT	VALVE,COUNTERBALANCE	
22-	63353GT	SEAL KIT,CYL,S65 (63213)	
23	73928GT	SCREW,HHC,1-8 X 11,GRD 5***	1
24	122079GT	WASHER,FLAT,1.000,HARDENED	2
25	29764GT	NUT,NYLOCK,1-8	1

606.1 Boom End Components - S-65

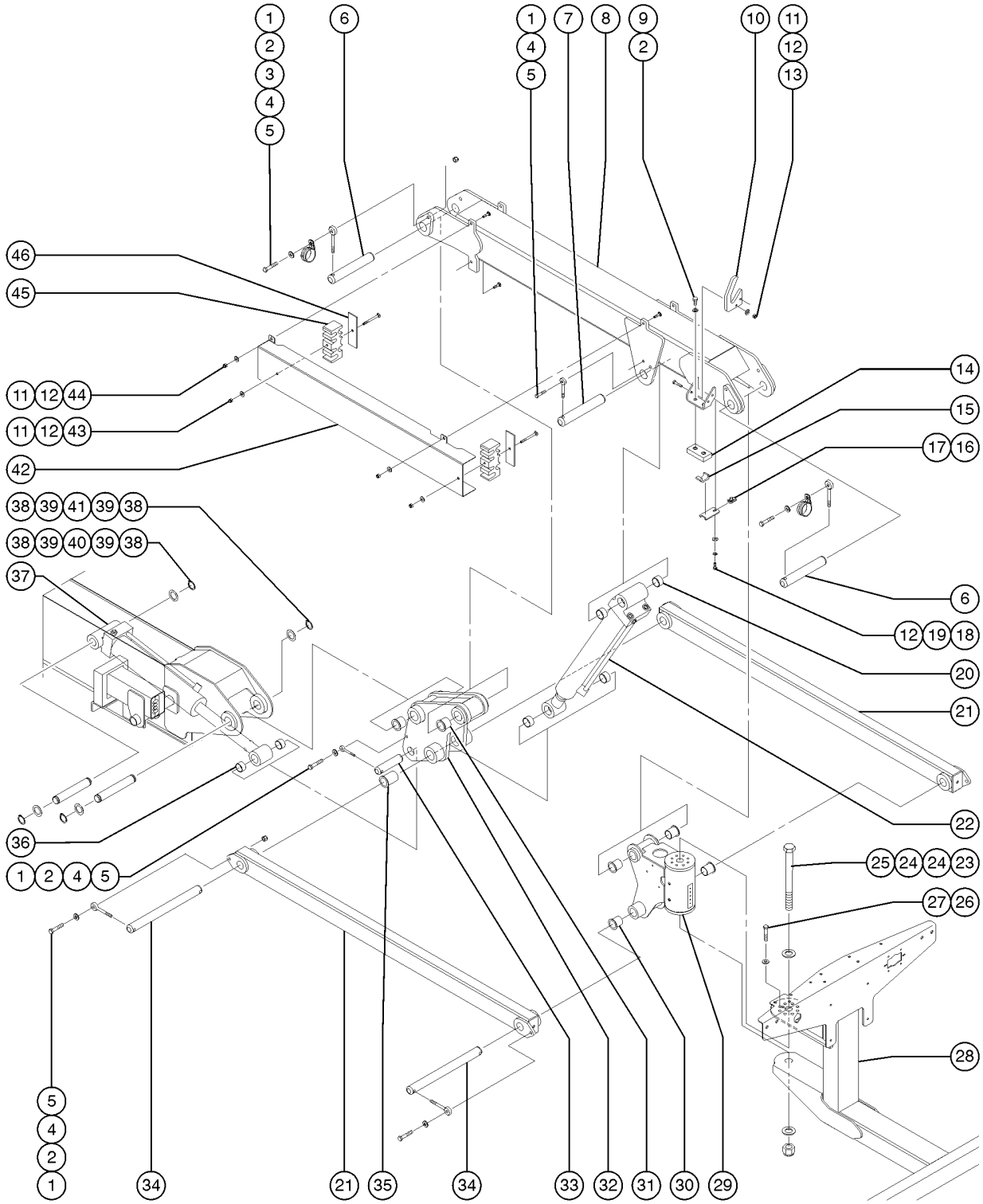

Item	Part No.	Description	Qty.
26	77692GT	SCREW,HHC,3/8-16 X 1 GRD 8	8
27	6097GT	WASHER, FLAT, USS, 3/8", Y	8
28	60370-SGT	PLATFORM SUPPORT WELDMNT-SERV*	1
29	94397GT	ROTATOR,PLAT JIB,160 DEG*** includes bearing item 30	1
29-	122944GT	SEAL KIT,8K ROTATOR*** for 94397	
29-	88516GT	SCREW,BLEEDER,M5X0.8 for 94397	
29-	75395GT	BEARING KIT,PLAT ROTATOR,SUPER for 94397	
30	30222GT	BEARING,FL,1.25IDX1.41ODX1.50L	4
31	35675GT	BEARING,FL,1.25IDX1.5ODX1.25L	4
32	101244GT	BELLCRANK W/BEARINGS includes bearings item 31 and 35	1
33	T108075GT	PIN,1.25DIAX5.25LG,1HOLE	1
34	81175GT	PIN,1.25DIAX14.45LG,2HOLE	2
35	128268GT	BEARING,FL, 1.25X1.5X2.13	2
36	25683GT	BEARING,POLYGON,20DU12	4
37	63566GT	CYLINDER,PLATFORM LEVEL*** Includes item 7	1
37-	101254GT	SEAL KIT (63566)	
37-	77303GT	VALVE, CNTRBAL 3500 PSI, ATM VEN	
38	30217GT	SNAP RING,EXTERNAL,1.25 DIA.**	4
39	30255GT	WASHER,SHIM,1.27 X 2.13 X .062	as-needed
40	88870GT	PIN,1.25DIAX7.47LG,2RING	1
41	T111124GT	PIN,1.25DIAX8.42LG,2RING	1
42	128454PGT	COVER, JIB HOSES/CABLES	1
43	128724GT	BOLT,CARRIAGE,1/4-20 X 2.75,G2	2
44	79456GT	BOLT,CARRIAGE,1/4-20 X 1.00,G2	4
45	824551GT	CLAMP,HOSE/CABLE,JIB	2
46	128483GT	BACKING PLATE, HOSE BLOCK, JIB	2

607.1 Boom End Components - S-60 HC

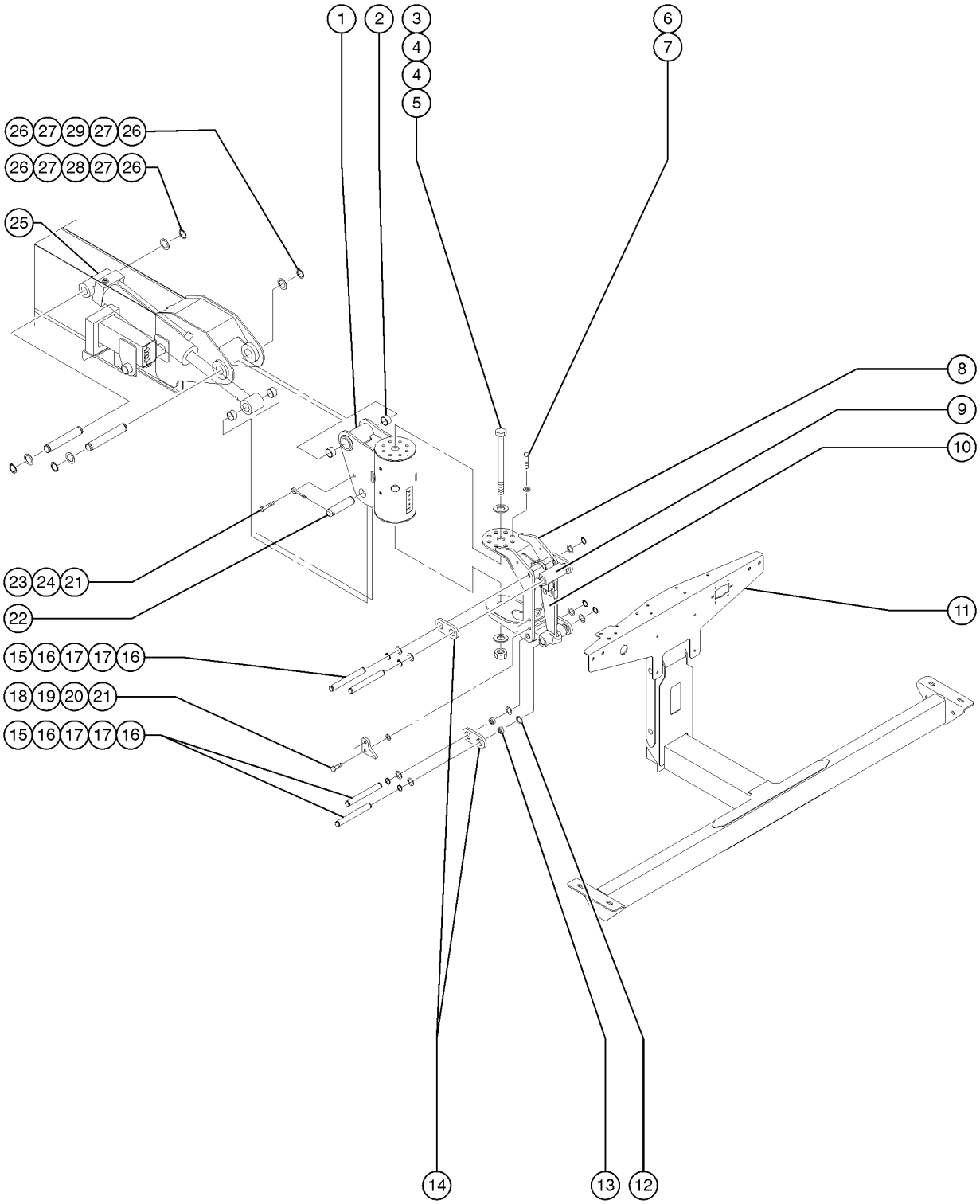

Item	Part No.	Description	Qty.
1	226541GT	ROTATOR,PLATFORM,15K includes item 2	1
1-	226542GT	SEAL KIT, 15K ROTATOR for 226541; from SN 21919	
1-	147370GT	SEAL KIT,15K ROTATOR for 107836; to SN 21918	
2	30370GT	BEARING,1.25IDX1.5ODX1.00L	2
3	824075GT	SCREW, HHC, 1-8 X 12.75, 5, ZAG	
4	122079GT	WASHER,FLAT,1.000,HARDENED	2
5	123143GT	NUT,NYLOCK,1-8,GR8	1
6	123663GT	SCREW,HHC,1/2-13X1.25,GR8,Y	8
7	13066GT	WASHER,FLAT,.5 HARDENED	8
8		WELDMENT,ROTATOR MOUNT no longer available	1
9	119230GT	MACH,PLATE,LOAD SUPPORT	1
10	106766GT	LOAD CELL FLEXURE	2
11	106399GT	WELDMENT,PLATFORM SUPPORT	1
12	110789GT	WASHER,SHIM .0151 THK.	as-needed
13	25685GT	BEARING,GARLOCK,12FDU12	8
14	110784GT	MACHINED,LOAD CELL LINK	1
14-	825020GT	ROD END, .25 X 2.75, ZAG	
15	110785GT	PIN,.75DIA X 6.38 LG,2RING	4
16	10262GT	SNAP RING,EXTERNAL,.75 DIA.	8
17	6563GT	WASHER,SHIM,.75 X 1.125 X.030	as-needed
18	8516GT	SCREW, HCC, 3/8-16 X 1.50	2
19	139248GT	MACH.,PLATE,STOP	2
20	7268GT	WASHER,SHIM,.375 X.625X.033 ST	4
21	4828GT	NUT, NYLOCK, 3/8-16	2
22	T108075GT	PIN,1.25DIAX5.25LG,1HOLE	1
23	6175GT	SCREW,HHC,3/8-16 X 1	1
24	825019GT	ROD END, .375X3.69, ZAG	1

607.1 Boom End Components - S-60 HC

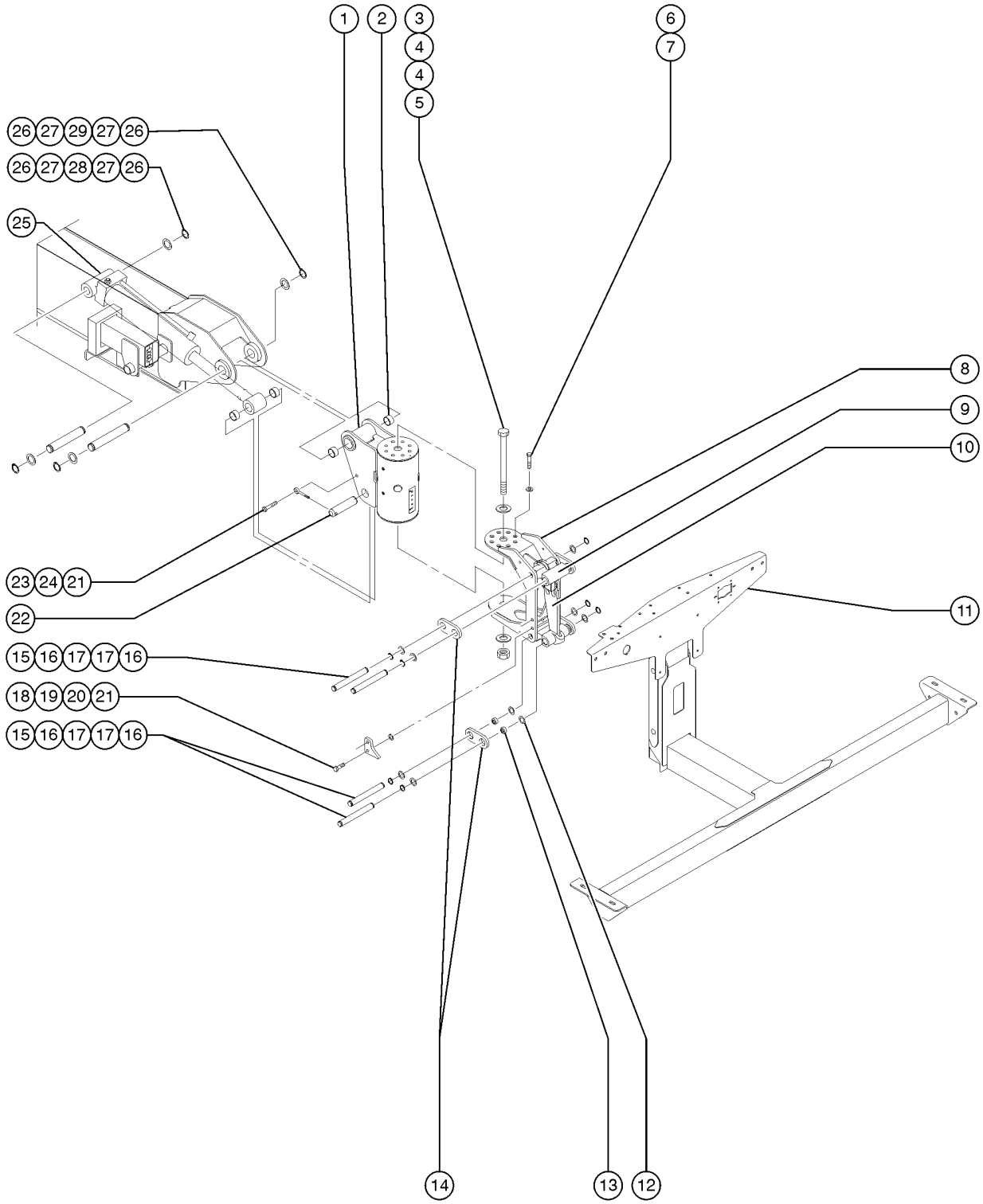

Item	Part No.	Description	Qty.
25	63566GT	CYLINDER,PLATFORM LEVEL***	1
25-	101254GT	SEAL KIT (63566)	
25-	25683GT	BEARING,POLYGON,20DU12	4
25-	77303GT	VALVE, CNTRBAL 3500 PSI, ATM VEN	
26	30217GT	SNAP RING,EXTERNAL,1.25 DIA.**	4
27	30255GT	WASHER,SHIM,1.27 X 2.13 X .062	as-needed
28	88870GT	PIN,1.25DIAX7.47LG,2RING	1
29	T111124GT	PIN,1.25DIAX8.42LG,2RING	1

608.1 Boom End Components - S-60X and S-60XC

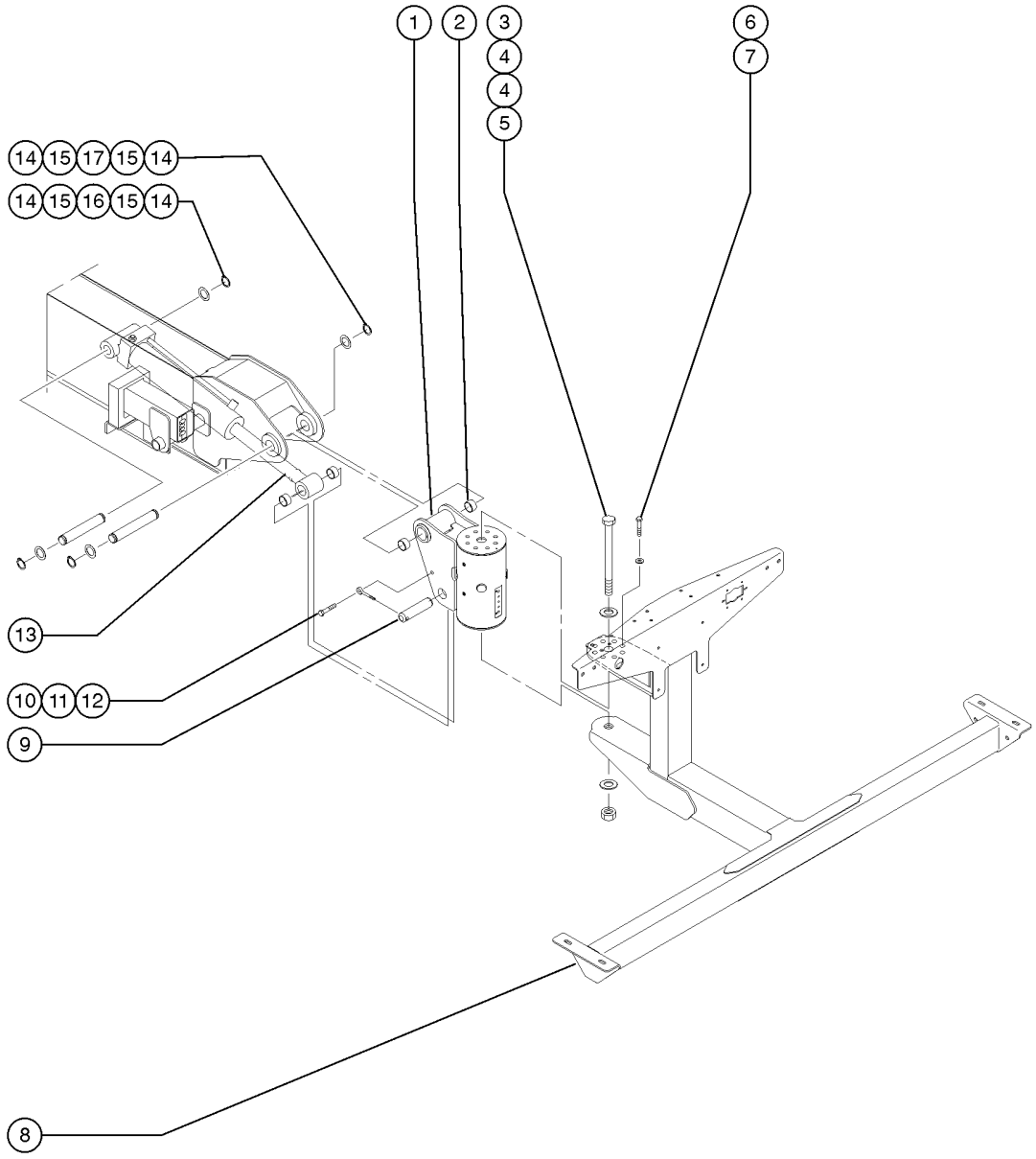

Item	Part No.	Description	Qty.
1	226541GT	ROTATOR,PLATFORM,15K includes item 2	1
1-	226542GT	SEAL KIT, 15K ROTATOR for 226541	
2	30370GT	BEARING,1.25IDX1.5ODX1.00L	2
3	824075GT	SCREW, HHC, 1-8 X 12.75, 5, ZAG	
4	122079GT	WASHER,FLAT,1.000,HARDENED	2
5	123143GT	NUT,NYLOCK,1-8,GR8	1
6	123663GT	SCREW,HHC,1/2-13X1.25,GR8,Y	8
7	13066GT	WASHER,FLAT,.5 HARDENED	8
8A	147347GT	WELDMENT, PLAT SUPPORT 6ft and 8ft platforms	1
8B	234242GT	WDMT,4FT/5FT PLAT. SUPPORT,15K 4ft and 5FT Platforms	1
9	T108075GT	PIN,1.25DIAX5.25LG,1HOLE	1
10	8516GT	SCREW, HCC, 3/8-16 X 1.50	1
11	825019GT	ROD END, .375X3.69, ZAG	1
12	4828GT	NUT, NYLOCK, 3/8-16	1
13	63566GT	CYLINDER,PLATFORM LEVEL***	1
13-	101254GT	SEAL KIT (63566)	
13-	25683GT	BEARING,POLYGON,20DU12	4
13-	77303GT	VALVE, CNTRBAL 3500 PSI, ATM VEN	
14	30217GT	SNAP RING,EXTERNAL,1.25 DIA.**	4
15	30255GT	WASHER,SHIM,1.27 X 2.13 X .062	as-needed
16	88870GT	PIN,1.25DIAX7.47LG,2RING	1
17	T111124GT	PIN,1.25DIAX8.42LG,2RING	1

609.1 Boom End Components - S-60 and S-65 CE Load Sense

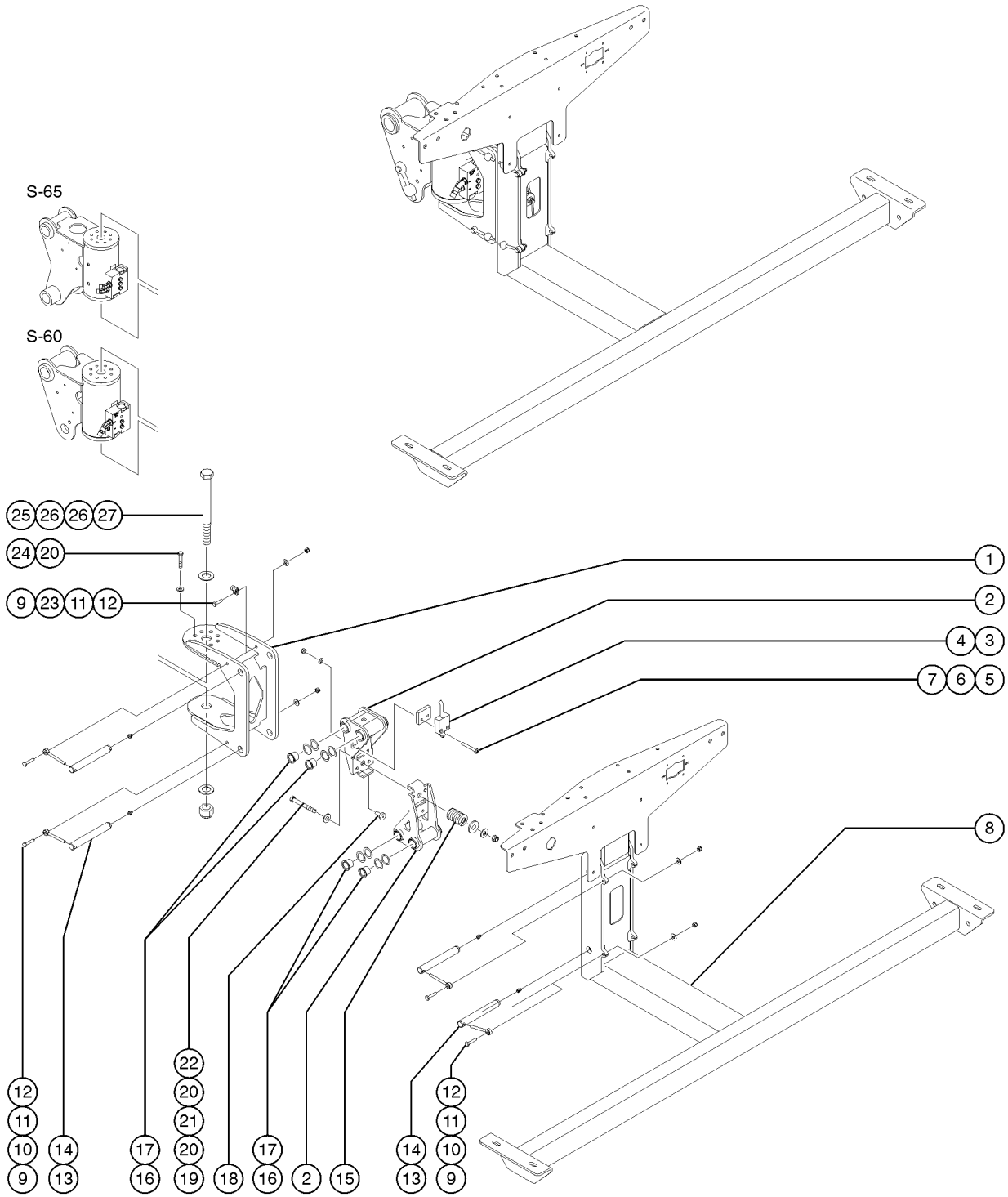

Item	Part No.	Description	Qty.
1	101845GT	ROTATOR MOUNT KIT	1
1-	61804GT	WELDMENT,ROTATOR SUPPORT	
2	89755GT	LOAD SUPPORT W/BEARINGS	2
3	121848GT	ASSY,LS,LOAD SENSE,38.5 IN	1
4	61972GT	MOUNT,SWITCH	1
5	73634GT	SCREW,PHIL,PHM,10-24X1.5 ZINC	2
6	6146GT	WASHER,FLAT,MS,#10,Y	2
7	5365GT	NUT,NYLOCK,10-24	2
8A	60370-SGT	PLATFORM SUPPORT WELDMNT-SERV* ANSI models	1
8B	61997GT	WELDMENT,PLATFORM SUPPORT,CE CE models	1
8C	94326GT	WELDMENT,4/5FT PLATFORM SUPPOR 4 ft. & 5 ft. platforms only	1
9	6888GT	SCREW, HHC, 1/4-20 X 1	
10	825020GT	ROD END, .25 X 2.75, ZAG	
11	6638GT	WASHER, FLAT, USS, 1/4"Y	
12	6091GT	NUT,NYLOCK,1/4-20	
13	61726GT	PIN,0.75DIAX5.75LG,CHAMFER	4
14	28646GT	ZERK,GREASE,1/8 NPT	4
15	61974GT	SPRING,COMP,1" OD,232 LB/IN	1
16	25685GT	BEARING,GARLOCK,12FDU12	8
17	110789GT	WASHER,SHIM .0151 THK.	as-needed
18	34619GT	BUMPER,RUBBER***	2
19	21604GT	SCREW,HHC,3/8-16 X 3.25	
20	6097GT	WASHER, FLAT, USS, 3/8", Y	
21	61975GT	RETAINER,SPRING,1.21 X .375	1
22	4828GT	NUT, NYLOCK, 3/8-16	
23	45470GT	CLAMP,0.31,#5 X 1/4,RUB CUSH	1
24	77692GT	SCREW,HHC,3/8-16 X 1 GRD 8	8

609.1 Boom End Components - S-60 and S-65 CE Load Sense

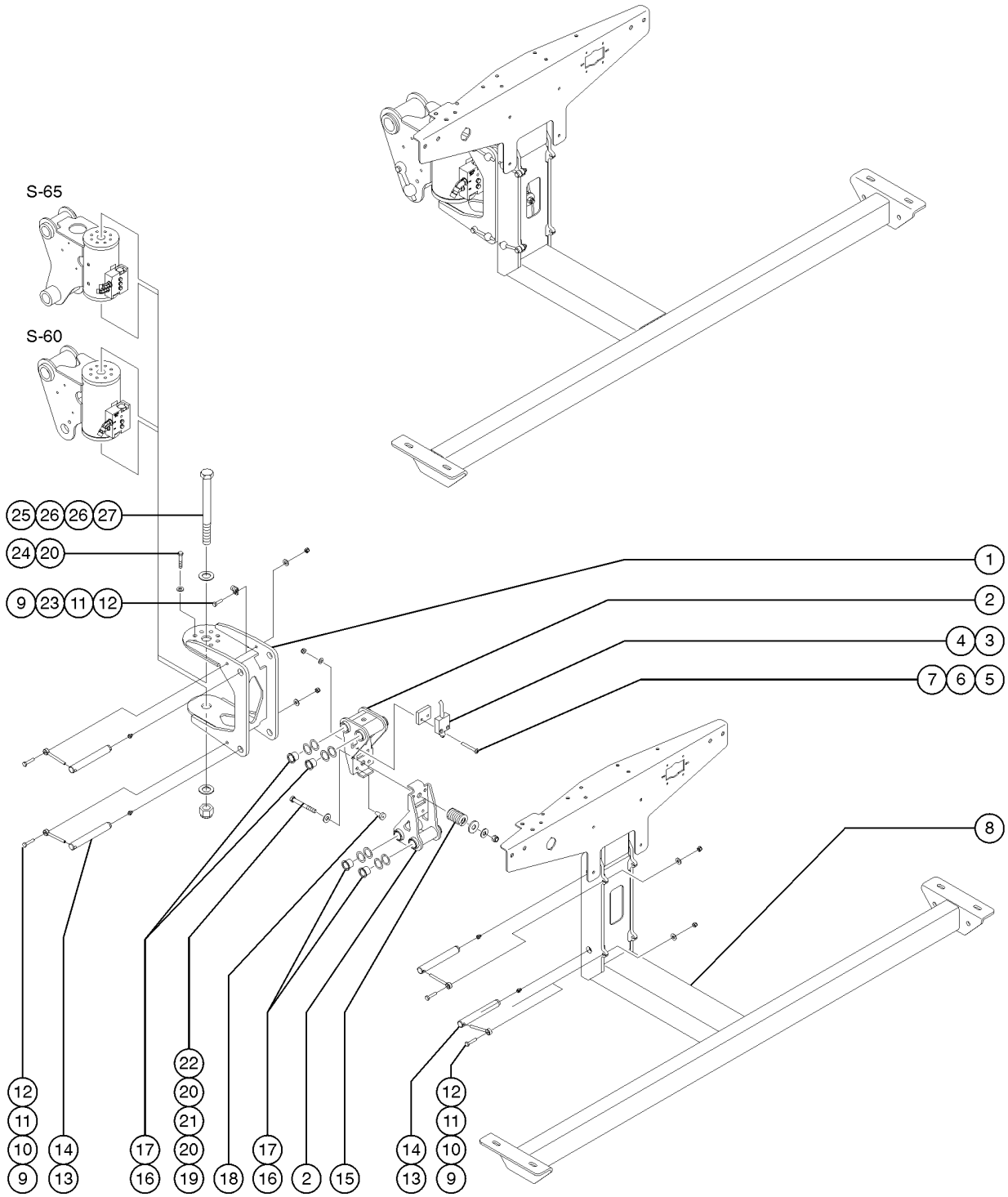

Item	Part No.	Description	Qty.
25	73928GT	SCREW,HHC,1-8 X 11,GRD 5***	1
26	122079GT	WASHER,FLAT,1.000,HARDENED	2
27	29764GT	NUT,NYLOCK,1-8	1

610.1 S-60 HC Primary Boom Components

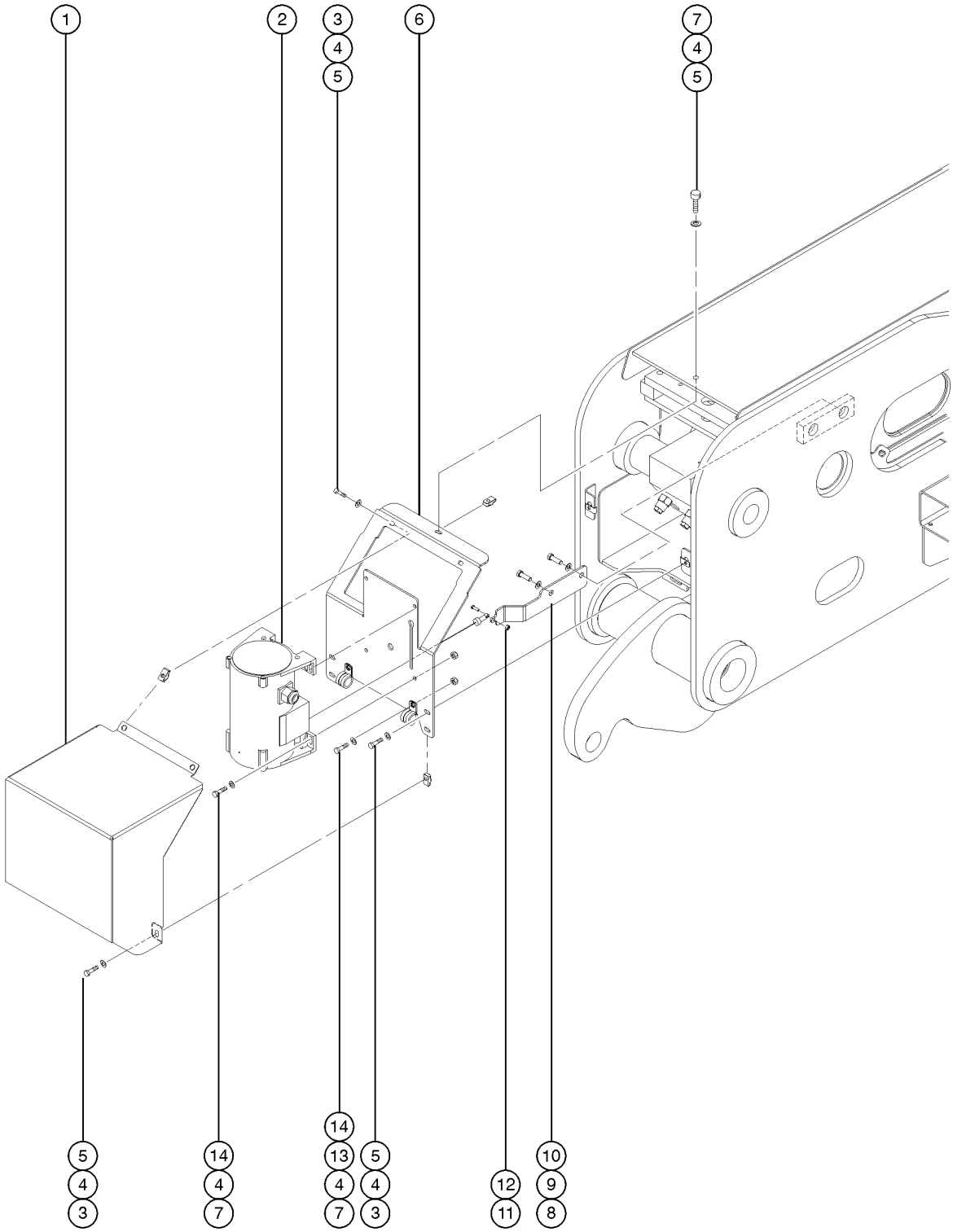

Item	Part No.	Description	Qty.
1	119537GT	COVER, STRING POT, S60HC***	1
2	139293GT	POSITION TRANSDUCER,LINEAR,2CH	1
3	6090GT	SCREW, HHC, 1/4-20 X .75	
4	6638GT	WASHER, FLAT, USS, 1/4"Y	
5	56912GT	SPRING CLIP,1/4-20,.025-.15X.54,ZAG	4
6	119535GT	MOUNT, STRING POT, S60HC	1
7	6888GT	SCREW, HHC, 1/4-20 X 1	
8	139307GT	FORMING, CABLE ANCHOR	1
9	6021GT	WASHER, LOCK, .375	
10	6019GT	SCREW,HHC,3/8-16 X 1.25 GRD 5	
11	49826GT	SCREW,PHILLIPS,PHM,10-32 X.625	
12	6178GT	NUT, NYLOCK, 10-32	
13	45454GT	CLAMP,0.75,#12 X 3/8,RUB CUSH*	2
14	6091GT	NUT,NYLOCK,1/4-20	

611.1 Cable Track (to SN 22585)

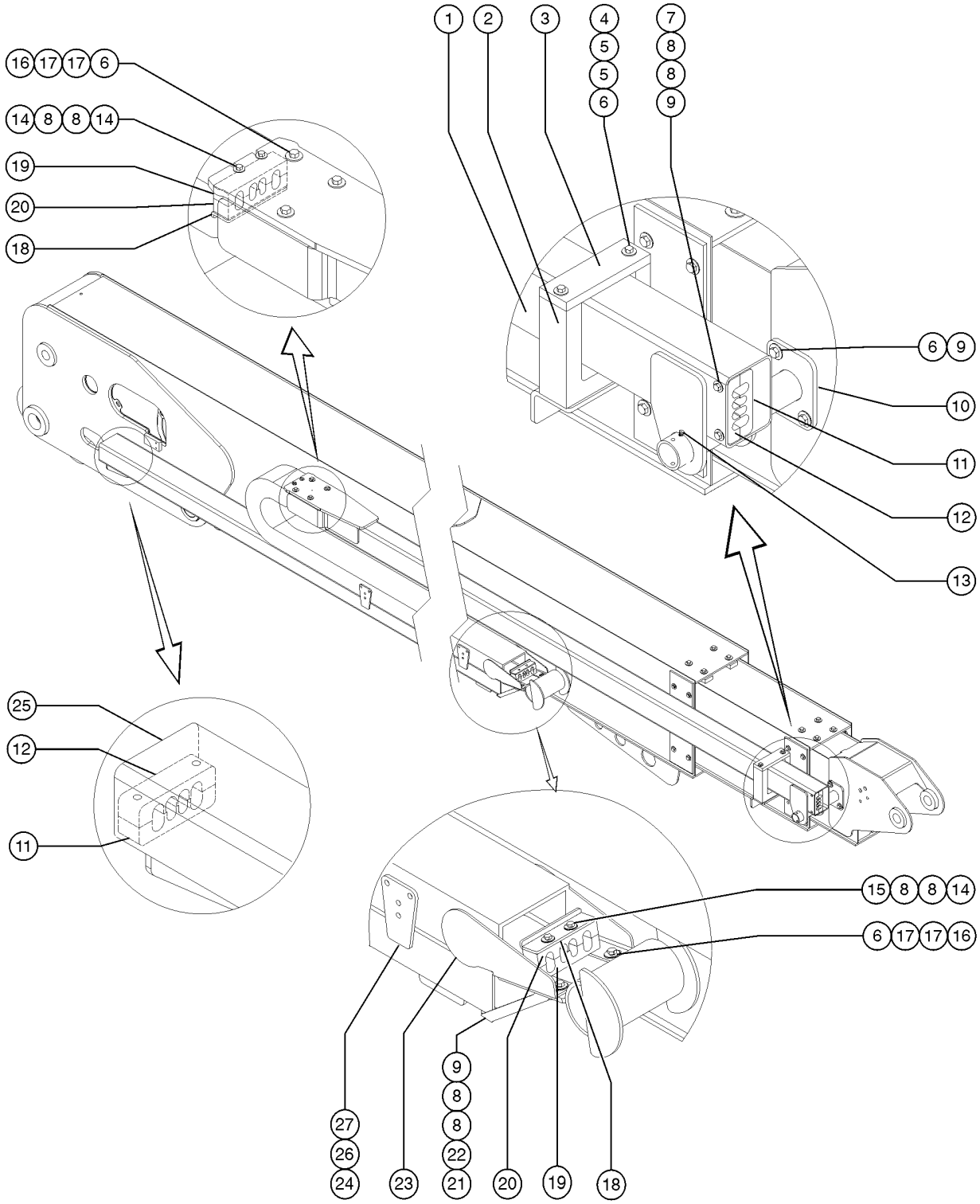

611.1 Cable Track (to SN 22585)

Item	Part No.	Description	Qty.
1	88859GT	WELDMENT,CABLE TRACK TUBE***	1
2	81341GT	WEAR PAD,CABLE TRACK PULL TUBE	1
3	81342GT	WEAR PAD,5.5 X 1.75 X .5	1
4	81777GT	SCREW,HHC,3/8-16 X 7	
5	6097GT	WASHER, FLAT, USS, 3/8", Y	
6	4828GT	NUT, NYLOCK, 3/8-16	
7	8179GT	SCREW,HHC,1/4-20 X 2.25	
8	6638GT	WASHER, FLAT, USS, 1/4"Y	
9	6091GT	NUT,NYLOCK,1/4-20	
10	81347GT	WELDMENT,TRACK PULL TUBE PIVOT	1
11	139790GT	CLAMP, PULL TUBE	
12	88514GT	CABLE STAY,TOP***	2
13	13635-10GT	PIN,COTTER,.156 X 1.75	1
14	6884GT	SCREW,HHC,1/4-20 X 2.5	
15	6889GT	NUT,LP NYLOCK,1/4-20	
16	6019GT	SCREW,HHC,3/8-16 X 1.25 GRD 5	
17	6097GT	WASHER, FLAT, USS, 3/8", Y	
18	107868PGT	PLATE,REINF.CLAMP STACK,PTD	1
19	119838GT	CLAMP, HOSE, PRIM.	2
20	139791GT	CLAMP, CABLE TRACK, SUPPORT	
21	1264258GT	FORMING, TRACK BRACE, LH outboard bracket; furthest from boom tube (shown)	1
21	1264257GT	FORMING, TRACK BRACE, RH inboard bracket; closest to boom tube	
22	6090GT	SCREW, HHC, 1/4-20 X .75	
23A	88705GT	CABLE TRACK,STEEL 49 LINKS*** no longer available, use kit 226327	1
23A-	77896GT	ASSY,FOUR LINK CABLE TRACK*** FOR 88705	
23A-	58308GT	ROLLER,ALUM TUBE,ST.TRK*** for 58309	
23A-	58310GT	SCREW,10-24 X.5 TORX PAN HD*** for 58308	
23A-	58309GT	ROLLER,POLY,STEEL TRACK*** for 88705	

611.1 Cable Track (to SN 22585)

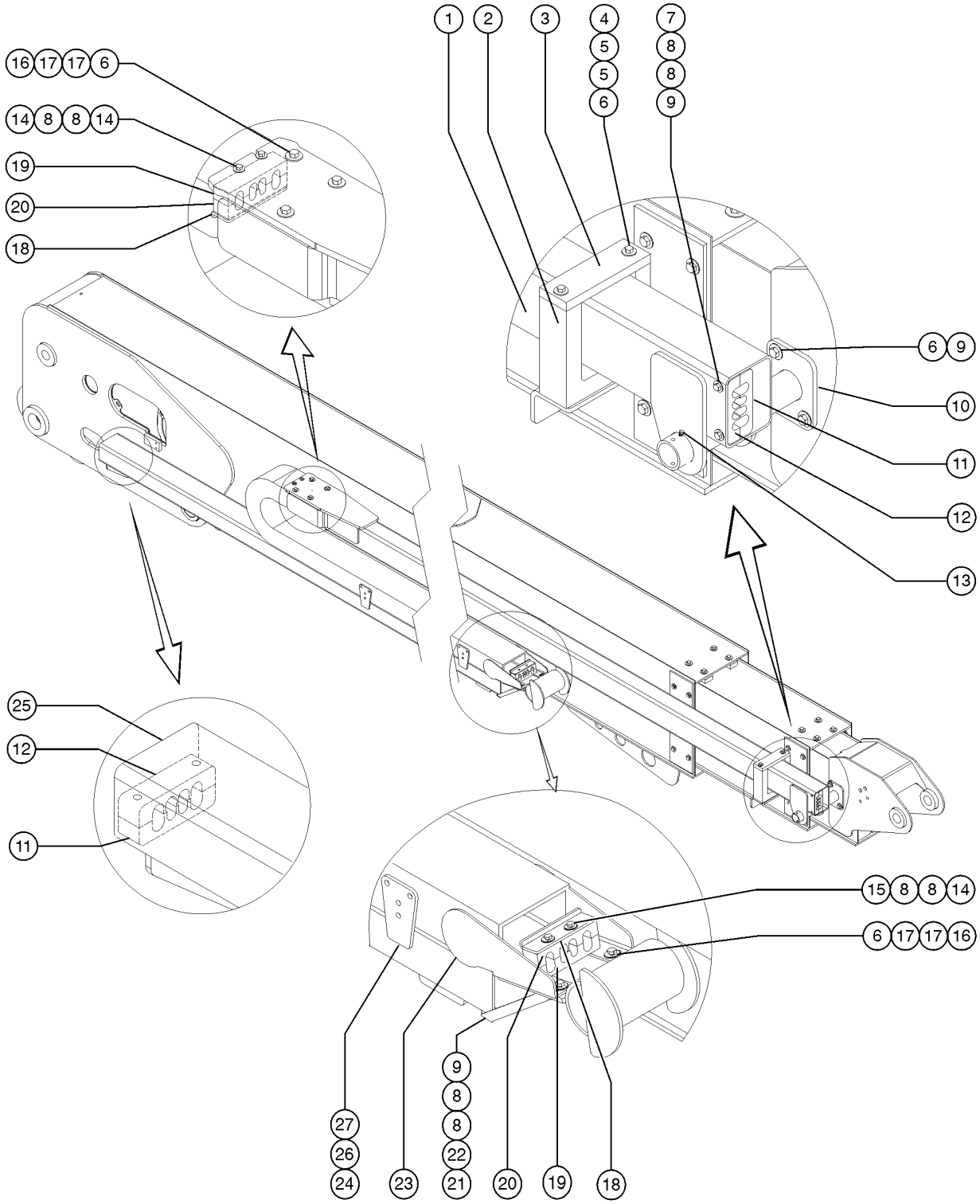

611.1 Cable Track (to SN 22585)

Item	Part No.	Description	Qty.
23A-	102216GT	BRACKET,CABLE TRACK,MOVING END for 88705	
23A-	102215GT	BRACKET,CABLE TRACK,FIXED END* for 88705	
23A-	106154GT	KIT,PIN & RING*** for 88705	
23A-	231653GT	KIT,CABLE TRAK FLAT BAR for 88705	
24	70264GT	CABLE TRACK GUIDE TRIANGLE	10
24-	58310GT	SCREW,10-24 X.5 TORX PAN HD*** for 70264	
25	88858GT	WELDMENT,CABLE TRACK TRAY***	1
26	39317GT	STOP PLATFORM ROLLER	
27	87085GT	RIVET,ALUM,P,.188 X .25	

611.2 Cable Track (from SN 22586)

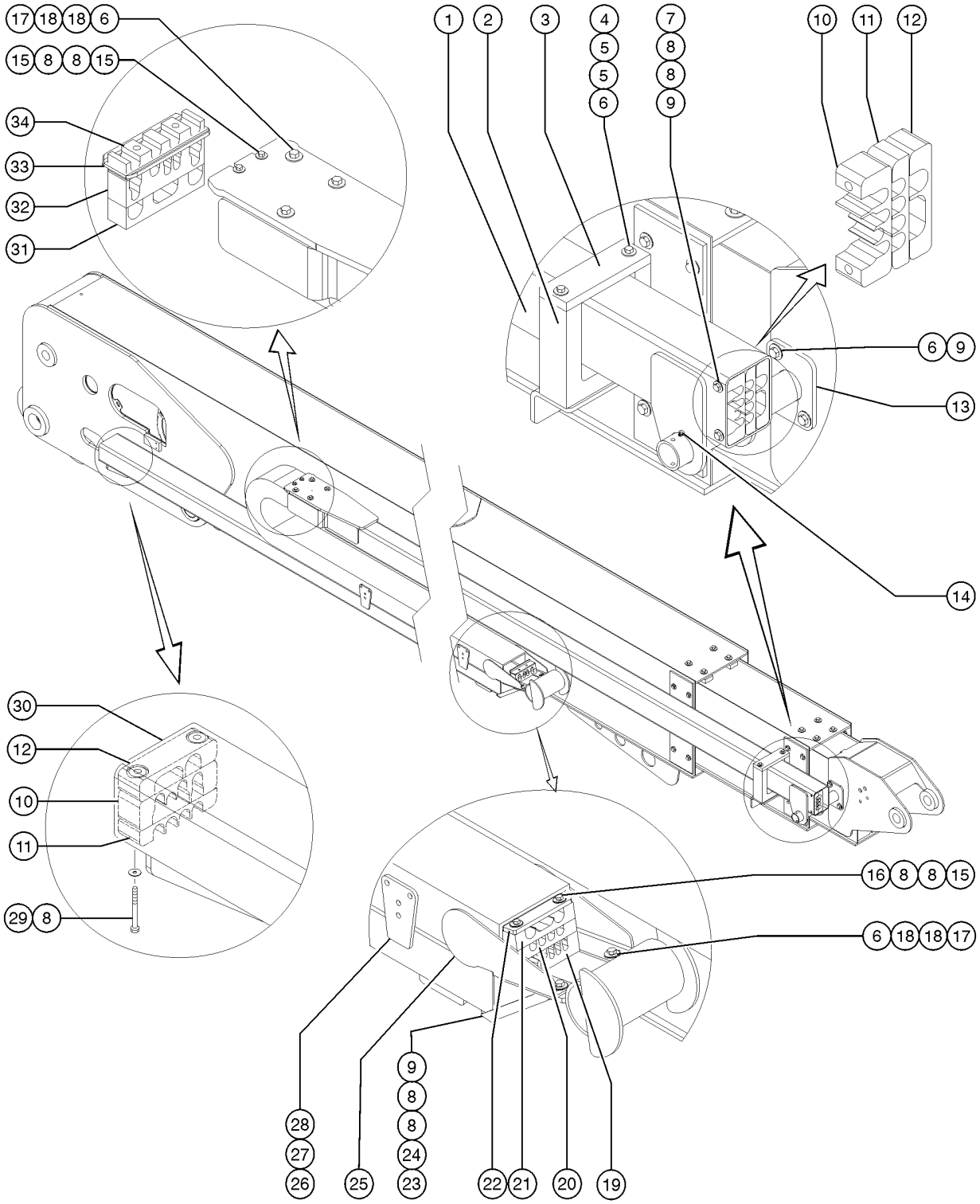

611.2 Cable Track (from SN 22586)

Item	Part No.	Description	Qty.
1	88859GT	WELDMENT,CABLE TRACK TUBE***	1
2	81341GT	WEAR PAD,CABLE TRACK PULL TUBE	1
3	81342GT	WEAR PAD,5.5 X 1.75 X .5	1
4	81777GT	SCREW,HHC,3/8-16 X 7	
5	6097GT	WASHER, FLAT, USS, 3/8", Y	
6	4828GT	NUT, NYLOCK, 3/8-16	
7	8179GT	SCREW,HHC,1/4-20 X 2.25	
8	6638GT	WASHER, FLAT, USS, 1/4"Y	
9	6091GT	NUT,NYLOCK,1/4-20	
10A	227307GT	CLAMP, CABLES to SN 26286	2
10B	824547GT	CLAMP, CABLES from SN 26287	2
11	227308GT	CLAMP, HOSES	2
12	227306GT	CLAMP ASSY,OPTIONS BLOCK W/NUT (weld cable option)	2
13	81347GT	WELDMENT,TRACK PULL TUBE PIVOT	1
14	13635-10GT	PIN,COTTER,.156 X 1.75	1
15	6884GT	SCREW,HHC,1/4-20 X 2.5	
16	6889GT	NUT,LP NYLOCK,1/4-20	
17	6019GT	SCREW,HHC,3/8-16 X 1.25 GRD 5	
18	6097GT	WASHER, FLAT, USS, 3/8", Y	
19A	226325GT	CLAMP, HOSES to SN 26286	1
19B	824548GT	CLAMP, CABLES from SN 26287	1
20	226325GT	CLAMP, HOSES	1
21	228796GT	CLAMP, OPTIONS, CABLE TRACK (weld cable option)	1
22	228797GT	BAR, CLAMP, CABLE TRACK	1
23A	1264258GT	FORMING, TRACK BRACE, LH outboard bracket; furthest from boom tube (shown)	1
23B	1264257GT	FORMING, TRACK BRACE, RH inboard bracket; closest to boom tube	1
24	6090GT	SCREW, HHC, 1/4-20 X .75	
25	T114223GT	CABLE TRACK, SX, 49 LINK	1

611.2 Cable Track (from SN 22586)

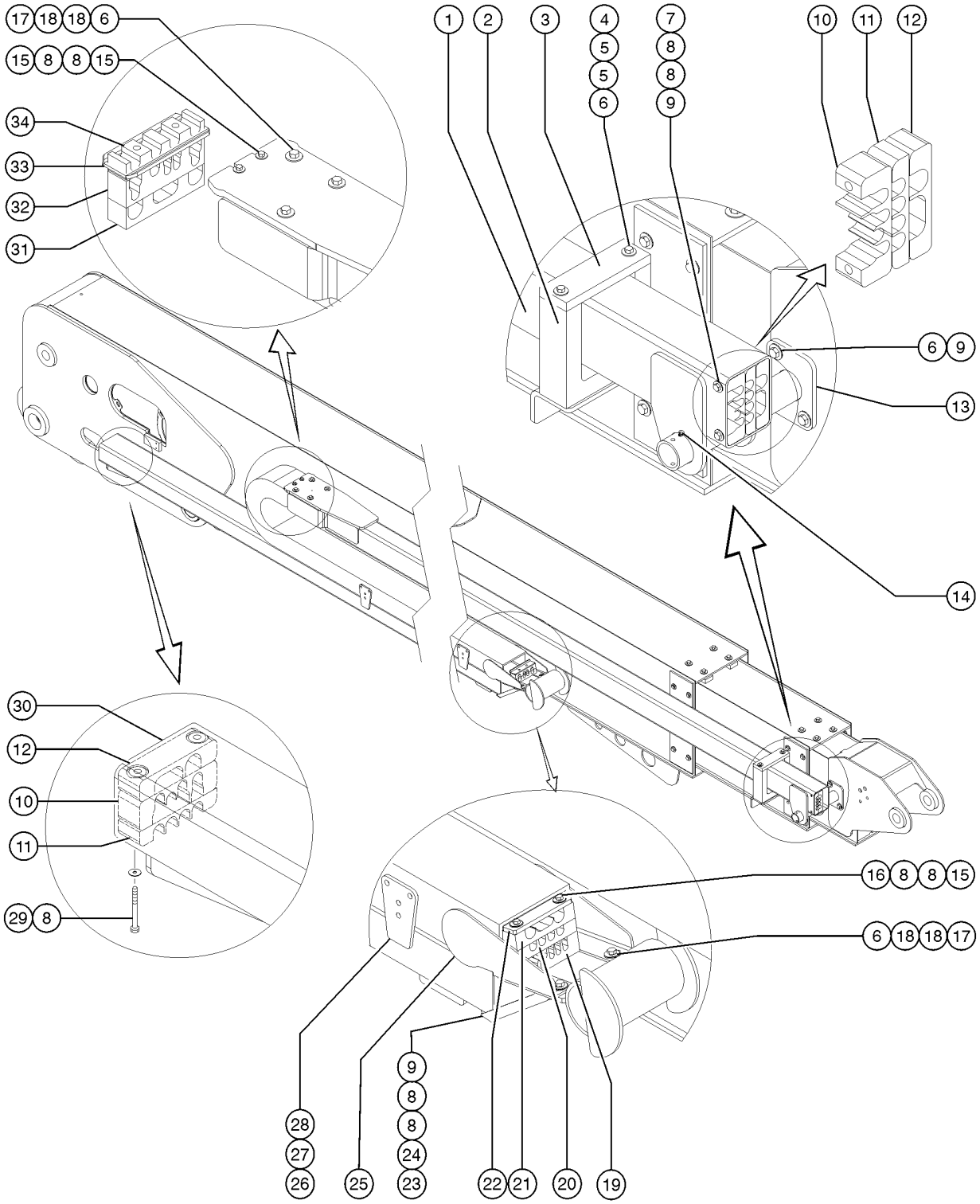

611.2 Cable Track (from SN 22586)

Item	Part No.	Description	Qty.
25-	121035GT	PIN,1.250 X 9.25, 2 RINGS for T114223	
25-	122662GT	END BRACKET,MOVING END for T114223	
25-	122663GT	END BRACKET,FIXED END for T114223	
25-	122668GT	GUIDE FINGER,PLASTIC for T114223	
25-	218448GT	FINGER,GUIDE,CABLE TRACK for T114223	
25-	229169GT	FLATBAR, CLAMPS, CABLE TRACK for T114223	
25-	122661GT	REPAIR KIT,4 LINK,W/GUIDE for T114223	
26	218448GT	FINGER,GUIDE,CABLE TRACK	12
26-	58310GT	SCREW,10-24 X.5 TORX PAN HD*** for 70264	
27	39317GT	STOP PLATFORM ROLLER	
28	87085GT	RIVET,ALUM,P,.188 X .25	
29	12343GT	SCREW,HHC,1/4-20 X 3	
30	88858GT	WELDMENT,CABLE TRACK TRAY***	1
31	228969GT	CLAMP, OPTION, CABLE TRACK (weld cable option)	1
32	824549GT	CLAMP, CABLES	1
33	121065GT	FORMING,CLAMP,TOP,CABLE TRACK	1
34	228967GT	CLAMP, CABLE	1

701.1 Platform Installation, S-60

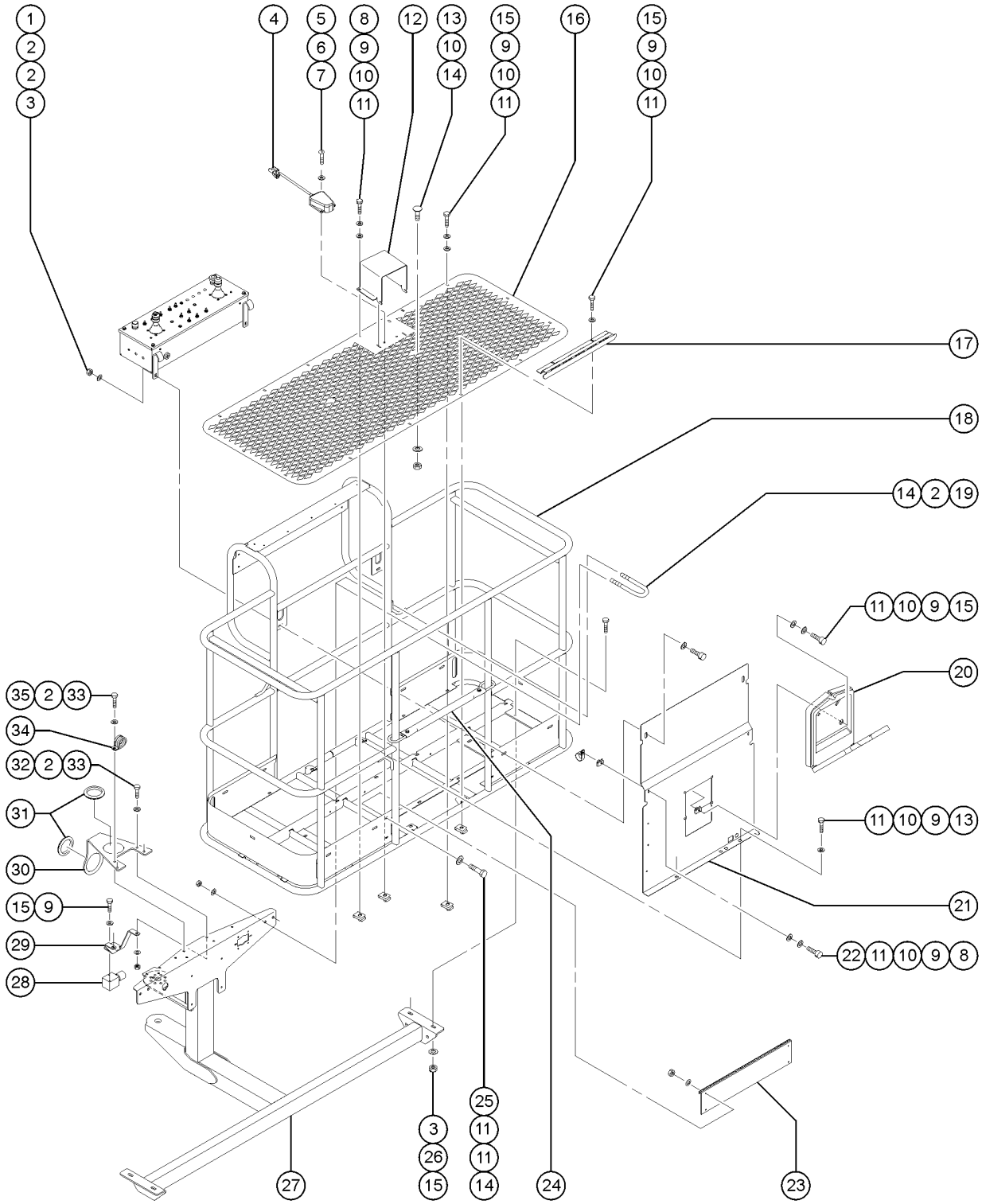

Item	Part No.	Description	Qty.
1	7713GT	NUT, LP NYLOCK, 3/8-16	
2	5397GT	WASHER, FLAT, USS, 5/16-18	
3	6019GT	SCREW,HHC,3/8-16 X 1.25 GRD 5	
4A	73233GT	ASSEMBLY,FOOT SWITCH*** (to SN 22415)	1
4A-	13482GT	FOOT SWITCH*** for PN 73233	
4A-	43960GT	WIRE CABLE,16/4 CON.TPE JKT for PN 73233	66 inches
4A-	119058GT	CONN, PLUG, 4 WAY, DEUTSCH, DT, ENDCAP for PN 73233	
4A-	73739GT	BOOT,PLUG 4 WAY for PN 73233	
4A-	20262GT	MICROSWITCH,13482 FOOTSWITCH for PN 73233	
4B-	1254874GT	ASSEMBLY, FOOTSWITCH, S60 for PN 1257422	
4C	1254874GT	ASSEMBLY, FOOTSWITCH, S60 (from SN 22416)	1
5	73587GT	SCREW,PHIL,10-24 X .75	
6	6607GT	WASHER,LOCK,#10 PLTD	
7	73575GT	SPRING CLIP,10-24,.025-.125X.468,ZAG	
8	6888GT	SCREW, HHC, 1/4-20 X 1	
9	6356GT	WASHER, LOCK, .25	
10	6638GT	WASHER, FLAT, USS, 1/4"Y	
11	56912GT	SPRING CLIP,1/4-20,.025-.15X.54,ZAG	
12	147121GT	COVER, FOOT SWITCH, LARGE decals not included, refer to section 100	1
13	54274GT	SCREW,STEP BOLT,1/4-20 X .75	
14	4828GT	NUT, NYLOCK, 3/8-16	
15	6090GT	SCREW, HHC, 1/4-20 X .75	
16A	60160PGT	FLOORING,4 FT PLATFORM,PAINTED	1
16B	54247-SGT	PLAT. FLOOR, 5FT, PAINTED	1
16C	73477PGT	FLOORING, 6'FT PLATFORM	1
16D	73478PGT	FLOORING, 8 FT PLATFORM***	1
17	73610PGT	STEP PLATFORM ENTRY PAINTED***	1

701.1 Platform Installation, S-60

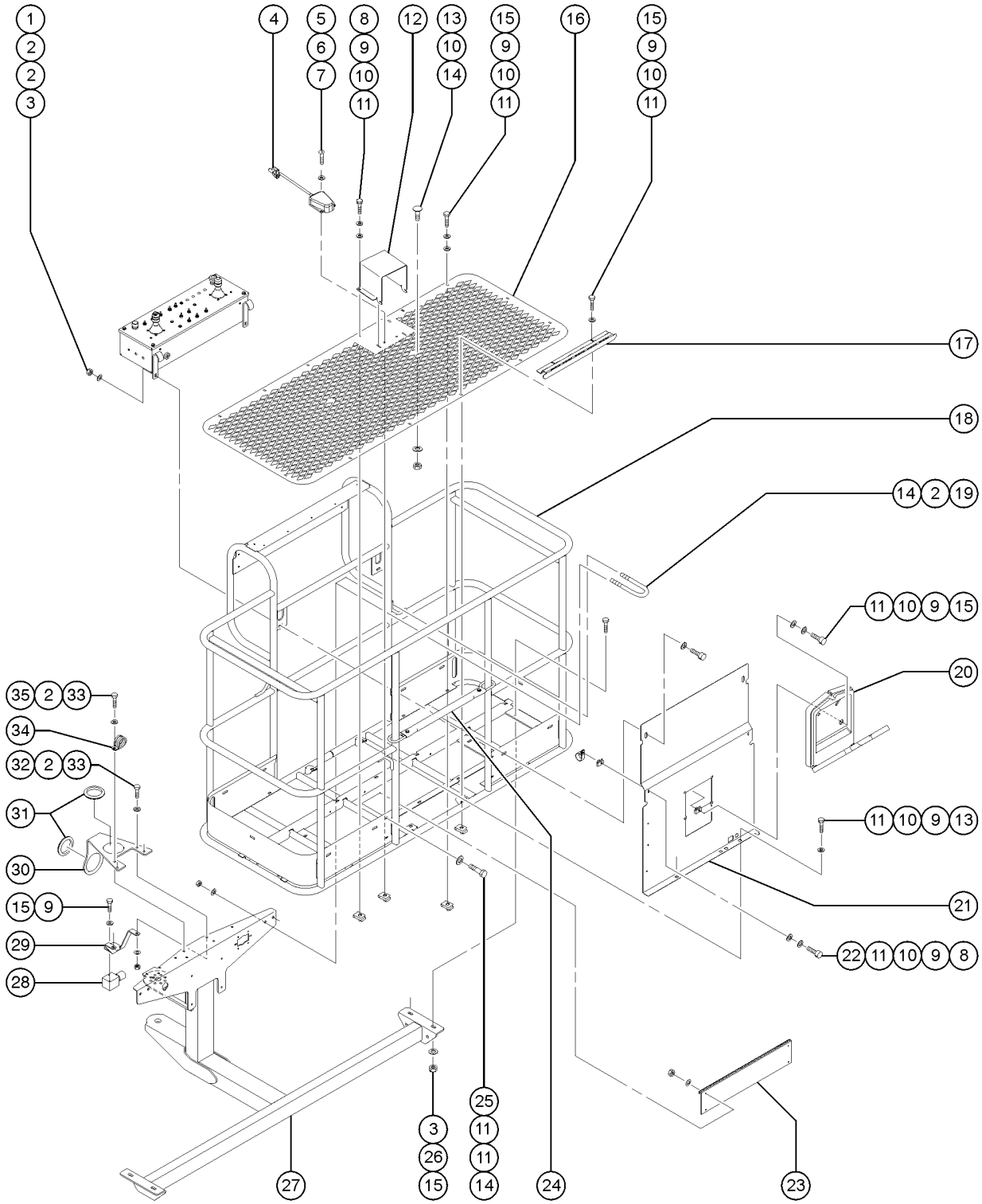

Item	Part No.	Description	Qty.
18A	161541GT	ASSY,4FT PLATFORM, NO DECALS decals not included, refer to section 100	1
18B	161542GT	ASSY,5FT PLATFORM, NO DECALS decals not included, refer to section 100	1
18C	160809GT	ASSY,6FT PLATFORM,NO DECALS decals not included, refer to section 100	1
18D	160804GT	ASSY,8FT PLATFORM,NO DECALS decals not included, refer to section 100	1
19	122755GT	UBOLT,FLATTENED,1.5DIAX3/8 UNC	
20A	44743GT	MANUAL BOX W/DECALS*** USA/Canada/Australia	1
20B	24514GT	BOX, INSTRUCTION STORAGE** Europe/Asia/South America (decal required; refer to Section100)	
21A	73574-SGT	DECAL PLATE ASSEMBLY decals not included, refer to section 100	
22	56424GT	CLAMP,1.25X.5 RUBBER-CUSHION	
23	94745PGT	TOEBOARD,ENTRY EUROPEAN PNTD**	1
24	102992GT	SLIDING MIDRAIL KIT,PTD	1
25	6091GT	NUT,NYLOCK,1/4-20	
26	6097GT	WASHER, FLAT, USS, 3/8", Y	
27		Ref: Platform Support refer to section 600 for platform support part information	
28		Ref: Jib Manifold refer to section 404.1	
29	110671GT	PLATE,JIB,ROTATE MANIFOLD	1
30	106163GT	FORMING,CABLE GUIDE order 55067 grommet separately	1
31	55067GT	GROMMET,RUBBER 3 X .19 X 3.5	2
32	13002GT	SCREW,HHC,5/16-18 X 1 GR5	
33	6782GT	NUT, NYLOCK, 5/16-18	
34	77180GT	CLAMP,1.31,#21 X 3/8,RUB CUSH	1
35	13000GT	SCREW,HHC,5/16-18 X 1.25	

701.2 Platform Installation, S-65

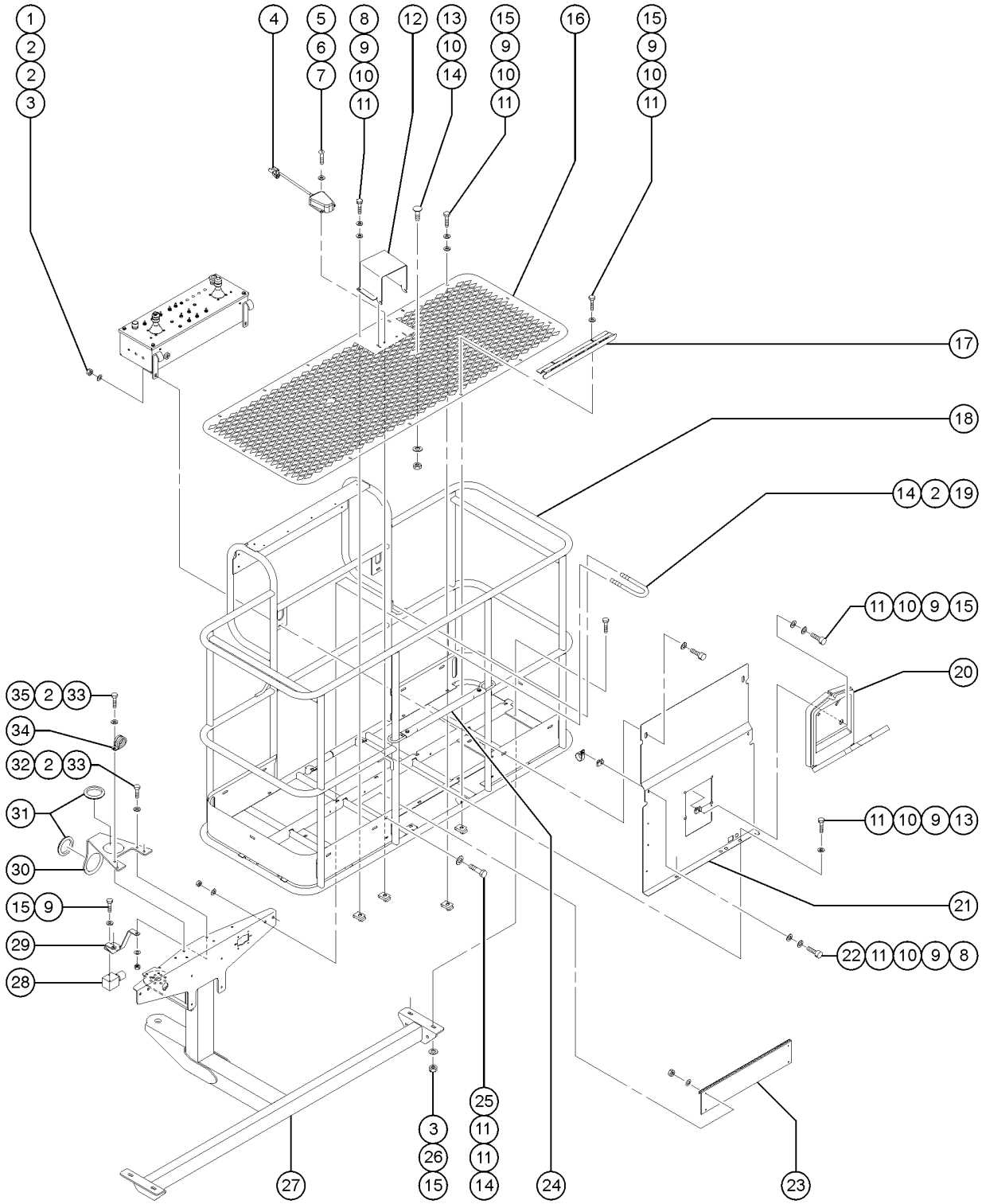

Item	Part No.	Description	Qty.
1	7713GT	NUT, LP NYLOCK, 3/8-16	
2	5397GT	WASHER, FLAT, USS, 5/16-18	
3	6019GT	SCREW,HHC,3/8-16 X 1.25 GRD 5	
4A	73233GT	ASSEMBLY,FOOT SWITCH*** (to SN 22415)	1
4A-	13482GT	FOOT SWITCH*** for PN 73233	
4A-	43960GT	WIRE CABLE,16/4 CON.TPE JKT for PN 73233	66 inches
4A-	119058GT	CONN, PLUG, 4 WAY, DEUTSCH, DT, ENDCAP for PN 73233	
4A-	73739GT	BOOT,PLUG 4 WAY for PN 73233	
4A-	20262GT	MICROSWITCH,13482 FOOTSWITCH for PN 73233	
4B	1257422GT	KIT, FOOTSWITCH, S60 upgrade kit	1
4B-	1254874GT	ASSEMBLY, FOOTSWITCH, S60 for PN 1257422	
5	73587GT	SCREW,PHIL,10-24 X .75	
6	6607GT	WASHER,LOCK,#10 PLTD	
7	73575GT	SPRING CLIP,10-24,.025-.125X.468,ZAG	
8	6888GT	SCREW, HHC, 1/4-20 X 1	
9	6356GT	WASHER, LOCK, .25	
10	6638GT	WASHER, FLAT, USS, 1/4"Y	
11	56912GT	SPRING CLIP,1/4-20,.025-.15X.54,ZAG	
12	147121GT	COVER, FOOT SWITCH, LARGE decals not included, refer to section 100	1
13	54274GT	SCREW,STEP BOLT,1/4-20 X .75	
14	4828GT	NUT, NYLOCK, 3/8-16	
15	6090GT	SCREW, HHC, 1/4-20 X .75	
16A	60160PGT	FLOORING,4 FT PLATFORM,PAINTED	1
16B	54247-SGT	PLAT. FLOOR, 5FT, PAINTED	1
16C	73477PGT	FLOORING, 6'FT PLATFORM	1
16D	73478PGT	FLOORING, 8 FT PLATFORM***	1
17	73610PGT	STEP PLATFORM ENTRY PAINTED***	1

701.2 Platform Installation, S-65

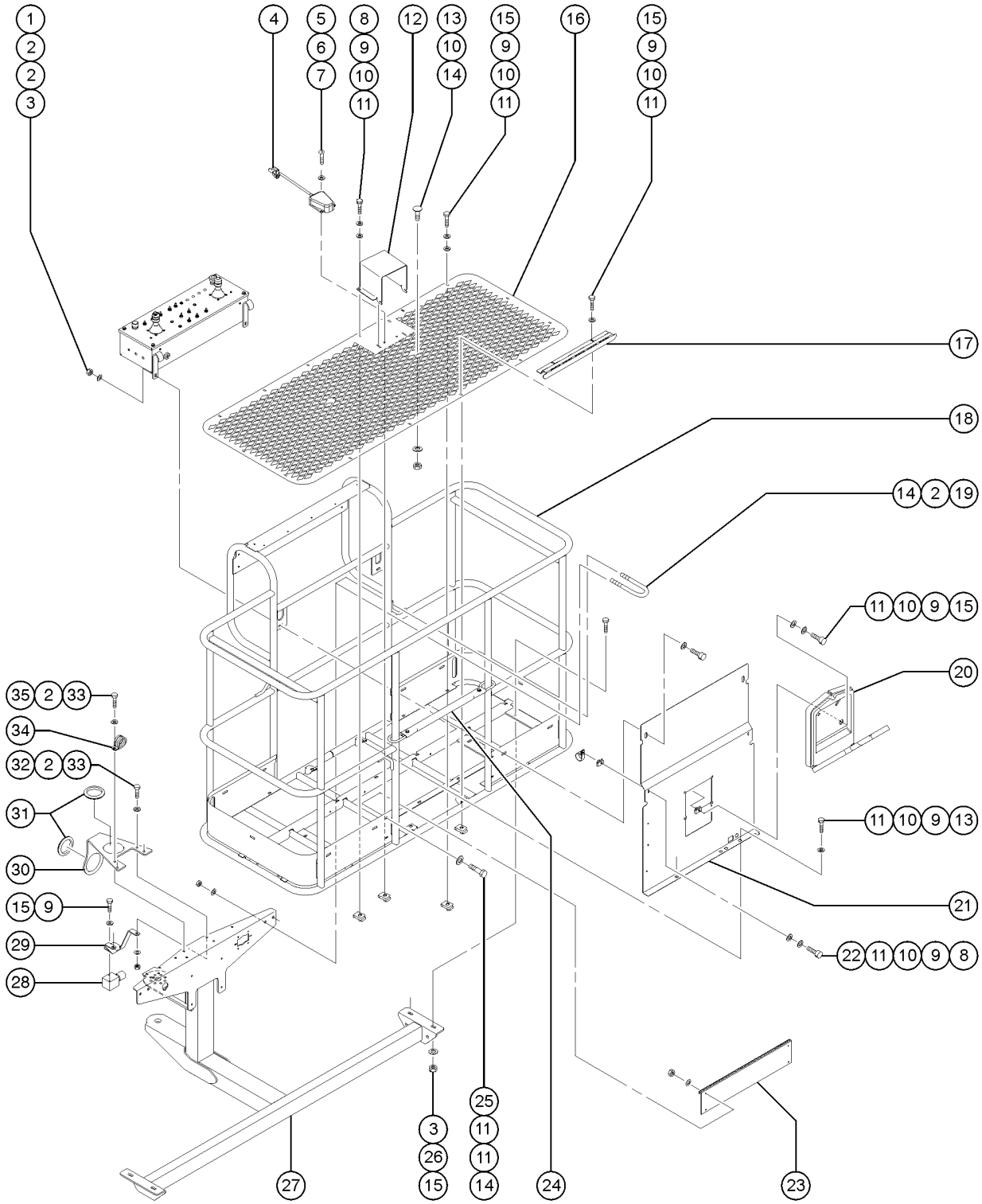

Item	Part No.	Description	Qty.
18A	161541GT	ASSY,4FT PLATFORM, NO DECALS decals not included, refer to section 100	1
18B	161542GT	ASSY,5FT PLATFORM, NO DECALS decals not included, refer to section 100	1
18C	160809GT	ASSY,6FT PLATFORM,NO DECALS decals not included, refer to section 100	1
18D	160804GT	ASSY,8FT PLATFORM,NO DECALS decals not included, refer to section 100	1
19	122755GT	UBOLT,FLATTENED,1.5DIAX3/8 UNC	
20A	44743GT	MANUAL BOX W/DECALS*** USA/Canada/Australia	1
20B	24514GT	BOX, INSTRUCTION STORAGE** Europe/Asia/South America (decal required; refer to Section100)	
21A	73574-SGT	DECAL PLATE ASSEMBLY decals not included, refer to section 100	
22	56424GT	CLAMP,1.25X.5 RUBBER-CUSHION	
23	94745PGT	TOEBOARD,ENTRY EUROPEAN PNTD**	1
24	102992GT	SLIDING MIDRAIL KIT,PTD	1
25	6091GT	NUT,NYLOCK,1/4-20	
26	6097GT	WASHER, FLAT, USS, 3/8", Y	
27		Ref: Platform Support refer to section 600 for platform support part information	
28		Ref: Jib Manifold refer to section 404.1	
29	110671GT	PLATE,JIB,ROTATE MANIFOLD	1
30	106163GT	FORMING,CABLE GUIDE	1
31	55067GT	GROMMET,RUBBER 3 X .19 X 3.5	2
32	13002GT	SCREW,HHC,5/16-18 X 1 GR5	
33	6782GT	NUT, NYLOCK, 5/16-18	
34	77180GT	CLAMP,1.31,#21 X 3/8,RUB CUSH	1
35	13000GT	SCREW,HHC,5/16-18 X 1.25	

702.1 Platform Control Box - View 1

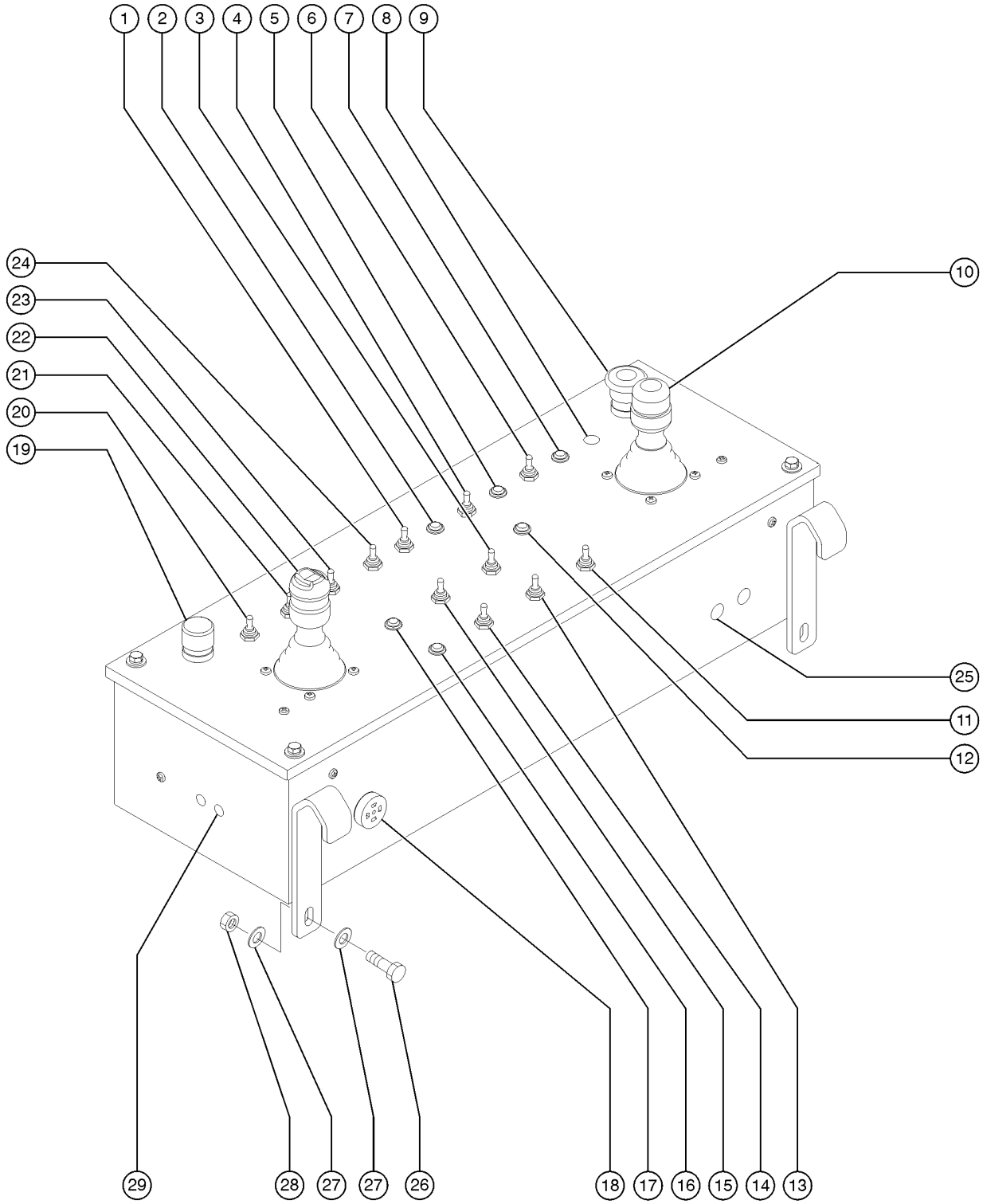

702.1 Platform Control Box - View 1

Item	Part No.	Description	Qty.
A-	128578GT	SCREW T-SWITCH PH/PH 6-32X1/4 (included in each toggle switch assembly)	
B-	27246GT	BOOT,TOGGLE SWITCH,SHORT* (included in each toggle switch assembly)	
1	128201GT	SWITCH TOGGLE ASSY DPDT 2P MOM (Auxiliary Power; includes boot and hardware)	1
1-	128581-SGT	SWITCH TOGGLE DPDT 2P MOM SHDR	
2A	824879GT	LIGHT,LED IND. RED 12V NH (Machine not level indicator) (option)	1
2B	229567GT	PLUG,SANTOPRENE .5 BLACK DOME (without option)	1
3A	128200GT	SWITCH TOGGLE ASSY SPDT 3P MOM (Glow Plug; diesel models; includes boot and hardware)	1
3A-	128580GT	SWITCH TOGGLE SPDT 3P MOM SHDR	
3B	229567GT	PLUG,SANTOPRENE .5 BLACK DOME (Gas/LPG models)	1
4A	128204GT	SWITCH TOGGLE ASSY SPDT 2P MNT (Generator) (option)	1
4A-	128584-SGT	SWITCH TOGGLE SPDT 2P MNT SHDR	
4B	229567GT	PLUG,SANTOPRENE .5 BLACK DOME (without option)	1
5A	824880GT	LIGHT,LED IND. AMBER 12V NH (upper capacity range) (S-60X, S-60TX, S-60XC)	1
5A-	56848GT	WASHER,LOCK,IND,LAMP RETAINER	
5B	229567GT	PLUG,SANTOPRENE .5 BLACK DOME (S-60, S-65)	
6A	128200GT	SWITCH TOGGLE ASSY SPDT 3P MOM (Capacity range select) (S-60X, S-60TX, S-60XC, S-60HC)	1
6A-	128580GT	SWITCH TOGGLE SPDT 3P MOM SHDR	
6B	229567GT	PLUG,SANTOPRENE .5 BLACK DOME (S-60, S-65)	1
7A	824880GT	LIGHT,LED IND. AMBER 12V NH (lower capacity range) (S-60X, S-60TX, S-60XC, S-60HC)	1
7A-	56848GT	WASHER,LOCK,IND,LAMP RETAINER	
7B	229567GT	PLUG,SANTOPRENE .5 BLACK DOME (S-60, S-65)	1
8	229567GT	PLUG,SANTOPRENE .5 BLACK DOME (used for optional equipment)	1
9	66812GT	BUTTON,PUSH,RED MUSHROOM HEAD	1
9-	146478GT	BOOT(BELLOWS),E-STOP,BLACK (from SN 21191)	
9-	66818GT	CONTACT,NC	
9-	94506GT	BASE,W/3 NC CONTACTS	
10		Ref. JOYSTICK refer to section 704.1	1
10	139338GT	SCREW PH M5-0.8X20 DIN 7500CE	4

702.1 Platform Control Box - View 1

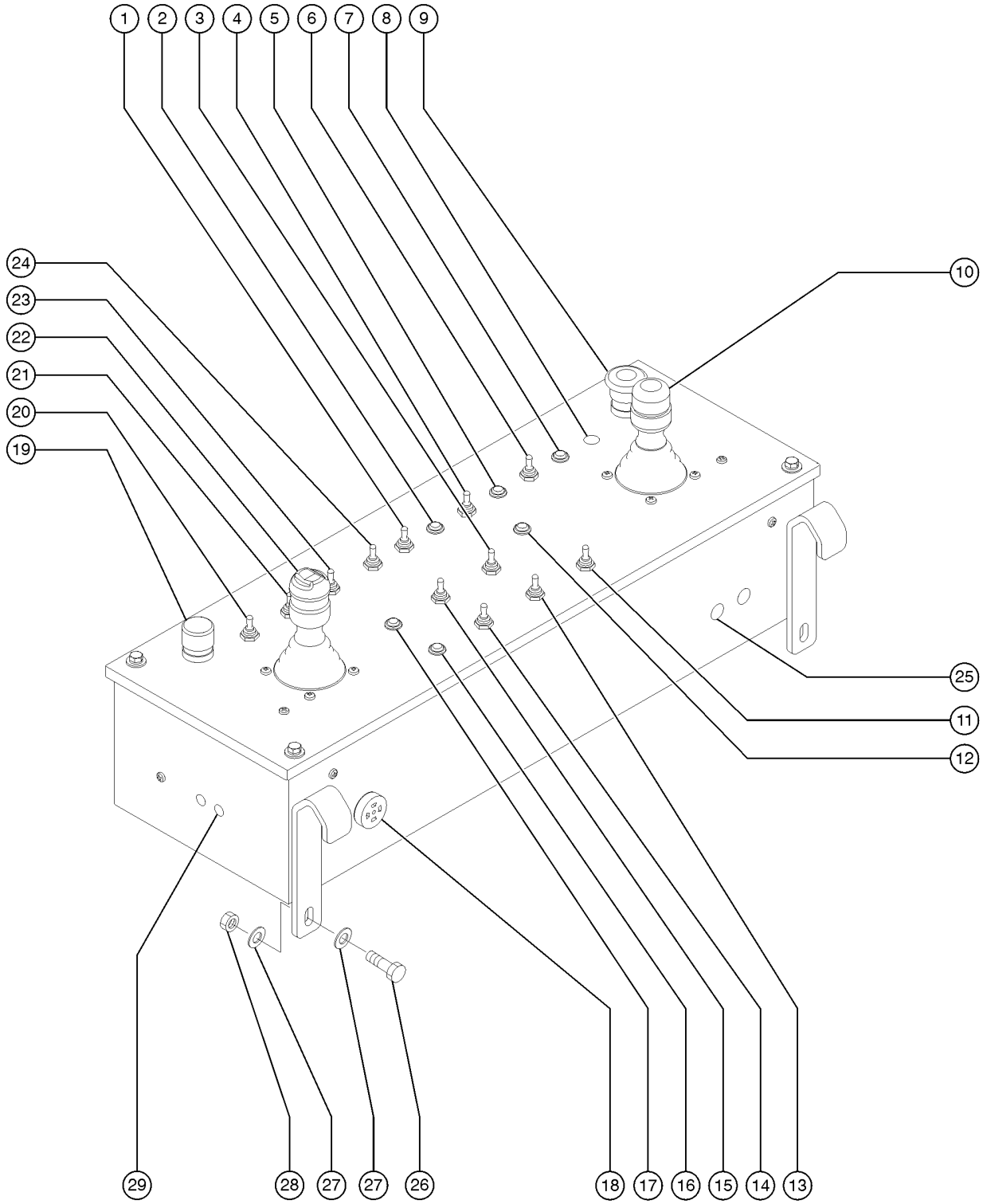

702.1 Platform Control Box - View 1

Item	Part No.	Description	Qty.
11	128200GT	SWITCH TOGGLE ASSY SPDT 3P MOM (Drive enable; includes boot and hardware)	1
11-	128580GT	SWITCH TOGGLE SPDT 3P MOM SHDR	
12	824879GT	LIGHT,LED IND. RED 12V NH (Drive enable indicator light)	1
12-	56848GT	WASHER,LOCK,IND,LAMP RETAINER	
13	128204GT	SWITCH TOGGLE ASSY SPDT 2P MNT (Engine idle select; includes boot and hardware)	1
13-	128584-SGT	SWITCH TOGGLE SPDT 2P MNT SHDR	
14A	128204GT	SWITCH TOGGLE ASSY SPDT 2P MNT (Fuel select; includes boot and hardware)	1
14A-	128584-SGT	SWITCH TOGGLE SPDT 2P MNT SHDR	
14B	45384GT	PLUG,NYLON .50 BLACK DOMED (Diesel models)	
15	128200GT	SWITCH TOGGLE ASSY SPDT 3P MOM (Engine start; includes boot and hardware)	1
15-	128580GT	SWITCH TOGGLE SPDT 3P MOM SHDR	
16A	824879GT	LIGHT,LED IND. RED 12V NH (Platform overload indicator)	1
16A-	56848GT	WASHER,LOCK,IND,LAMP RETAINER	
16B	45384GT	PLUG,NYLON .50 BLACK DOMED (models without platform overload)	
17	824879GT	LIGHT,LED IND. RED 12V NH (Machine malfunction indicator)	1
17-	56848GT	WASHER,LOCK,IND,LAMP RETAINER	
18	45383GT	ALARM,WARBLE TONE 5-30 VDC*** (retaining nut 72326 sold separately)	1
18-	72326GT	NUT - PLASTIC, RING FOR ALARMS	
19	66813GT	BUTTON,PUSH,BLACK W/SEAL***	1
19-	66815GT	BASE, W/1 N.O. CONTACTS***	
19-	66816GT	CONTACT,N.O.***	
20	128200GT	SWITCH TOGGLE ASSY SPDT 3P MOM (Platform level; includes boot and hardware)	1
20-	128580GT	SWITCH TOGGLE SPDT 3P MOM SHDR	
21	128202GT	SWITCH TOGGLE ASSY DPDT 3P MOM (Platform rotate; includes boot and hardware)	1
21-	128582-SGT	SWITCH TOGGLE DPDT 3P MOM SHDR	
22		Ref. JOYSTICK refer to section 704.1	1
22	139338GT	SCREW PH M5-0.8X20 DIN 7500CE	4
23A	128200GT	SWITCH TOGGLE ASSY SPDT 3P MOM (Jib boom up/down; includes boot and hardware)	1

702.1 Platform Control Box - View 1

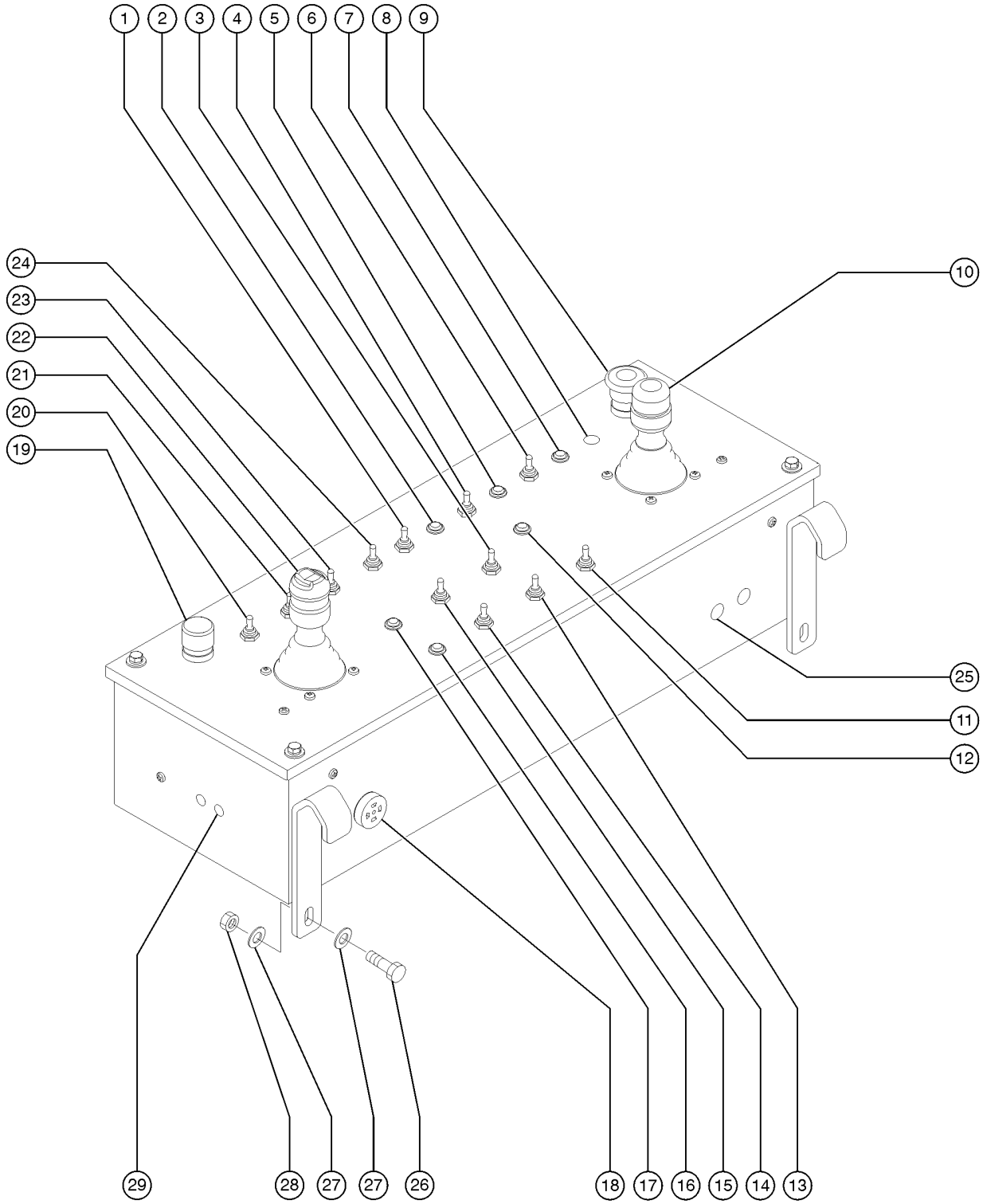

702.1 Platform Control Box - View 1

Item	Part No.	Description	Qty.
23A-	128580GT	SWITCH TOGGLE SPDT 3P MOM SHDR	
23B	824880GT	LIGHT,LED IND. AMBER 12V NH	1
23B-	56848GT	WASHER,LOCK,IND,LAMP RETAINER	
24	128204GT	SWITCH TOGGLE ASSY SPDT 2P MNT (Drive speed; includes boot and hardware)	1
24-	128584-SGT	SWITCH TOGGLE SPDT 2P MNT SHDR	
25	42288GT	PLUG,NYLON .188 BLACK DOMED	2
26	8516GT	SCREW, HCC, 3/8-16 X 1.50	2
27	5397GT	WASHER, FLAT, USS, 5/16-18	4
28	4828GT	NUT, NYLOCK, 3/8-16	2
29	45384GT	PLUG,NYLON .50 BLACK DOMED	2

703.1 Platform Control Box - View 2, S-60

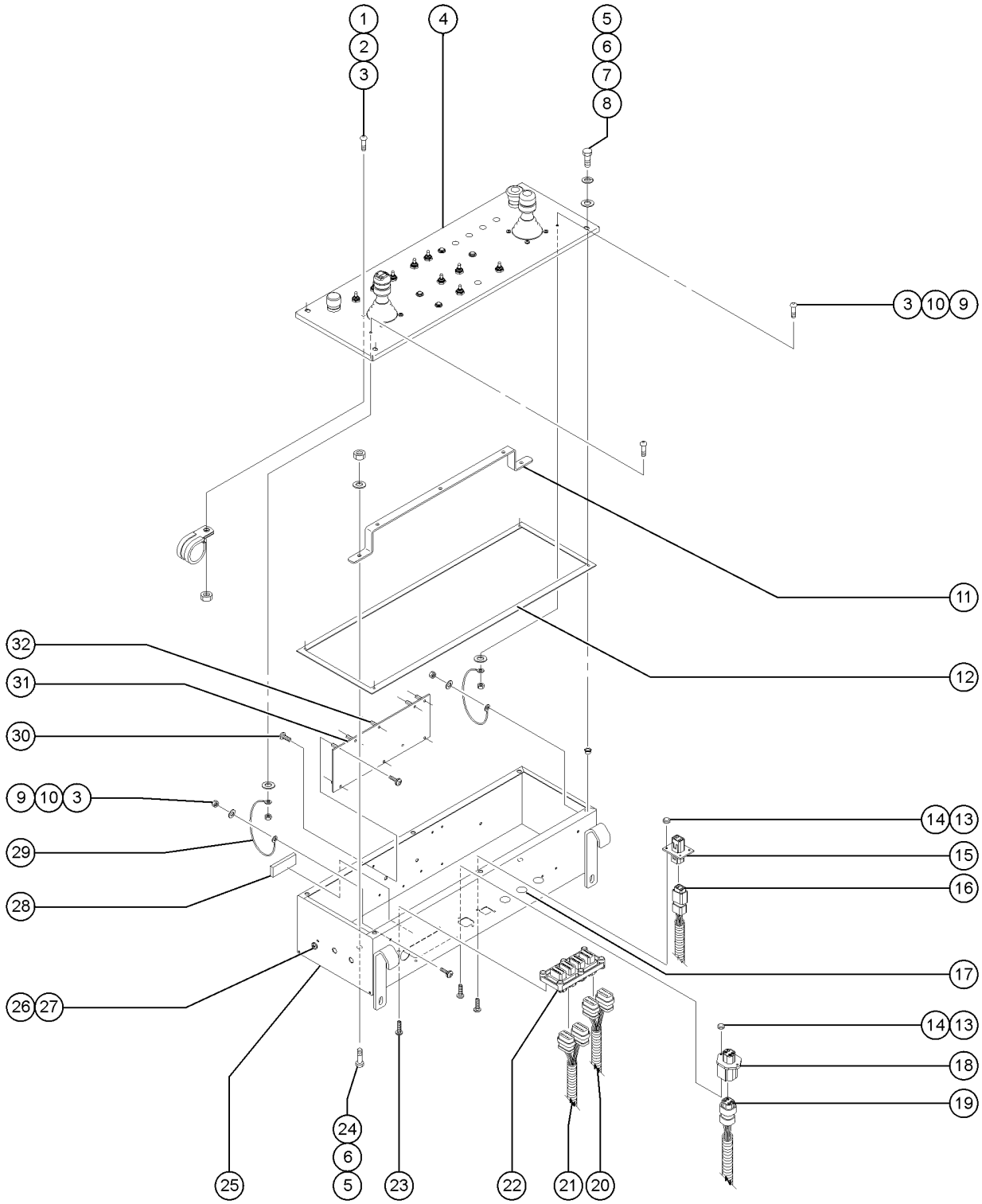

703.1 Platform Control Box - View 2, S-60

Item	Part No.	Description	Qty.
	111413GT	JOYSTICK CONNECTOR ASSEM,DEUT	
	111420GT	OPTION,ROCKER STEER	
		Ref. PLATFORM BOX HARNESS (refer to section 307.1)	
	121847GT	RELAY,TIME DELAY,2 SEC,30A models with load sense	
1	139338GT	SCREW PH M5-0.8X20 DIN 7500CE	8
2	18666GT	CLAMP,1.00,#16 X 1/4,RUB CUSH	1
3	104030GT	NUT HEX M5-0.8 CLASS 8 ZINC	
4	T109341GT	PLAT BOX LID W/WRD DEC,S60/65 S-60/65 and S-65TX (Australia models), S-65/65TX (N. America and Canada models)	1
4-	T109342GT	PLAT BOX LID W/WRD DEC,S60TX S-60TX (N. America, Canada and Australia models)	
4-	T109343GT	PLAT BOX LID W/WRD DEC,S60HC S-60HC (Europe models)	
4-	T109344GT	PLAT BOX LID W/WRD DEC,S60X S-60X (N. America and Canada models)	
4-	T109345GT	PLAT BOX LID W/WRD DEC,S60XC S-60XC (N. America and Canada models)	
4-	T109346GT	PLAT BOX LID W/SYM DEC,S60/65 S-60/65 and S-65TX (Europe models), S-65/65TX (S. America and Asia models)	
4-	T109347GT	PLAT BOX LID W/SYM DEC,S60TX S-60TX (S. America and Asia models)	
4-	T109348GT	PLAT BOX LID W/SYM DEC,S60X S-60X (S. America and Asia models)	
4-	T109349GT	PLAT BOX LID W/SYM DEC,S60XC S-60XC (S. America and Asia models)	
5	6090GT	SCREW, HHC, 1/4-20 X .75	
6	6356GT	WASHER, LOCK, .25	
7	6638GT	WASHER, FLAT, USS, 1/4"Y	
8	23404GT	NUTSERT,1/4-20,STEEL CAD PLTD	4
9	49819GT	SCREW,PHILLIPS,PHM,10-32 X .5	
10	6146GT	WASHER,FLAT,MS,#10,Y	
11	119644GT	BRACKET,PBOX WIRE SUPPORT	1
12	81488GT	GASKET,PLATFORM CONTROL BOX	1
13	49820GT	SCREW,PHILLIPS,PHM,6-32 X .5	
14	12344GT	NUT,NYLOCK,6-32	
15	73723GT	CONN RECEPT,FLANGED	1
16		Ref. FOOT SWITCH WIRE HARNESS ASSEMBLY (refer to section 307.1)	

703.1 Platform Control Box - View 2, S-60

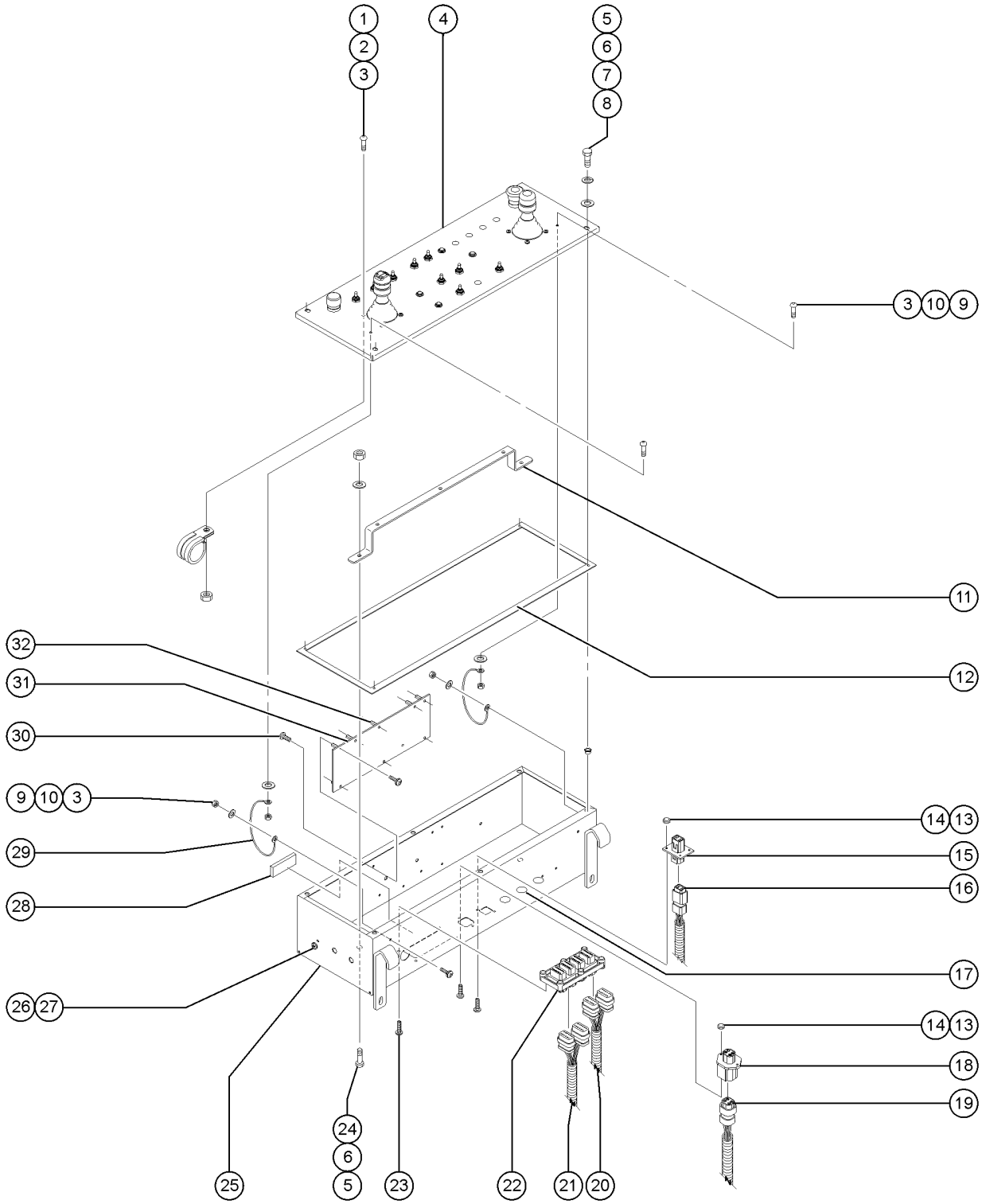

703.1 Platform Control Box - View 2, S-60

Item	Part No.	Description	Qty.
17	15243GT	PLUG,NYLON .875 BLACK DOMED	3
18	73717GT	CONN, RECEP, 4 WAY, DEUTSCH, DTP, FLANGE	1
19		Ref. HARNESS,12V TO PLAT (refer to section 307.1)	
20		Ref. HARNESS,18/22 BOOM 2 (refer to section 307.1)	
21		Ref. HARNESS BOOM CABLE 1 (refer to section 307.1)	
22	73736GT	CONN,RECEP 48 WAY,4 X 12	1
23	73803GT	SCREW,SHM,PHP, #12 X .75	
24	6889GT	NUT,LP NYLOCK,1/4-20	
25	T109350GT	PLATFORM CONTROL BOX W/DECAL N. America, Canada and Australia models	
25-	81487PGT	PLATFORM CONTROL BOX,PAINTED Europe, S. America and Asia models	1
26	54365GT	SCREW,PHIL,PHM,10-32 X .5,SSTL	
27	6178GT	NUT, NYLOCK, 10-32	
28	30997GT	CORROSION INHIBITOR,FOAM	1
29	77351GT	LANYARD,PLATFORM CONTROL BOX	2
30	81551GT	SCREW,PHIL,PHM,6-32 X 1/4 SS	
31A	235411GT	ASSY,PCB ALC500 S60 LEG V202 for S-60 HC from SN 21288; Machine model and serial number required when ordering. Contact Genie Service Parts for assistance.	
31A	235323GT	ASSY,PCB,ALC500-2 S60 V204 for S-60 HC from SN 21001 to 21287; Machine model and serial number required when ordering. Contact Genie Service Parts for assistance.	
31B	235323GT	ASSY,PCB,ALC500-2 S60 V204 for all S-60/65 models except S-60HC from SN 21001; Machine model and serial number required when ordering. Contact Genie Service Parts for assistance.	
31C	119641GT	SWITCH,THERMOSTAT 85F OPEN	
31C	128204GT	SWITCH TOGGLE ASSY SPDT 2P MNT	
31C	119560GT	WIRING KIT,CONTROL BOX HEATER	
31C	27287GT	RESISTOR,10 OHM,25 WATT for 119560	2
31C	T115352GT	DECAL,OPTION CONTROL BOX HEATR	1
32	81550GT	STANDOFF,6-32 X 3/8L X 1/4 HEX	10

703.2 Platform Control Box - View 2, S-65

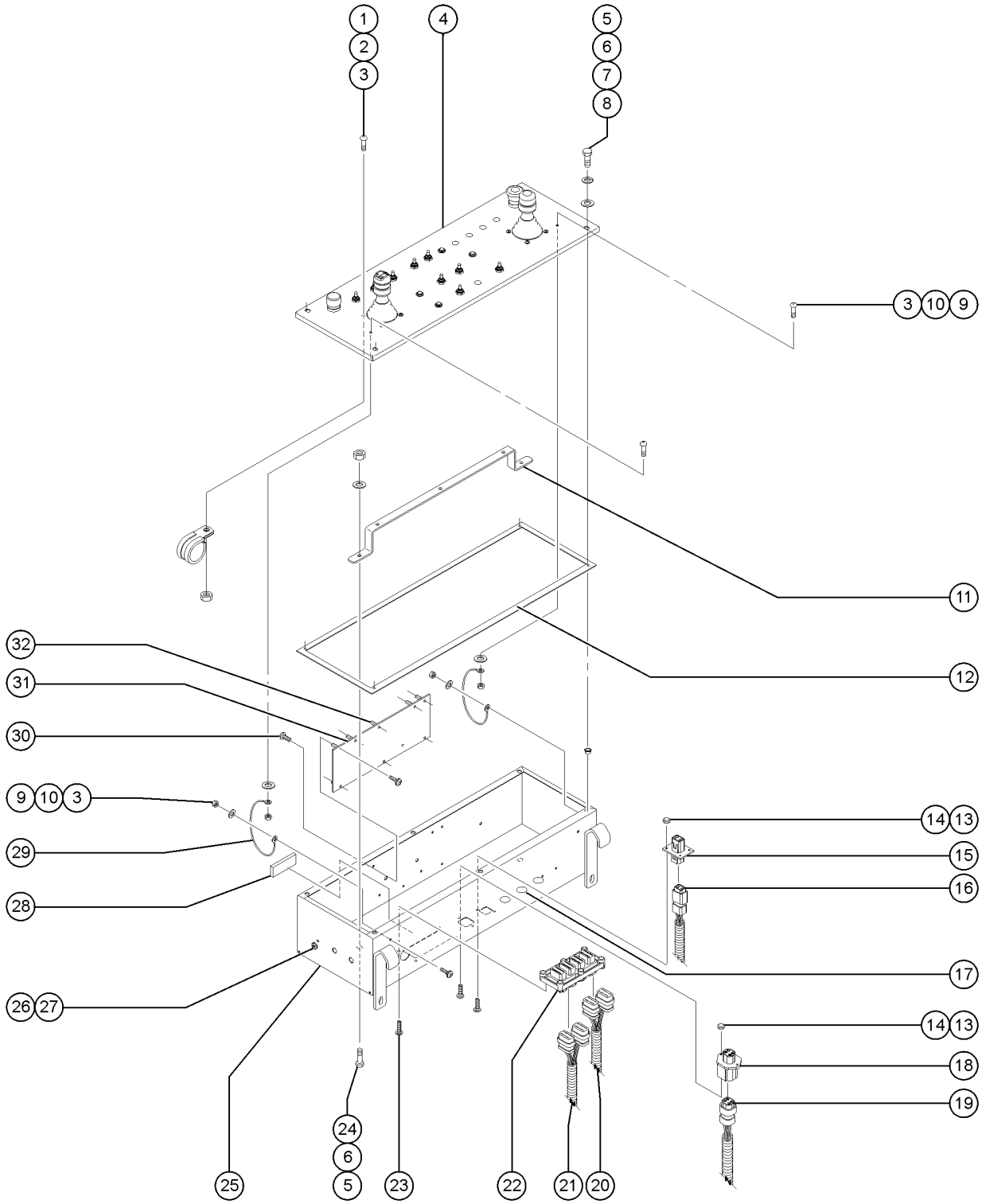

703.2 Platform Control Box - View 2, S-65

Item	Part No.	Description	Qty.
	111413GT	JOYSTICK CONNECTOR ASSEM,DEUT	
	111420GT	OPTION,ROCKER STEER	
		Ref. PLATFORM BOX HARNESS (refer to section 307.1)	
	121847GT	RELAY,TIME DELAY,2 SEC,30A models with load sense	
1	139338GT	SCREW PH M5-0.8X20 DIN 7500CE	8
2	18666GT	CLAMP,1.00,#16 X 1/4,RUB CUSH	1
3	104030GT	NUT HEX M5-0.8 CLASS 8 ZINC	
4	T109341GT	PLAT BOX LID W/WRD DEC,S60/65 S-60/65 and S-65TX (Australia models), S-65/65TX (N. America and Canada models)	1
4-	T109346GT	PLAT BOX LID W/SYM DEC,S60/65 S-60/65 and S-65TX (Europe models), S-65/65TX (S. America and Asia models)	
5	6090GT	SCREW, HHC, 1/4-20 X .75	
6	6356GT	WASHER, LOCK, .25	
7	6638GT	WASHER, FLAT, USS, 1/4"Y	
8	23404GT	NUTSERT,1/4-20,STEEL CAD PLTD	4
9	49819GT	SCREW,PHILLIPS,PHM,10-32 X .5	
10	6146GT	WASHER,FLAT,MS,#10,Y	
11	119644GT	BRACKET,PBOX WIRE SUPPORT	1
12	81488GT	GASKET,PLATFORM CONTROL BOX	1
13	49820GT	SCREW,PHILLIPS,PHM,6-32 X .5	
14	12344GT	NUT,NYLOCK,6-32	
15	73723GT	CONN RECEPT,FLANGED	1
16		Ref. FOOT SWITCH WIRE HARNESS ASSEMBLY (refer to section 307.1)	
17	15243GT	PLUG,NYLON .875 BLACK DOMED	3
18	73717GT	CONN, RECEP, 4 WAY, DEUTSCH, DTP, FLANGE	1
19		Ref. HARNESS,12V TO PLAT (refer to section 307.1)	
20		Ref. HARNESS,18/22 BOOM 2 (refer to section 307.1)	
21		Ref. HARNESS BOOM CABLE 1 (refer to section 307.1)	
22	73736GT	CONN,RECEP 48 WAY,4 X 12	1
23	73803GT	SCREW,SHM,PHP, #12 X .75	

703.2 Platform Control Box - View 2, S-65

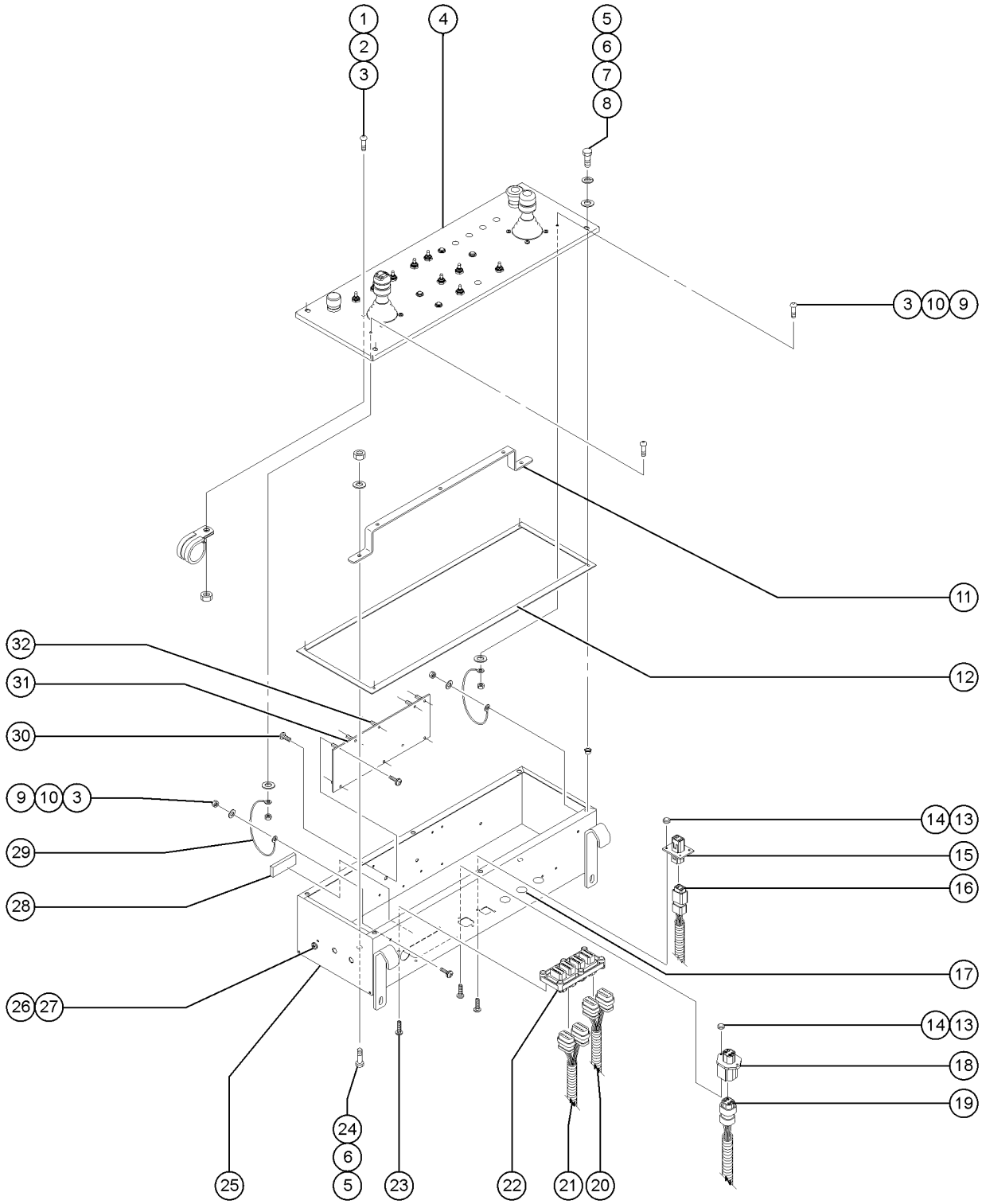

703.2 Platform Control Box - View 2, S-65

Item	Part No.	Description	Qty.
24	6889GT	NUT,LP NYLOCK,1/4-20	
25	T109350GT	PLATFORM CONTROL BOX W/DECAL N. America, Canada and Australia models	
25-	81487PGT	PLATFORM CONTROL BOX,PAINTED Europe, S. America and Asia models	1
26	54365GT	SCREW,PHIL,PHM,10-32 X .5,SSTL	
27	6178GT	NUT, NYLOCK, 10-32	
28	30997GT	CORROSION INHIBITOR,FOAM	1
29	77351GT	LANYARD,PLATFORM CONTROL BOX	2
30	81551GT	SCREW,PHIL,PHM,6-32 X 1/4 SS	
31B	235323GT	ASSY,PCB,ALC500-2 S60 V204 for all S-60/65 models except S-60HC from SN 21001; Machine model and serial number required when ordering. Contact Genie Service Parts for assistance.	1
31C	119641GT	SWITCH,THERMOSTAT 85F OPEN	
31C	128204GT	SWITCH TOGGLE ASSY SPDT 2P MNT	
31C	119560GT	WIRING KIT,CONTROL BOX HEATER	
31C	27287GT	RESISTOR,10 OHM,25 WATT for 119560	2
31C	T115352GT	DECAL,OPTION CONTROL BOX HEATR	1
32	81550GT	STANDOFF,6-32 X 3/8L X 1/4 HEX	10

704.1 Joysticks, S-60

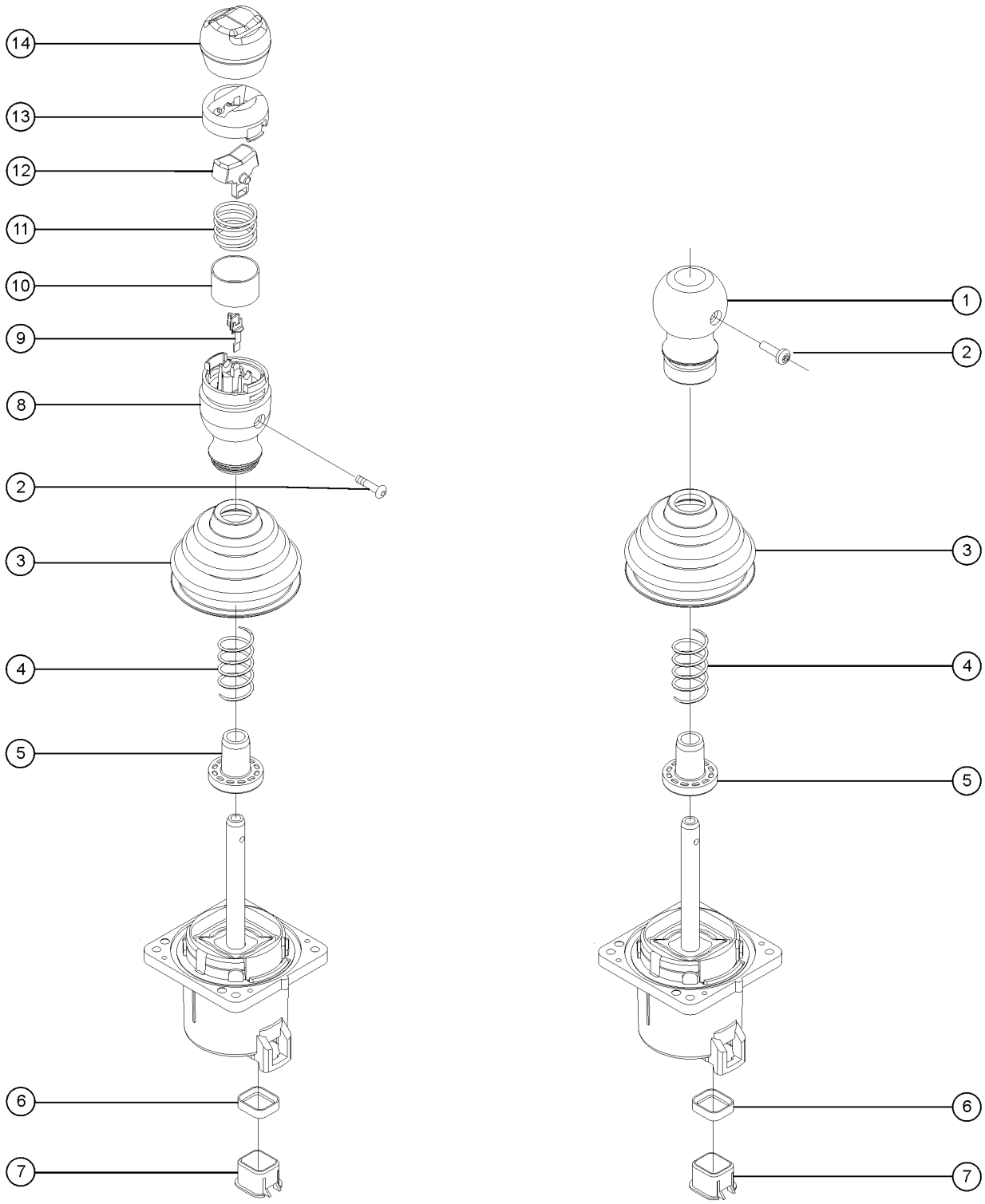

Item	Part No.	Description	Qty.
A-	101173GT	JOYSTICK,2 AXIS,ROCKER,DEUTSCH (calibration required after replacement), OEM joystick	
B-	101173HGT	JOYSTICK, DUAL AXIS W/STEER (calibration required after replacement), aftermarket joystick	
C-	101174GT	JOYSTICK,2 AXIS,DEUTSCH (calibration required after replacement), OEM joystick	
D-	101174HGT	JOYSTICK,DUAL AXIS W/KNOB (calibration required after replacement), aftermarket joystick	
E-	101005GT	JOYSTICK,1 AXIS ROCKER,DEUTSCH (calibration required after replacement), OEM joystick	
F-	101005HGT	JOYSTICK, SINGLE AXIS W/STEER (calibration required after replacement), aftermarket joystick	
G-	1269500GT	KIT, ISOLATION, 2 JOYSTICK	
H-	119613GT	HARN JOYSTICK ADAPTOR JS100 6-pin to 7-pin adapter (for 101174, 101175, 101005)	
1	62392GT	KNOB,JOYSTICK, 62390/62391	1
2	T112626GT	SCREW, PHM, #6-32 X .625 ZINC	1
3	139598GT	BOOT,JOYSTICK	1
4		SPRING,JOYSTK CENTR,62390/91	1
5	119915GT	COLLAR,JOYSTICK,CENTER	1
6	128000GT	SEAL, CONNECTOR (DT JOYSTICKS)	1
7	128001GT	SLEEVE,CONNECTOR,DT JOYSTICKS	1
8	75449GT	KNOB,ROCKER JOYSTICK 75565	1
9	75448GT	SUPPORT,SENSOR,JOYSTICK	1
10	75447GT	SWITCH SHIELD,ROCK JOYSTK75565	1
11	75446GT	SPRING,SWITCH CENTERING,75565	1
12	75445GT	ROCKER ASSY.,MAGNETIC 75565	1
13	75444GT	ROCKER,RETAINER, 75565	1
14	75443GT	BOOT, ROCKER JOYSTICK 75565	1

704.2 Joysticks, S-65

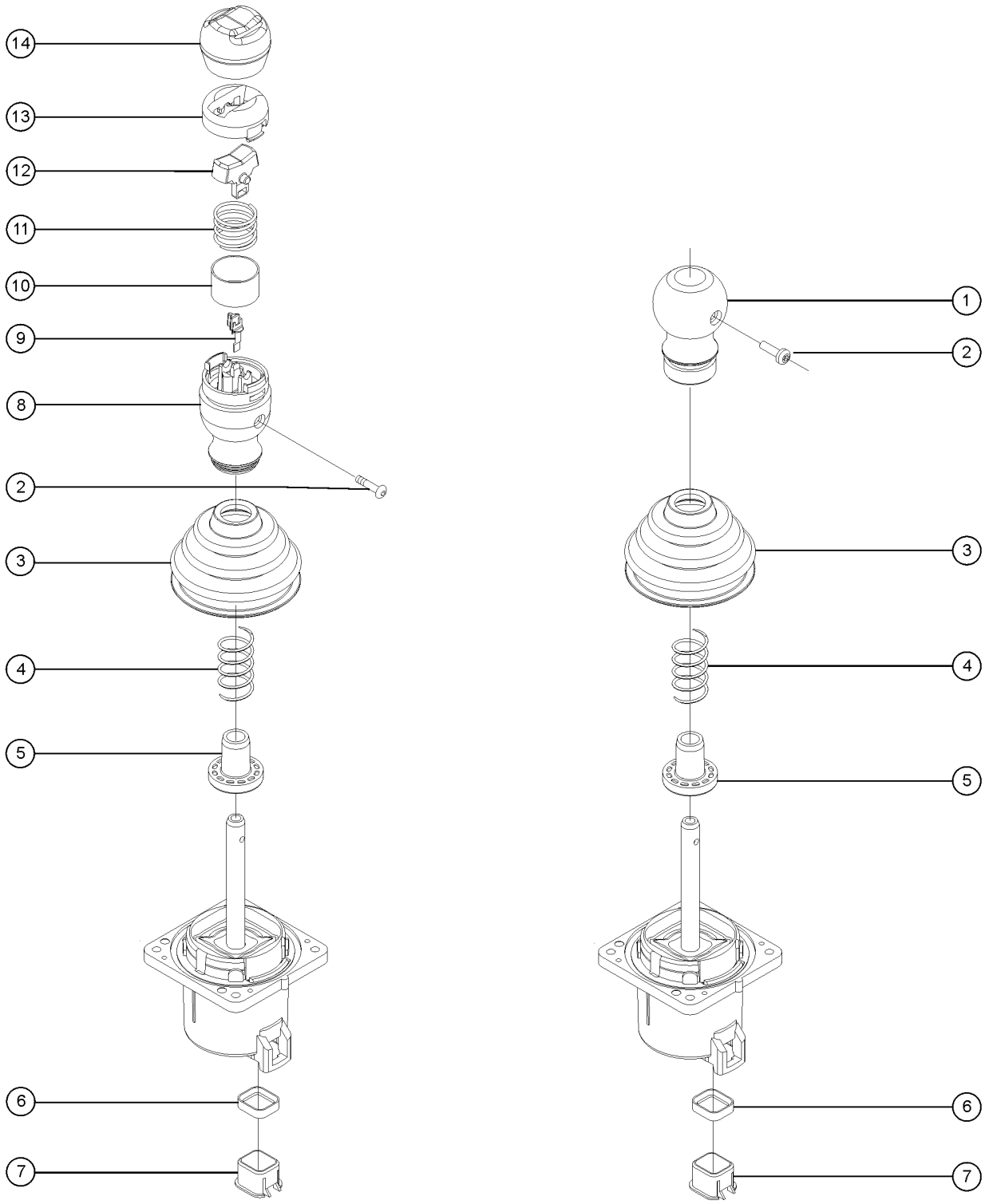

704.2 Joysticks, S-65

Item	Part No.	Description	Qty.
A-	101173GT	JOYSTICK,2 AXIS,ROCKER,DEUTSCH (calibration required after replacement), OEM joystick	
B-	101173HGT	JOYSTICK, DUAL AXIS W/STEER (calibration required after replacement), aftermarket joystick	
C-	101174GT	JOYSTICK,2 AXIS,DEUTSCH (calibration required after replacement), OEM joystick	
D-	101174HGT	JOYSTICK,DUAL AXIS W/KNOB (calibration required after replacement), aftermarket joystick	
E-	58253GT	KIT,REPAIR,DEUTSCH PLUG,W/TUBE small kit	
F-	83129GT	CONNECTOR KIT,DEUTSCH*** large kit	
G-	61794GT	CRIMPER,DEUTSCH,LIGHT DUTY*** tool	
Z	1269500GT	KIT, ISOLATION, 2 JOYSTICK	
1	62392GT	KNOB,JOYSTICK, 62390/62391	1
2	T112626GT	SCREW, PHM, #6-32 X .625 ZINC	1
3	139598GT	BOOT,JOYSTICK	1
4		SPRING,JOYSTK CENTR,62390/91 no longer available from supplier	1
5	119915GT	COLLAR,JOYSTICK,CENTER	1
6	128000GT	SEAL, CONNECTOR (DT JOYSTICKS)	1
7	128001GT	SLEEVE,CONNECTOR,DT JOYSTICKS	1
8	75449GT	KNOB,ROCKER JOYSTICK 75565	1
9	75448GT	SUPPORT,SENSOR,JOYSTICK	1
10	75447GT	SWITCH SHIELD,ROCK JOYSTK75565	1
11	75446GT	SPRING,SWITCH CENTERING,75565	1
12	75445GT	ROCKER ASSY.,MAGNETIC 75565	1
13	75444GT	ROCKER,RETAINER, 75565	1
14	75443GT	BOOT, ROCKER JOYSTICK 75565	1

801.1 Function Manifold - View 1

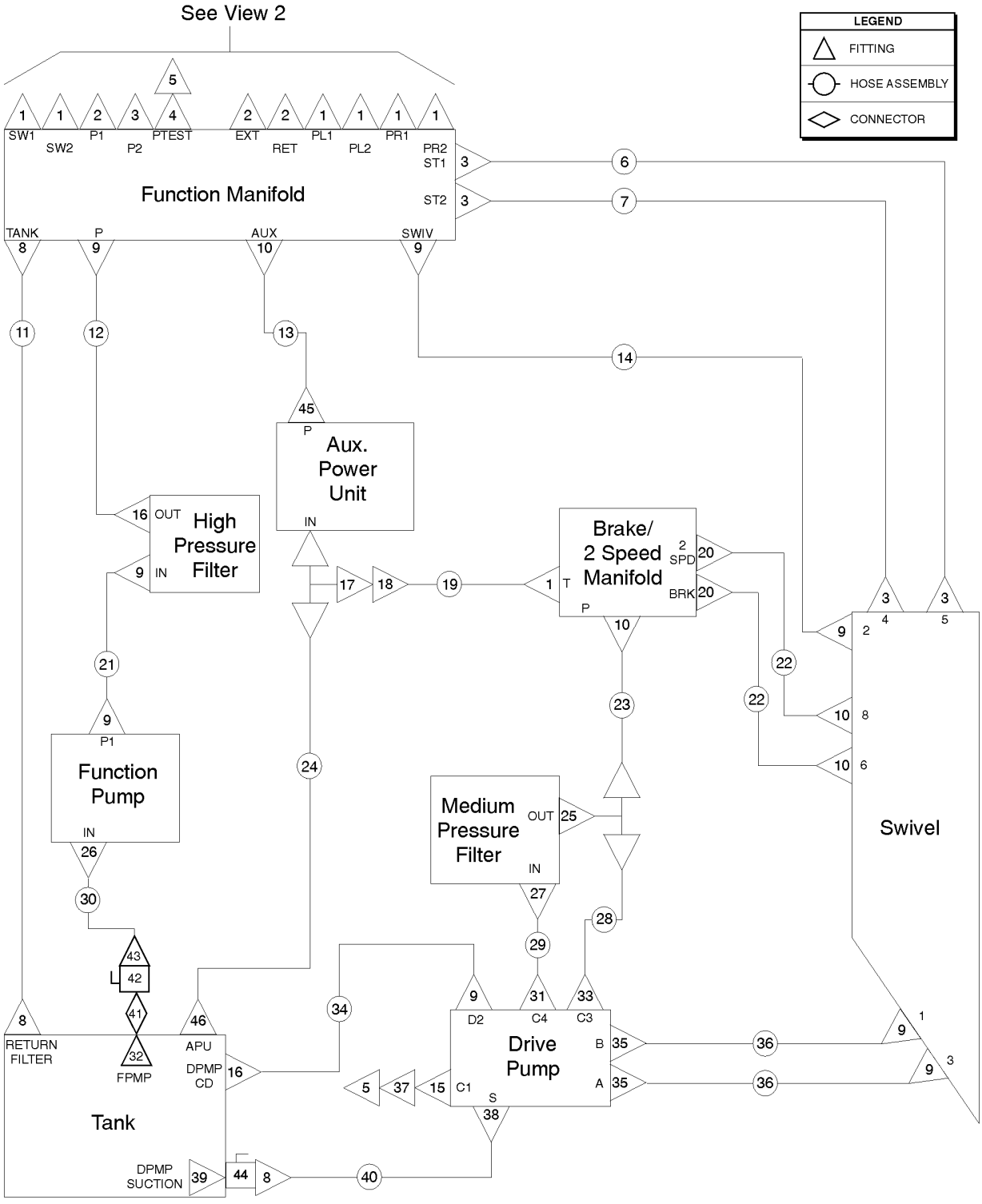

801.1
S60/65

801.1 Function Manifold - View 1

Item	Part No.	Description	Qty.
		The hose lengths below reflect the length of the hose only. Refer to the 'Fittings Cross Reference' to match Genie part numbers to Parker part numbers.	
1	48905GT	CONNECTOR, 520120-4	7
2	48933GT	CONN,520120-8***	3
3	48916GT	CONN, 520120-6	5
4	48998GT	NIPPLE,DIAGNOSTIC,#6 PORT***	1
5	48880GT	CAP,DIAGNOSTIC NIPPLE	1
6	49130-5782GT	HOSE ASSY 3/8, STR FEM,STR FEM Components: Genie part numbers 48812, 48812 and 48753 @ 56 inches	1
7	49130-5582GT	HOSE ASSY 3/8, STR FEM,STR FEM Components: Genie part numbers 48812, 48812 and 48753 @ 54 inches	1
8	48984GT	CONN, 520120-16	2
9	48960GT	FITTING,CONN,520120-12***	6
10	48904GT	ELBOW, 90D, 520220-4	4
11	88949-3828GT	HOSE ASSY 1",STR FEM,STR FEM Components: Genie part numbers 88938, 88941 and 88940 @ 36 inches	1
12	61074-7572GT	HOSE ASSEMBLY 3/4" STR-STR Components: Genie part numbers 48841, 48841 and 48762 @ 72 inches (from SN 21001 to 21204)	1
12-	61074-7272GT	HOSE ASSEMBLY 3/4"STR-STR Components: Genie part numbers 48841, 48841 and 48762 @ 70 inches (from SN 21205)	
13	49117-2491GT	HOSE ASSY,1/4,90 FEM,STR FEM Components: Genie part numbers 48802, 48800 and 48751 @ 23 inches	1
14	49151-6248GT	HOSE ASSY,3/4,STR FEM,STR FEM Components: Genie part numbers 48841, 48841 and 48761 @ 60 inches	1
15	48914GT	CONN,520120-4-8	1
16	48963GT	FITTING,ELBOW,45D,520320-12***	1
17	48936GT	TEE,BRANCH,520429-8	1
18	48941GT	REDUCER,520123-8-4	2
19	49117-4691GT	HOSE ASSY,1/4,90 FEM,STR FEM Components: Genie part numbers 48800, 48802 and 48751 @ 45 inches	1
20	48907GT	ELBOW,45D,520320-4	2
21	61073-3930GT	HOSE ASSY.,3/4",90,FEM,STR FEM Components: Genie part numbers 48846, 48841 and 48762 @ 36 inches	1
22	49119-2878GT	ASSY, HOSE, HYD, -4, 3250, STR, STR Components: Genie part numbers 48800, 48800 and 48751 @ 27 inches	2
23	49117-3391GT	HOSE ASSY,1/4,90 FEM,STR FEM Components: Genie part numbers 48800, 48802 and 48751 @ 32 inches	1
24	94465-3650GT	HOSE ASSY,1/2" Components: Genie part numbers 48808, 48808 and 39888 @ 35 inches	1
25	48936GT	TEE,BRANCH,520429-8	1

801.1 Function Manifold - View 1

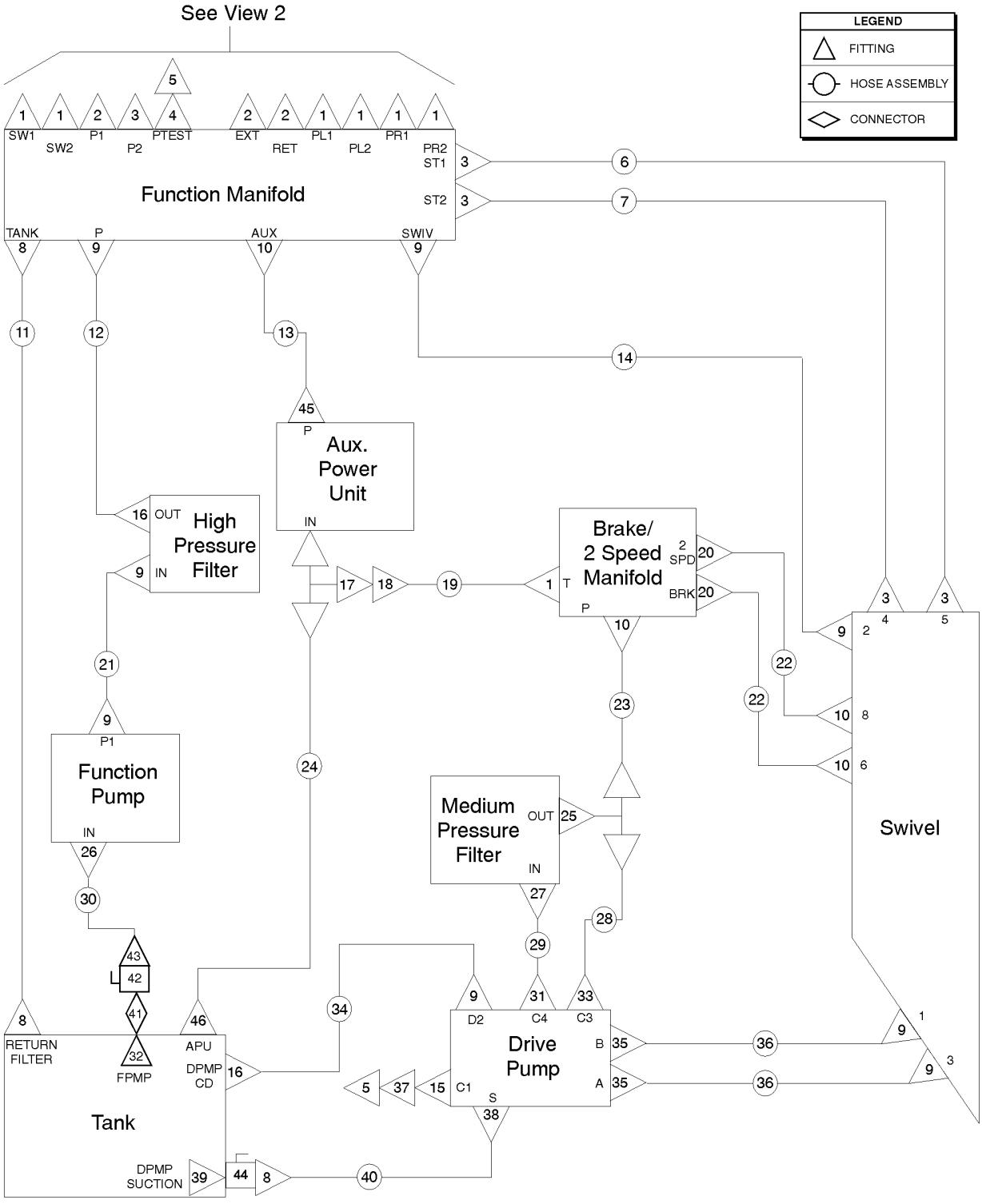

801.1
S60/65

801.1 Function Manifold - View 1

Item	Part No.	Description	Qty.
26	88936GT	CONN,520120-20-16	1
27	48932GT	FITTING,ELBOW,90D,520220-8***	1
28	49143-3429GT	HOSE ASSY,1/2,90 FEM,STR FEM Components: Genie part numbers 48822, 48827 and 48756 @ 32 inches	1
29	49143-3629GT	HOSE ASSY,1/2,90 FEM,STR FEM Components: Genie part numbers 48822, 48827 and 48756 @ 34 inches	1
30	88943-7636GT	HOSE ASSY,1.25",90 FEM,STR FEM Components: Genie part numbers 88474, 88477, 88944 and 88478 @ 72.5 inches	1
31	48949GT	CONN,520120-8-16	1
32	101491GT	STRAINER,20 SAE F/24 SAE M***	
33	48946GT	CONN,520120-8-10	1
34	49150-9130GT	HOSE ASSY,3/4,90 FEM,STR FEM Components: Genie part numbers 48841, 48846 and 48761 @ 88 inches	1
35	48977GT	CONN,520120-12-16	2
36	94374-6030GT	HOSE ASSY,3/4,90 FEM,STR FEM Components: Genie part numbers 48841, 48846 and 84358 @ 57 inches	2
37	49207GT	NIPPLE,DIAGNOSTIC,ORFS,FM,SWIV	1
38	48985GT	ELBOW,45D,520320-16	1
39	147419GT	KIT,STRAINER REPLACEMENT	1
40	88942-8354GT	HOSE ASSY,1",90 FEM,STR FEM Components: Genie part numbers 88938, 88941, 88939 and 88940 @ 80 inches	1
41	61263GT	UNION,STR.THREAD 20	1
42	101494GT	VALVE,BALL,FSAE-20,FSAE-20	1
43	75654GT	CONN,520120-20	1
44	48996GT	VALVE,BALL,16 MSAE-16 FSAE***	1
45	48912GT	CONN,520120-4-6***	1
46	48943GT	FITTING,CONN,520120-8-6	1

802.1 Function Manifold - View 2

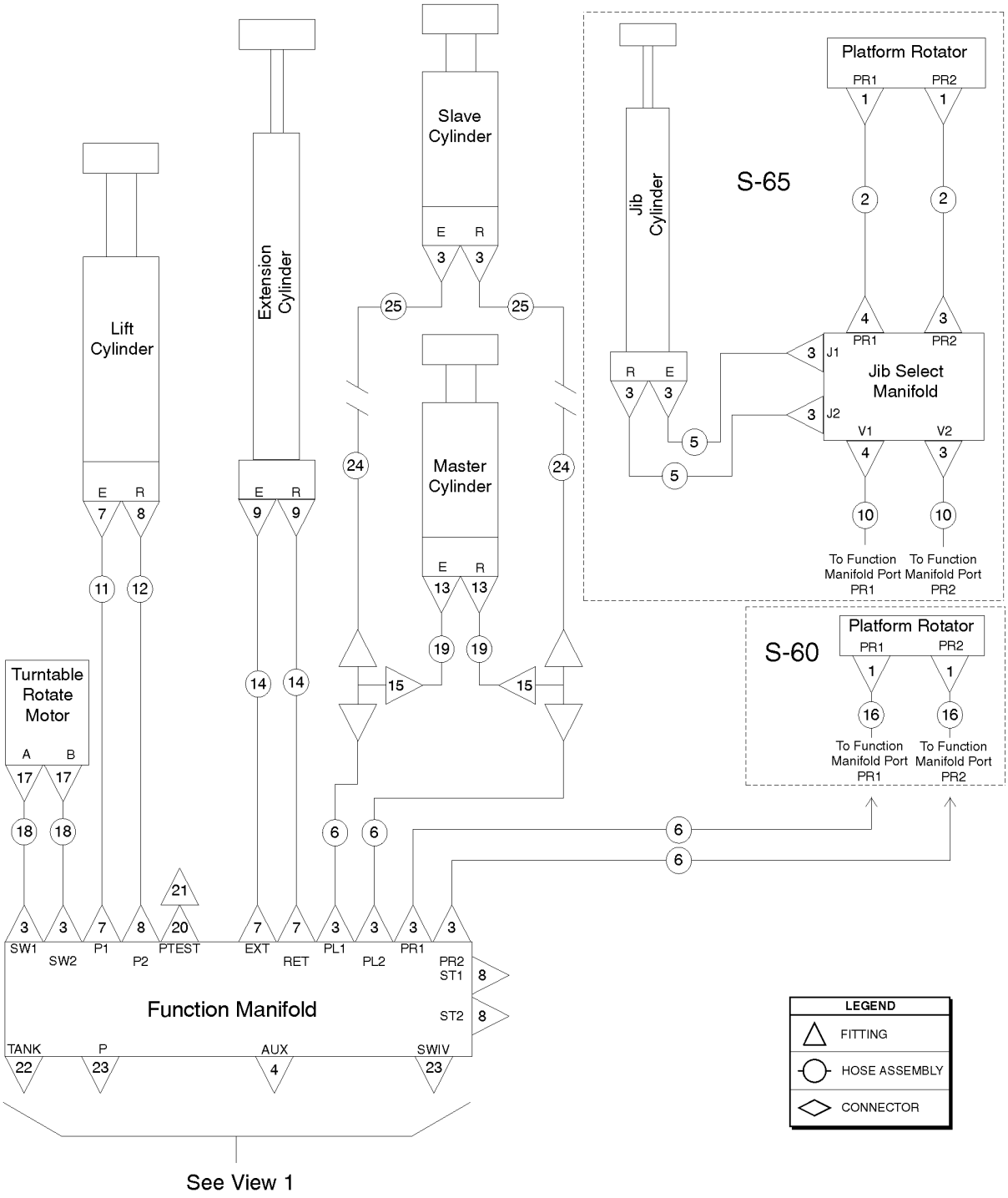

802.1 Rev B
S60/65

802.1 Function Manifold - View 2

Item	Part No.	Description	Qty.
-		The hose lengths below reflect the length of the hose only. Refer to the 'Fittings Cross Reference' to match Genie part numbers to Parker part numbers.	
-	49219GT	SLEEVE,NYLON,2.19 ID,BULK protective hose sleeve, 2.19" diameter (near platform rotator)	46 inches
-	48767GT	SLEEVE,NYLON,1.42 ID protective hose sleeve, 1.42" diameter (near platform rotator)	23 inches
1	48907GT	ELBOW,45D,520320-4	2
2	49119-2878GT	ASSY, HOSE, HYD, -4, 3250, STR, STR	2
3	48905GT	CONNECTOR, 520120-4	11
4	48904GT	ELBOW, 90D, 520220-4	2
5	49119-4278GT	ASSY, HOSE, HYD, -4, 3250, STR, STR	2
6	88636-11973GT	HOSE ASSY 1/4,STR FEM,STR BULK	4
7	48933GT	CONN,520120-8***	4
8	48916GT	CONN, 520120-6	3
9	48937GT	ELBOW,45D,520320-8	2
10	49119-79678GT	HOSE ASSY,1/4,STR FEM,STR FEM	
11	49143-13829GT	HOSE ASSY,1/2,90 FEM,STR FEM to SN 21234	1
11B	49143-12329GT	HOSE ASSY,1/2,90 FEM,STR FEM from SN 21235	1
12	49128-13809GT	HOSE ASSY 3/8,STR FEM,90D SN 21234	1
12B	49128-12309GT	HOSE ASSY,3/8,STR FEM,STR,90D rom SN 21235	1
13	48911GT	ELBOW,90D,520220-4-6***	2
14	49183-13492GT	HOSE ASSY,1/2,STR FEM,STR FEM	2
15	48908GT	FITTING,TEE,RUN,SWIVEL520432-4	2
16	49119-72078GT	HOSE ASSY,1/4,STR FEM,STR FEM	
17	49418GT	FITTING,ELBOW,45D,520320-4-6**	2
18	49119-7478GT	HOSE ASSY,1/4,STR FEM,STR FEM	2
19	49117-3791GT	HOSE ASSY,1/4,90 FEM,STR FEM** to SN 21459	2
19B	49117-3791GT	HOSE ASSY,1/4,90 FEM,STR FEM** from SN 21460	1
19B	49117-3800GT	HOSE ASSY,1/4,90 FEM,STR FEM from SN 21460	

802.1 Function Manifold - View 2

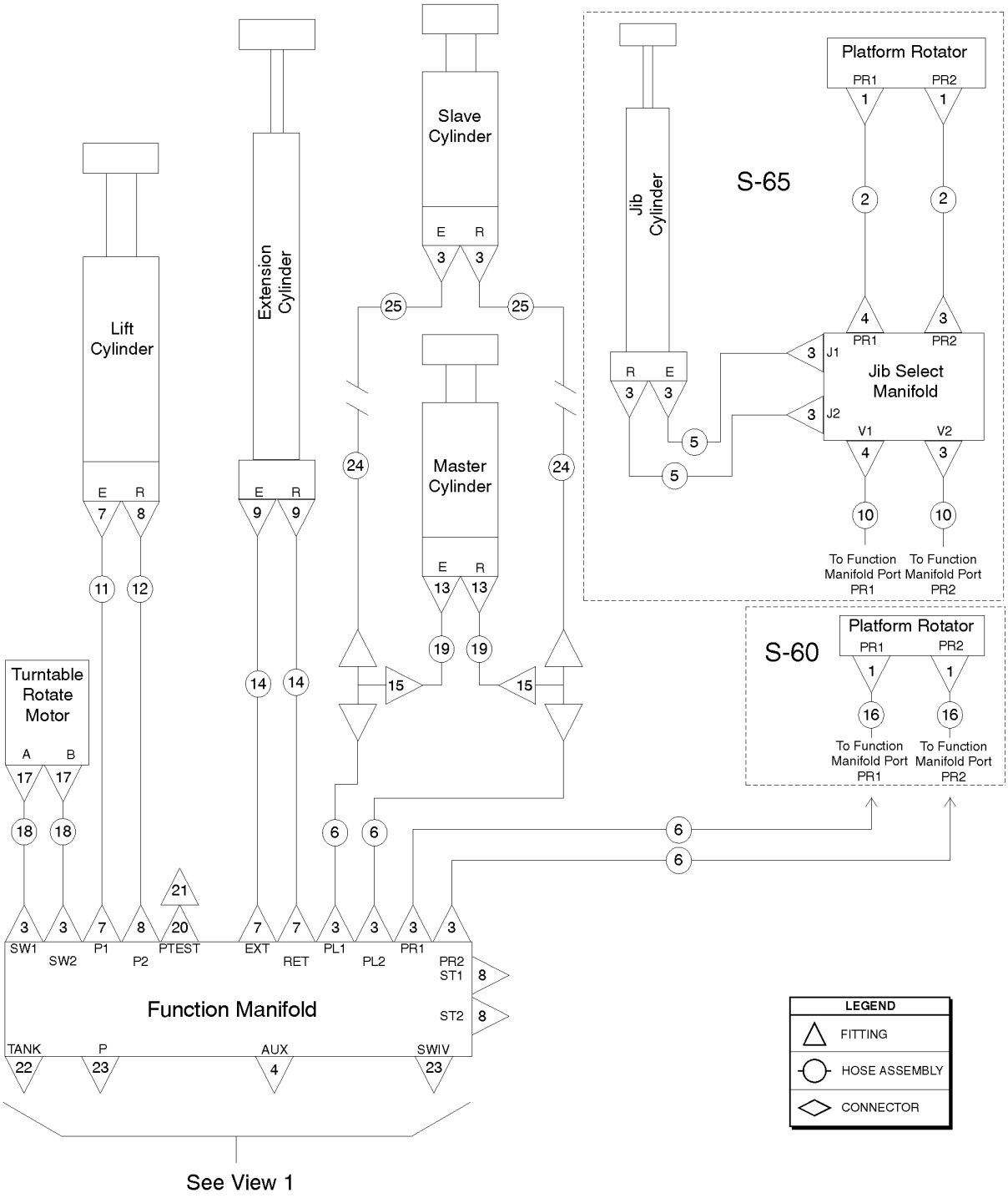

802.1 Rev B
S60/65

802.1 Function Manifold - View 2

Item	*Part No.*	*Description*	*Qty.*
20	48998GT	NIPPLE,DIAGNOSTIC,#6 PORT***	1
21	48880GT	CAP,DIAGNOSTIC NIPPLE	1
22	48984GT	CONN, 520120-16	1
23	48960GT	FITTING,CONN,520120-12***	1
24	49119-70978GT	HOSE ASSY,1/4,STR FEM,STR FEM to SN 24756	
24B	49119-69825GT	ASSY, HOSE, HYD, -4, 3250, STR, STR from SN 24757	
25	88636-2573GT	HOSE ASSY 1/4,STR FEM,STR BULK	2
25-	75574GT	NUT,BULKHEAD,520118-4 (item sold seperately)	

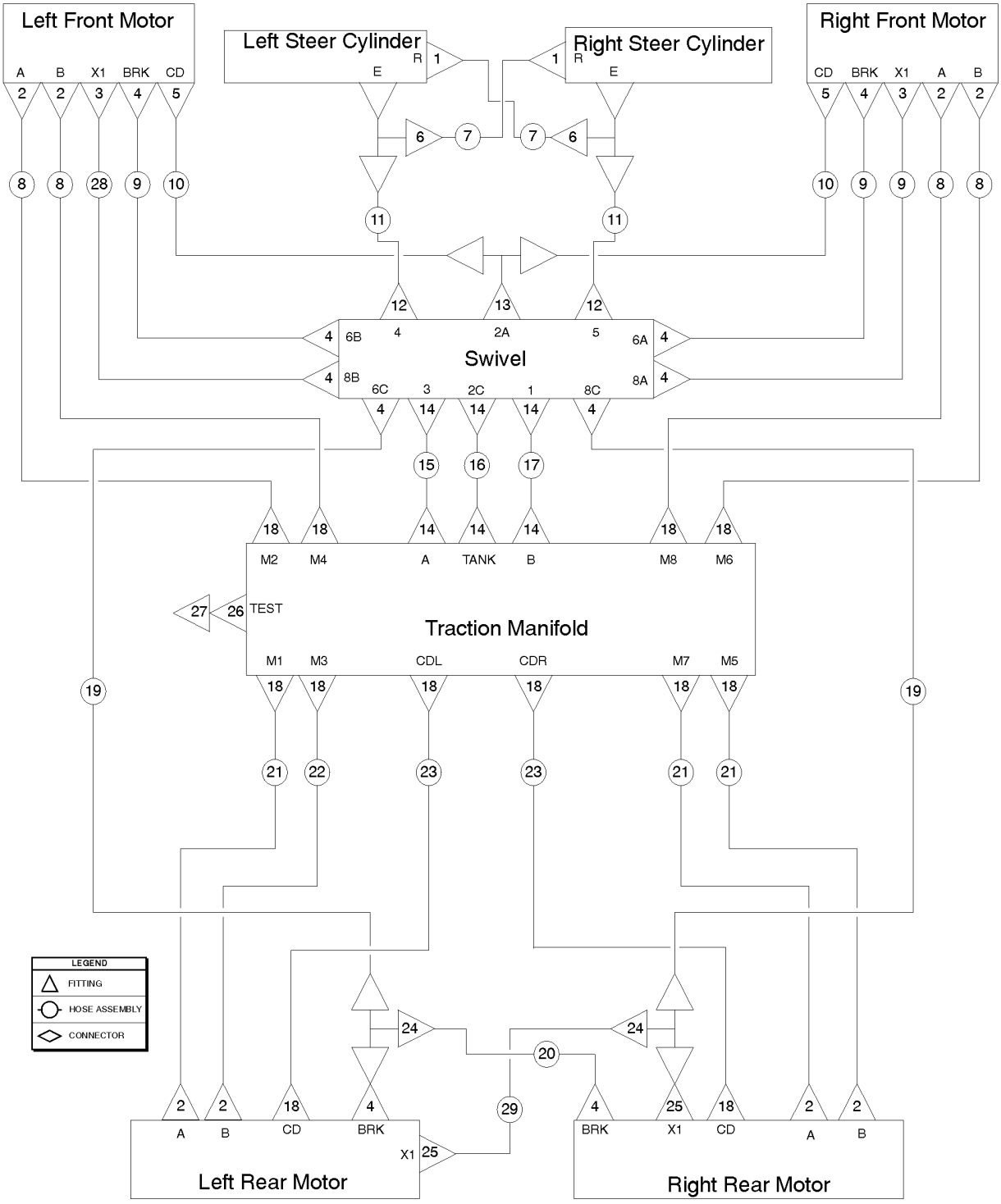
Left Front Motor
A B X1 BRK CD
Left Steer Cylinder
R E
Right Steer Cylinder
R E
Right Front Motor
CD BRK X1 A B
Swivel
6B 2A 6A
8B 6C 2C 8C 8A
Traction Manifold
M2 M4 A TANK B M8 M6
TEST
M1 M3 CDL CDR M7 M5
LEGEND
FITTING
HOSE ASSEMBLY
CONNECTOR
Left Rear Motor
A B CD BRK X1
Right Rear Motor
BRK X1 CD A B

Item	Part No.	Description	Qty.
		The hose lengths below reflect the length of the hose only. Refer to the 'Fittings Cross Reference' to match Genie part numbers to Parker part numbers.	
1	48915GT	ELBOW,90D,520220-6	2
2	48948GT	CONN,520120-8-12	8
3	48912GT	CONN,520120-4-6***	2
4	48905GT	CONNECTOR, 520120-4	10
5	48930GT	CONN,520120-6-8	2
6	48918GT	TEE,RUN,520428-6	2
7	49130-2482GT	ASSY, HOSE, HYD, 3/8, 3000, STR Components: Genie part numbers 48812, 48812 and 48753 @ 23 inches	2
7-	101795-2482GT	HOSE ASSY,3/8,STR FEM,STR FEM Components: Genie part numbers 48812, 48812 and 101697 @ 23 inches (arctic option)	
8	81812-13292GT	HOSE ASSY,1/2" Components: Genie part numbers 48822, 48822 and 56777 @ 131 inches	4
9	49117-10091GT	HOSE ASSY 1/4.90 FEM STR FEM Components: Genie part numbers 48800, 48802 and 48751 @ 99 inches	3
9-	101790-10091GT	HOSE ASSY,1/4,90 FEM,STR FEM Components: Genie part numbers 48800, 48802 and 101697 @ 99 inches (arctic option)	
10	49131-9603GT	HOSE ASSEMBLY 3/8" Components: Genie part numbers 48812, 48819 and 48753 @ 94 inches	2
10-	102230-9589GT	HOSE ASSY,3/8,STR FEM,STR FEM Components: Genie part numbers 48812, 48819 and 101698 @ 94 inches (arctic option)	
11	49130-4782GT	HOSE ASSY,3/8,STR FEM,STR FEM Components: Genie part numbers 48812, 48812 and 48753 @ 46 inches	2
12	48916GT	CONN, 520120-6	2
13	48936GT	TEE,BRANCH,520429-8	1
14	48960GT	FITTING,CONN,520120-12***	6
15	94374-2430GT	HOSE ASSY,3/4,90 FEM,STR FEM Components: Genie part numbers 48841, 48846 and 94358 @ 21 inches	1
16	94466-2336GT	HOSE ASSY,3/4" Components: Genie part numbers 48809, 48809 and 39889 @ 21 inches	1
17	94374-2630GT	HOSE ASSY,3/4,90 FEM,STR FEM** Components: Genie part numbers 48841, 48846 and 94358 @ 23 inches	1
18	48933GT	CONN,520120-8***	12
19	49119-7578GT	HOSE ASSY,1/4 STR FEM,STR FEM Components: Genie part numbers 48800, 48800 and 48751 @ 74 inches	2
20	49117-6291GT	HOSE ASSY,1/4,90 FEM,STR FEM Components: Genie part numbers 48800, 48802 and 48751 @ 61 inches	1
21	75278-5029GT	HOSE ASSY,1/2,90 FEM,STR FEM Components: Genie part numbers 48822, 48827 and 56777 @ 48 inches	3
22	75278-5129GT	HOSE ASSY,1/2,90 FEM,STR FEM** Components: Genie part numbers 48822, 48827 and 56777 @ 49 inches	1
23	94464-4986GT	HOSE ASSY,1/2"*** Components: Genie part numbers 48808, 77703 and 39888 @ 48 inches	2
24	48908GT	FITTING,TEE,RUN,SWIVEL520432-4	2

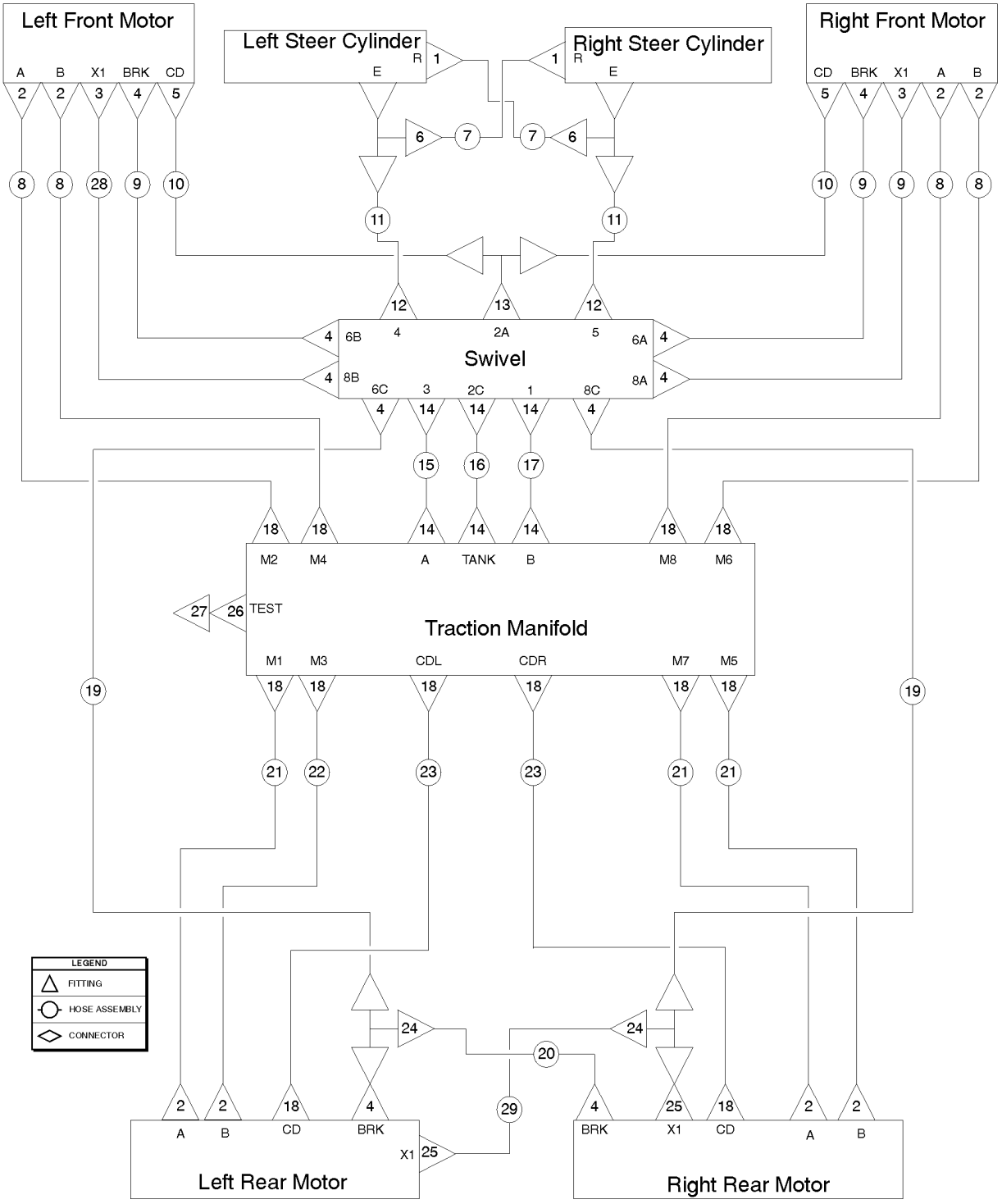
Left Front Motor
A B X1 BRK CD
Left Steer Cylinder
R E
Right Steer Cylinder
R E
Right Front Motor
CD BRK X1 A B
Swivel
6B 2A 6A
8B 6C 2C 8C 8A
Traction Manifold
M2 M4 A TANK B M8 M6
TEST
M1 M3 CDL CDR M7 M5
LEGEND
FITTING
HOSE ASSEMBLY
CONNECTOR
Left Rear Motor
A B CD BRK X1
Right Rear Motor
BRK X1 CD A B

Item	Part No.	Description	Qty.
25	48911GT	ELBOW,90D,520220-4-6***	2
26	48998GT	NIPPLE,DIAGNOSTIC,#6 PORT***	1
27	48880GT	CAP,DIAGNOSTIC NIPPLE	1
28	49117-10691GT	HOSE ASSY 1/4,90 FEM STR FEM Components: Genie part numbers 48800, 48802 and 48751 @ 105 inches	1
28-	101790-10691GT	HOSE ASSY,1/4,90 FEM,STR FEM Components: Genie part numbers 48800, 48802 and 48751 @ 105 inches (arctic option)	
29	49117-6091GT	HOSE ASSY,1/4,90 FEM,STR FEM** Components: Genie part numbers 48800, 48802 and 48751 @ 59 inches	1

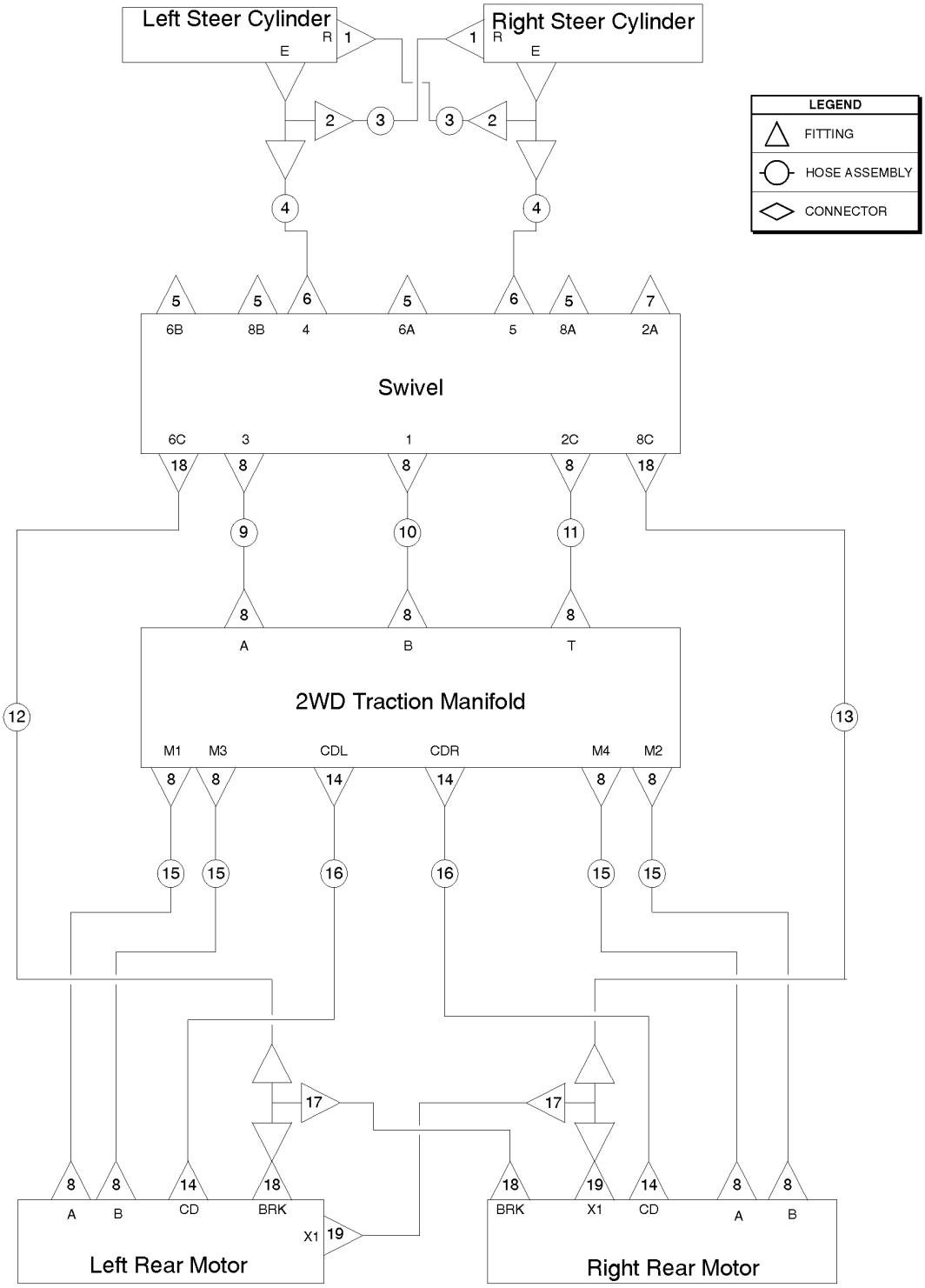
Left Steer Cylinder
Right Steer Cylinder
LEGEND
FITTING
HOSE ASSEMBLY
CONNECTOR
Swivel
2WD Traction Manifold
Left Rear Motor
Right Rear Motor

Item	Part No.	Description	Qty.
		The hose lengths below reflect the length of the hose only. Refer to the 'Fittings Cross Reference' to match Genie part numbers to Parker part numbers.	
1	48915GT	ELBOW,90D,520220-6	2
2	48918GT	TEE,RUN,520428-6	2
3	49130-2482GT	ASSY, HOSE, HYD, 3/8, 3000, STR Components: Genie part numbers 48812, 48812 and 48753 @ 23 inches	2
4	49130-4782GT	HOSE ASSY,3/8,STR FEM,STR FEM Components: Genie part numbers 48812, 48812 and 48753 @ 46 inches	2
4-	101795-4782GT	HOSE ASSY,3/8,STR FEM,STR FEM Components: Genie part numbers 48812, 48812 and 101698 @ 46 inches (arctic option)	
5	49859GT	PLUG,HEX,090109A-4	4
6	48916GT	CONN, 520120-6	2
7	48883GT	PLUG,HEX,090109A-8***	1
8	48960GT	FITTING,CONN,520120-12***	14
9	94374-2330GT	HOSE ASSY,3/4,90 FEM,STR FEM Components: Genie part numbers 48841, 48846 and 94358 @ 20 inches	1
10	94374-2530GT	HOSE ASSY,3/4,90 FEM,STR FEM Components: Genie part numbers 48841, 48846 and 94358 @ 22 inches	1
11	94466-2336GT	HOSE ASSY,3/4"	1
12	49119-7578GT	HOSE ASSY,1/4 STR FEM,STR FEM Components: Genie part numbers 48800, 48800 and 48751 @ 74 inches	1
13	49119-7578GT	HOSE ASSY,1/4 STR FEM,STR FEM Components: Genie part numbers 48800, 48800 and 48751 @ 74 inches	1
14	48933GT	CONN,520120-8***	4
15	94374-4730GT	HOSE ASSY,3/4,90 FEM,STR FEM Components: Genie part numbers 48841, 48846 and 94358 @ 44 inches	4
16	94464-4986GT	HOSE ASSY,1/2"*** Components: Genie part numbers 48808, 77703 and 39888 @ 48 inches	4
17	48908GT	FITTING,TEE,RUN,SWIVEL520432-4	2
18	48905GT	CONNECTOR, 520120-4	2
19	48911GT	ELBOW,90D,520220-4-6***	1

805.1 Oscillate Option

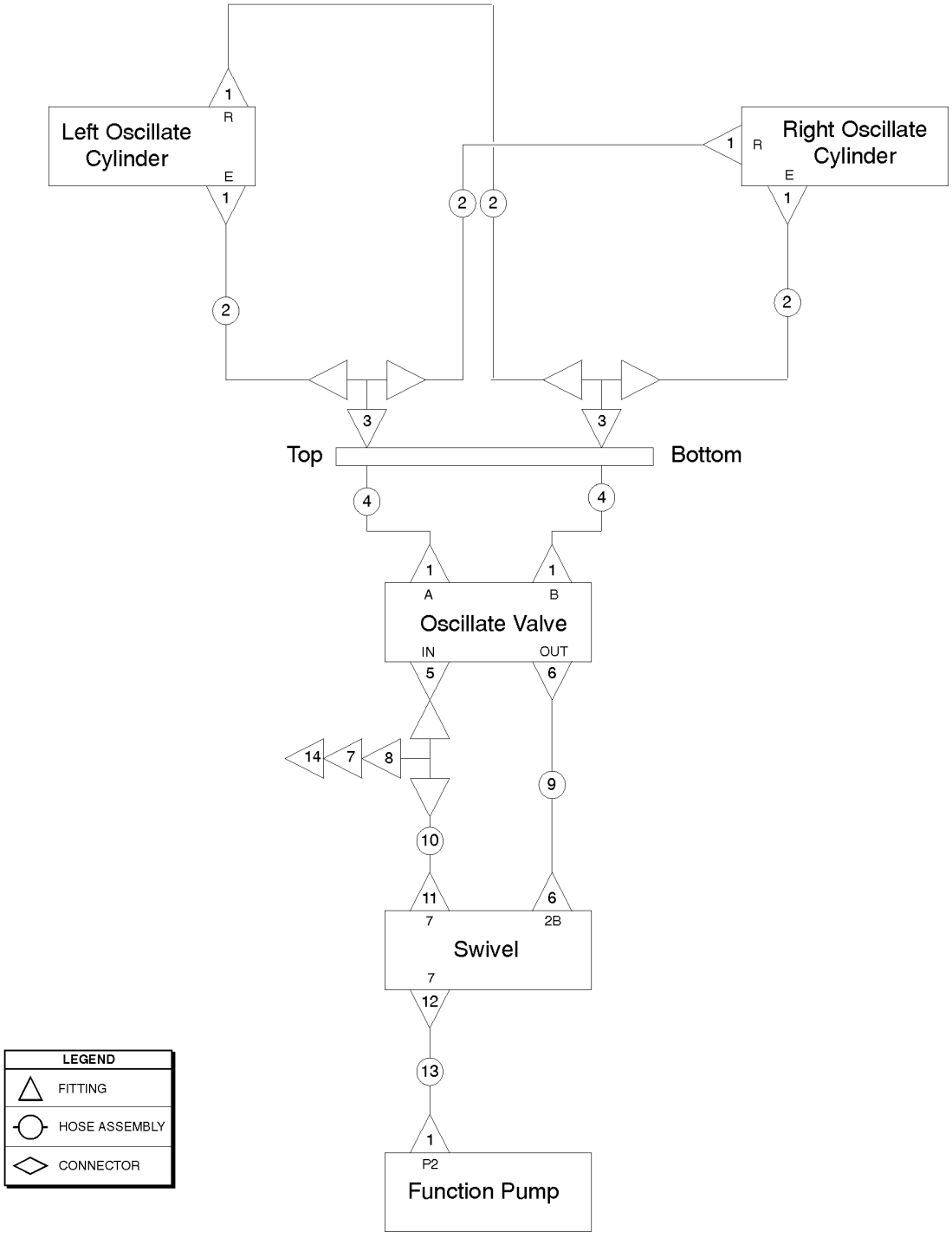

Item	Part No.	Description	Qty.
		The hose lengths below reflect the length of the hose only. Refer to the 'Fittings Cross Reference' to match Genie part numbers to Parker part numbers.	
1	48912GT	CONN,520120-4-6***	7
2	49117-3291GT	HOSE ASSY,1/4,90 FEM,STR FEM** Components: Genie part numbers 48800, 48802 and 48751 @ 31 inches	4
3	48891GT	FITTING,TEE,BRANCH,520433-4	2
4	88636-8573GT	HOSE ASSY 1/4,STR FEM,STR BULK Components: Genie part numbers 48800, 75628 and 48751 @ 83 inches	2
5	48914GT	CONN,520120-4-8	1
6	48933GT	CONN,520120-8***	2
7	49207GT	NIPPLE,DIAGNOSTIC,ORFS,FM,SWIV	1
8	48908GT	FITTING,TEE,RUN,SWIVEL520432-4	1
9	94464-4186GT	HOSE ASSY,1/2" Components: Genie part numbers 48808, 77703 and 39888 @ 40 inches	1
10	49117-4691GT	HOSE ASSY,1/4,90 FEM,STR FEM Components: Genie part numbers 48800, 48802 and 48751 @ 45 inches	1
11	48905GT	CONNECTOR, 520120-4	1
11-	49859GT	PLUG,HEX,090109A-4 models without oscillate	1
12	48904GT	ELBOW, 90D, 520220-4	1
13	49117-5191GT	HOSE ASSY,1/4,90 FEM,STR FEM** Components: Genie part numbers 48800, 48802 and 48751 @ 50 inches	1
14	48880GT	CAP,DIAGNOSTIC NIPPLE	1

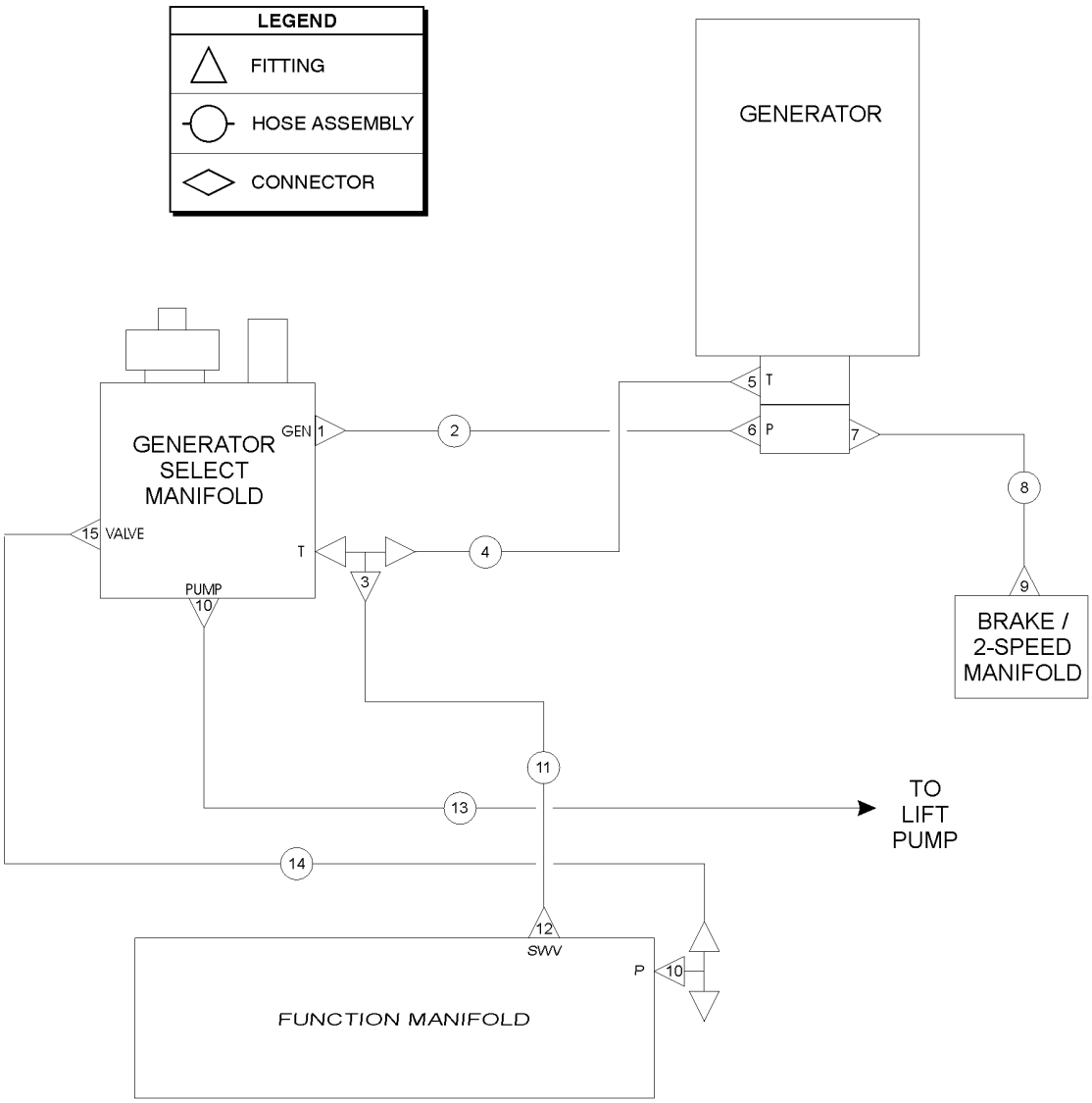
LEGEND
FITTING
HOSE ASSEMBLY
CONNECTOR
GENERATOR
GENERATOR SELECT MANIFOLD
GEN
1
2
5
T
6
P
7
8
15
VALVE
T
4
3
PUMP
10
9
BRAKE / 2-SPEED MANIFOLD
11
13
TO LIFT PUMP
14
12
SWV
P
10
FUNCTION MANIFOLD

Item	Part No.	Description	Qty.
		The hose lengths below reflect the length of the hose only. Refer to the 'Fittings Cross Reference' to match Genie part numbers to Parker part numbers.	
1	48933GT	CONN,520120-8***	1
2	49143-3179GT	HOSE ASSY,1/2,90 FEM,STR FEM Components: Genie part numbers 48822, 48827 and 48756 @ 29.5 inches	1
3	48935GT	TEE,RUN, 520428-8	1
4	49143-2979GT	HOSE ASSY,1/2,90 FEM,STR FEM Components: Genie part numbers 48822, 48827 and 48756 @ 27.5 inches	1
5	42790GT	ELBOW,45D,520320-8-10	1
6	48937GT	ELBOW,45D,520320-8	1
7	48905GT	CONNECTOR, 520120-4	1
8	49117-3691GT	HOSE ASSY,1/4,90 FEM,STR FEM Components: Genie part numbers 48800, 48802 and 48751 @ 35 inches	1
9	48908GT	FITTING,TEE,RUN,SWIVEL520432-4	1
10	48960GT	FITTING,CONN,520120-12***	1
11	49142-7112GT	HOSE ASSEMLY,1/2,90FEM,STR FEM Components: Genie part numbers 48822, 48839 and 48756 @ 68.5 inches	1
12	48964GT	TEE,RUN,SWIVEL,520432-12	1
13	61073-2830GT	HOSE ASSY,3/4",90 FEM, STR FEM Components: Genie part numbers 48841, 48846 and 48762 @ 25 inches	1
14	61074-6222GT	HOSE ASSEMBLY 3/4" STR-STR Components: Genie part numbers 48841, 48841 and 48762 @ 59.9 inches	1
15	48963GT	FITTING,ELBOW,45D,520320-12***	1

806.2 Hydraulic Generator Option (from SN 21397)

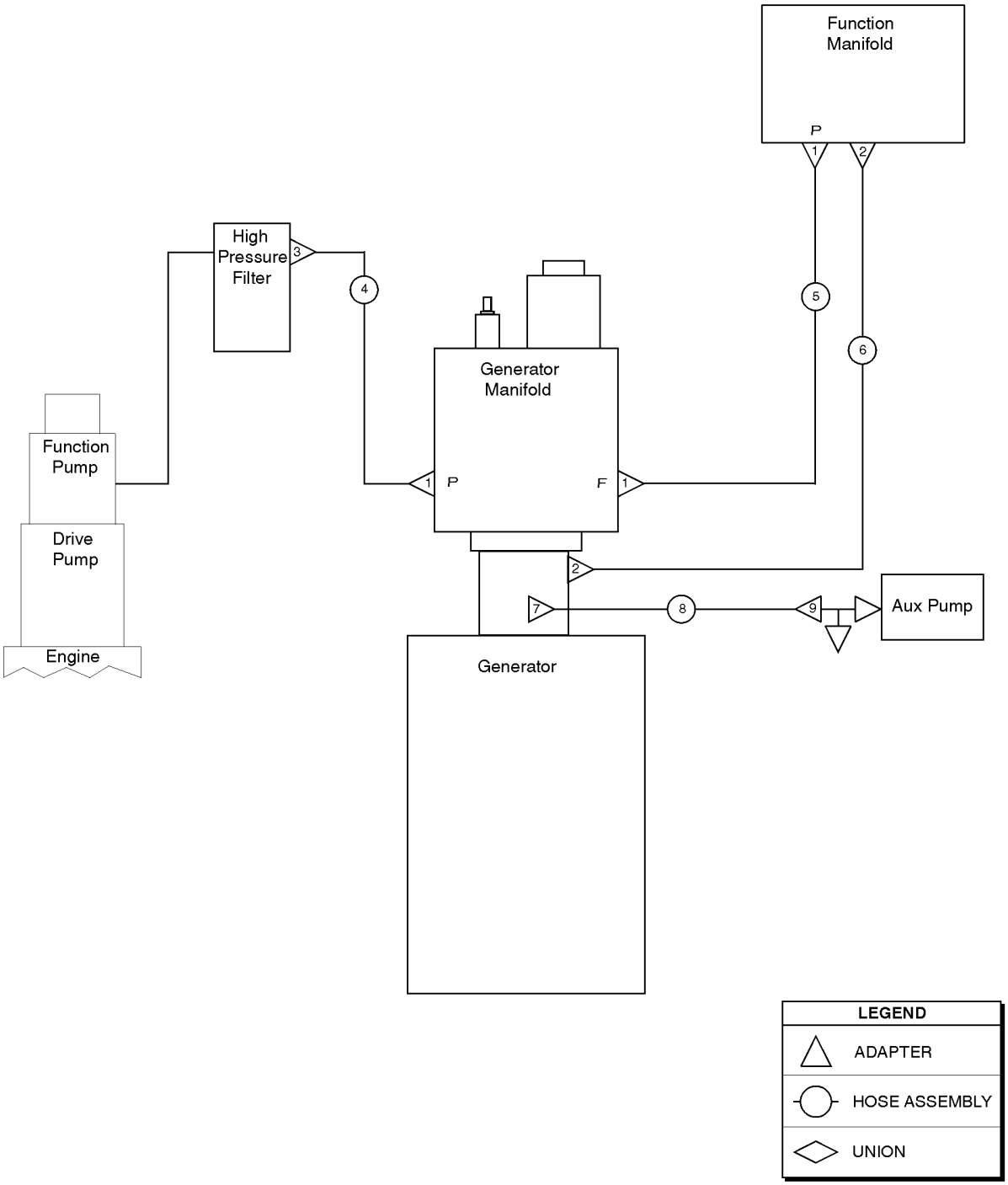

806.2 Hydraulic Generator Option (from SN 21397)

Item	*Part No.*	*Description*	*Qty.*
1	48960GT	FITTING,CONN,520120-12*** (includes 45° and reducer)	3
2	48933GT	CONN,520120-8***	2
3	48963GT	FITTING,ELBOW,45D,520320-12***	1
4	61073-3330GT	HOSE ASSY,3/4,90 FEM,STR FEM (components: 48841, 48846, and 48762 @ 29 inches)	1
5	61073-7330GT	HOSE ASSY,3/4,90 FEM,STR FEM (components: 48841, 48846, and 48762 @ 70 inches)	1
6	49183-7592GT	HOSE ASSEMBLY,1/2,STR FEM (components: 48822, 48822, and 48756 @ 74 inches)	1
7	49861GT	CONN,LONG,520122-4	1
8	49117-6119GT	HOSE ASSY,1/4,90 FEM,STR FEM** (components: 48800, 48802, and 48751 @ 60 inches)	1
9	48908GT	FITTING,TEE,RUN,SWIVEL520432-4	1

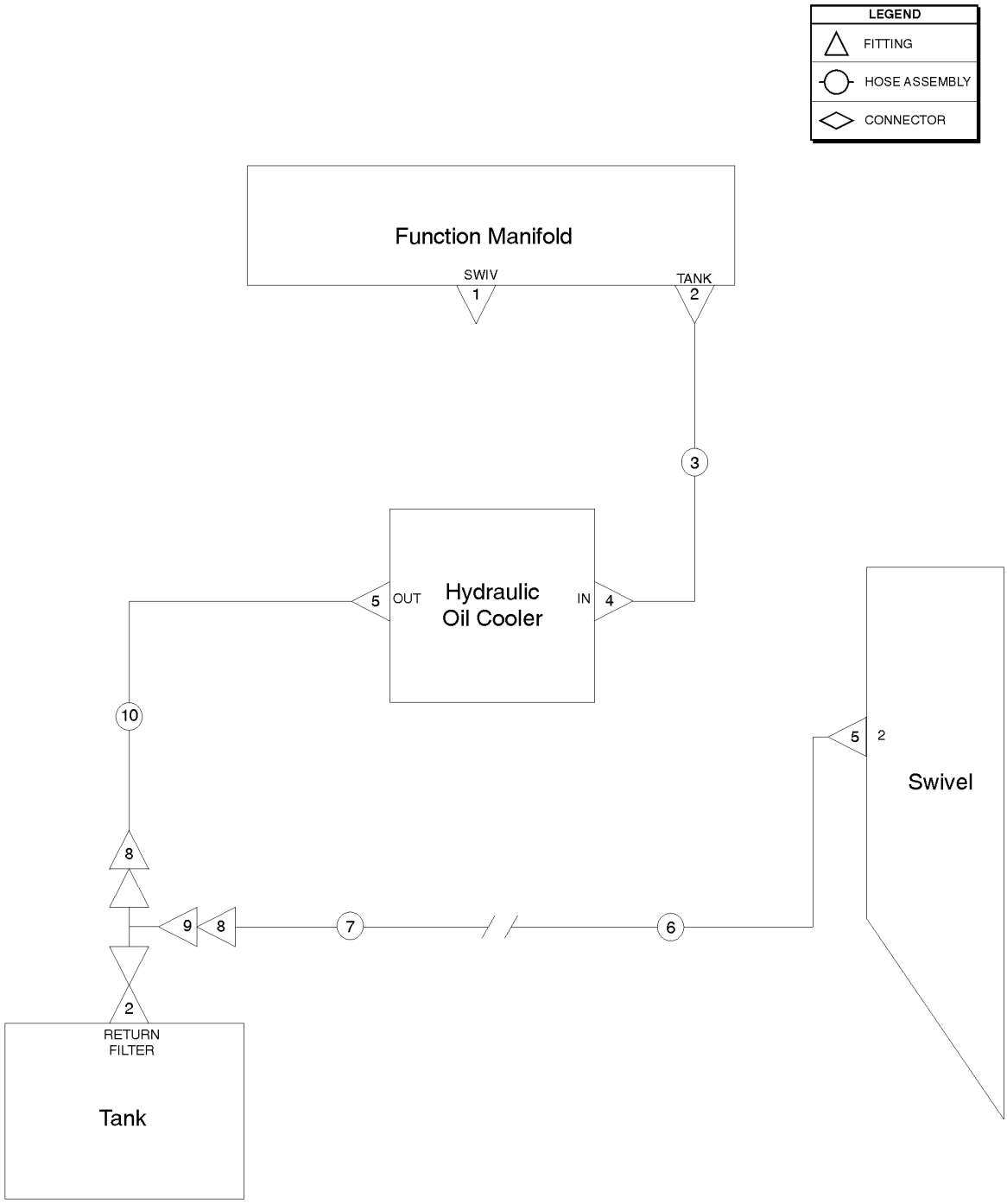
LEGEND
FITTING
HOSE ASSEMBLY
CONNECTOR
Function Manifold
SWIV
1
TANK
2
3
5
OUT
Hydraulic
Oil Cooler
IN
4
10
5
2
Swivel
8
9
8
7
6
2
RETURN
FILTER
Tank

Item	*Part No.*	*Description*	*Qty.*
1	87172GT	PLUG,HEX SOCKET,090109B-12	1
2	48984GT	CONN, 520120-16	2
3	88949-3828GT	HOSE ASSY 1",STR FEM,STR FEM	1
4	48878GT	ELBOW,90D,520220-16-12	1
5	48960GT	FITTING,CONN,520120-12***	2
6	49151-6248GT	HOSE ASSY,3/4,STR FEM,STR FEM	1
7	94205-3164GT	HOSE ASSY,3/4,45 FEM,STR MALE	1
8	101293GT	REDUCER,520123-16-12	2
9	42787GT	TEE,RUN,SWIVEL,520432-16	1
10	49150-2855GT	ASSY, HOSE, HYD, -12, 1750, STR, 90	1

808.1 Welder Option (to SN 26173)

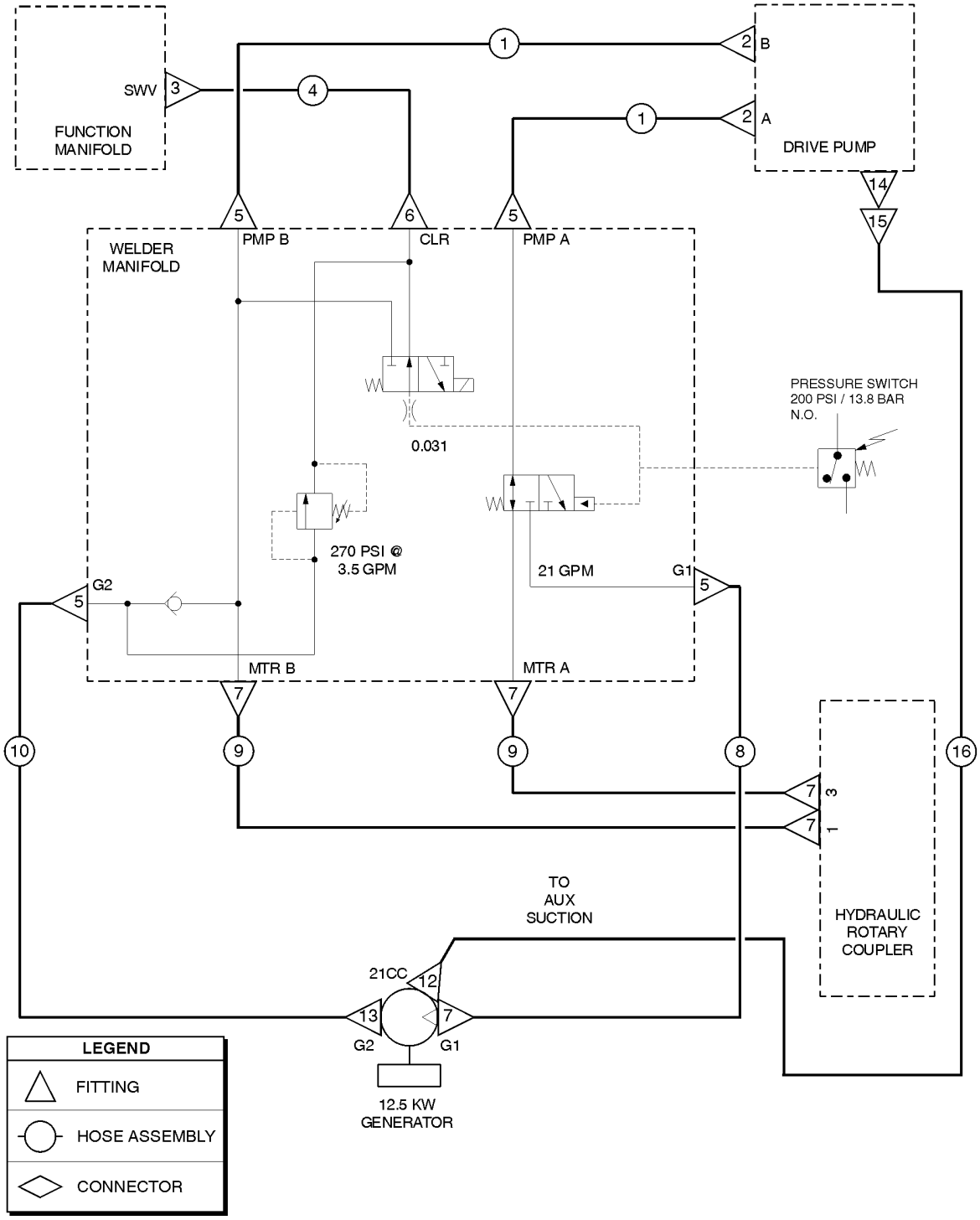

808.1 Welder Option (to SN 26173)

Item	Part No.	Description	Qty.
1	102313-3326GT	HOSE ASSY,3/4",45F,STR F	2
2	48978GT	ELBOW,45D,520320-12-16	1
3	48948GT	CONN,520120-8-12	1
4	49183-8492GT	HOSE ASSY,1/2,STR FEM,STR FEM*	1
5	48963GT	FITTING,ELBOW,45D,520320-12***	4
6	48933GT	CONN,520120-8***	1
7	48960GT	FITTING,CONN,520120-12***	5
8	61072-2443GT	HOSE ASSY,3/4,45 FEM,STR FEM**	1
9	94374-6030GT	HOSE ASSY,3/4,90 FEM,STR FEM	2
10	61072-2543GT	HOSE ASSY,3/4,45 FEM,STR FEM**	1
11	48941GT	REDUCER,520123-8-4	
12	48932GT	FITTING,ELBOW,90D,520220-8***	1
13	61610GT	CONN,LONG,520122-12***	1
14	48961GT	TEE,RUN,520428-12	1
15	51580GT	FITTING,REDUCER,520123-12-8***	1
16	49143-6213GT	ASSY, HOSE, HYD, -8, 3000, STR, 90	1

808.2 Welder Option (from SN 26174)

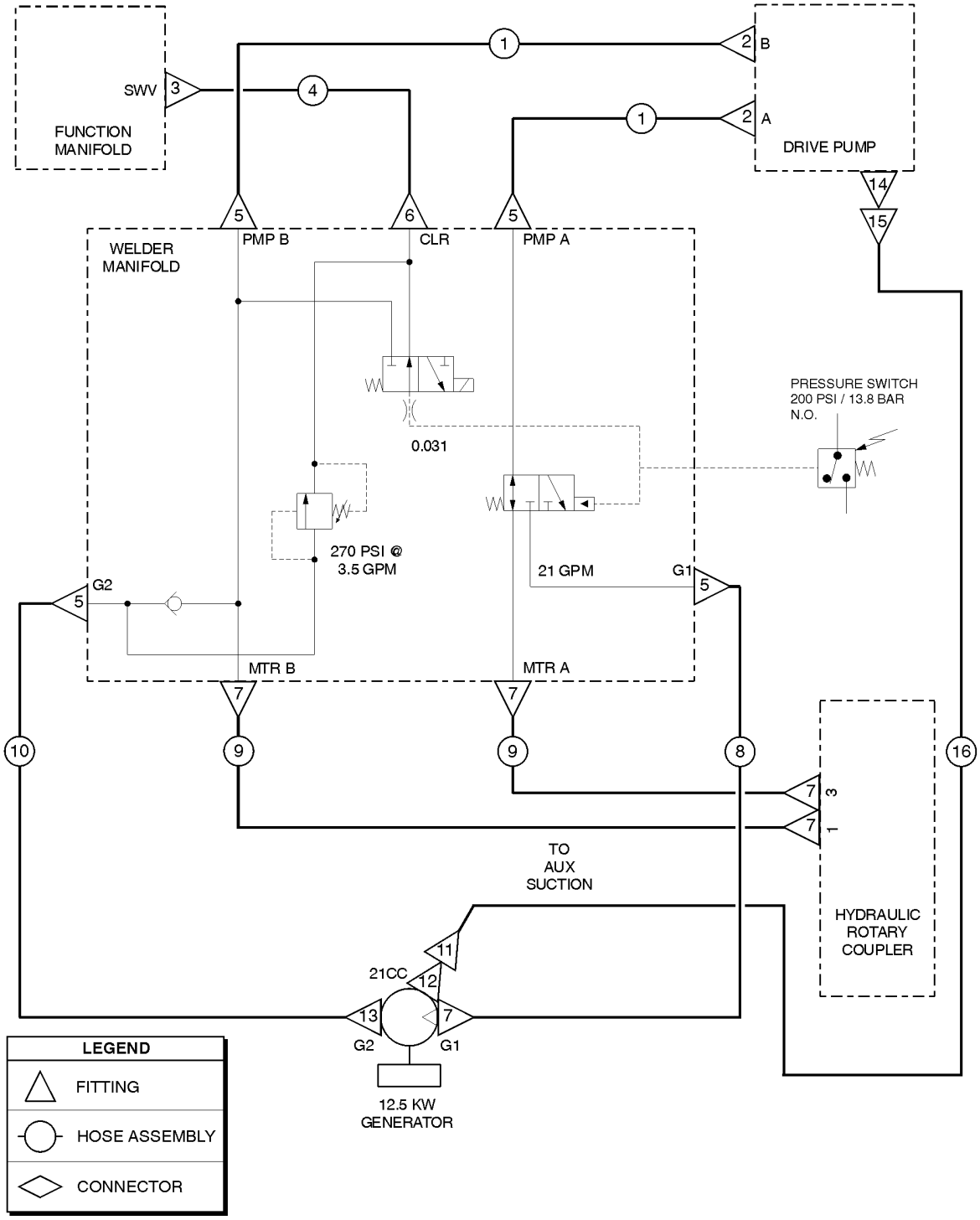

808.2 Welder Option (from SN 26174)

Item	Part No.	Description	Qty.
1	89871-4048GT	ASSY, HOSE, HYD, -12, 4000, STR, STR	2
2	48978GT	ELBOW,45D,520320-12-16	1
3	48948GT	CONN,520120-8-12	1
4	49183-8500GT	ASSY, HOSE, HYD, -8, 3000, STR, STR	1
5	48963GT	FITTING,ELBOW,45D,520320-12***	4
6	48933GT	CONN,520120-8***	1
7	48960GT	FITTING,CONN,520120-12***	5
8	61072-2426GT	ASSY, HOSE, HYD, -12, 3000, STR, 45	1
9	94374-6030GT	HOSE ASSY,3/4,90 FEM,STR FEM	2
10	61072-2526GT	ASSY, HOSE, HYD, -12, 3000, STR, 45	1
11	48941GT	REDUCER,520123-8-4	
12	48932GT	FITTING,ELBOW,90D,520220-8***	1
13	61610GT	CONN,LONG,520122-12***	1
14	48961GT	TEE,RUN,520428-12	1
15	51580GT	FITTING,REDUCER,520123-12-8***	1
16	49143-6213GT	ASSY, HOSE, HYD, -8, 3000, STR, 90	1

901.1 Alarm and Beacon Package

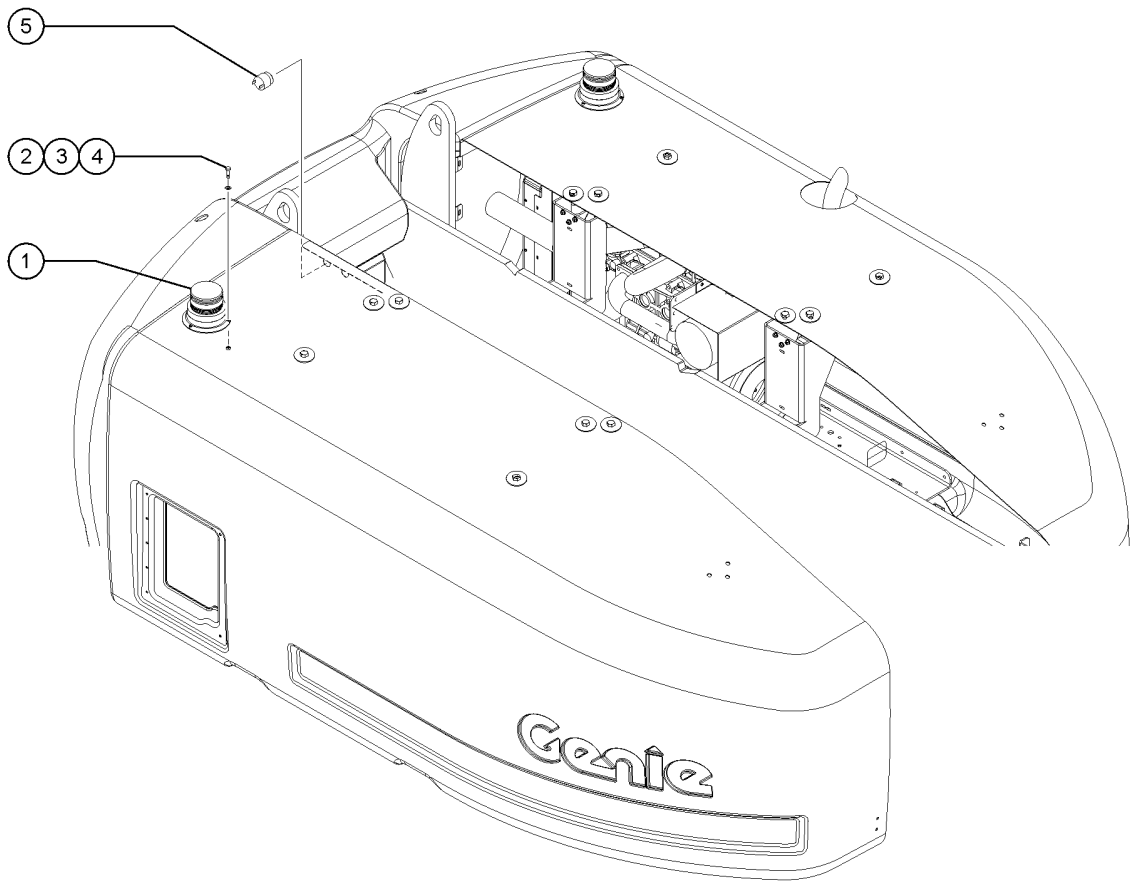

Item	*Part No.*	*Description*	*Qty.*
A	T109268GT	ACC, BEACON, TRVL ALARM,SERV	
1	56704GT	STROBE,FIREBOLT,12-80VDC,AMB**	2
1-	72282GT	LENS,AMBER,STROBE,FIREBOLT	
1-	122019GT	FLASHTUBE,U SHAPED,360DEG,BULB	
1-	226393GT	FLASHTUBE,STRAIGHT,360DEG,BULB	
2	6147GT	SCREW,RHM,10-32 X 1	6
3	6146GT	WASHER,FLAT,MS,#10,Y	6
4	6178GT	NUT, NYLOCK, 10-32	6
5	18963GT	ALARM, INTERMITTENT TONE 6-30V* 72326 nut not included, order separately	1
5	72326GT	NUT - PLASTIC, RING FOR ALARMS	1

902.1 Platform Accessories

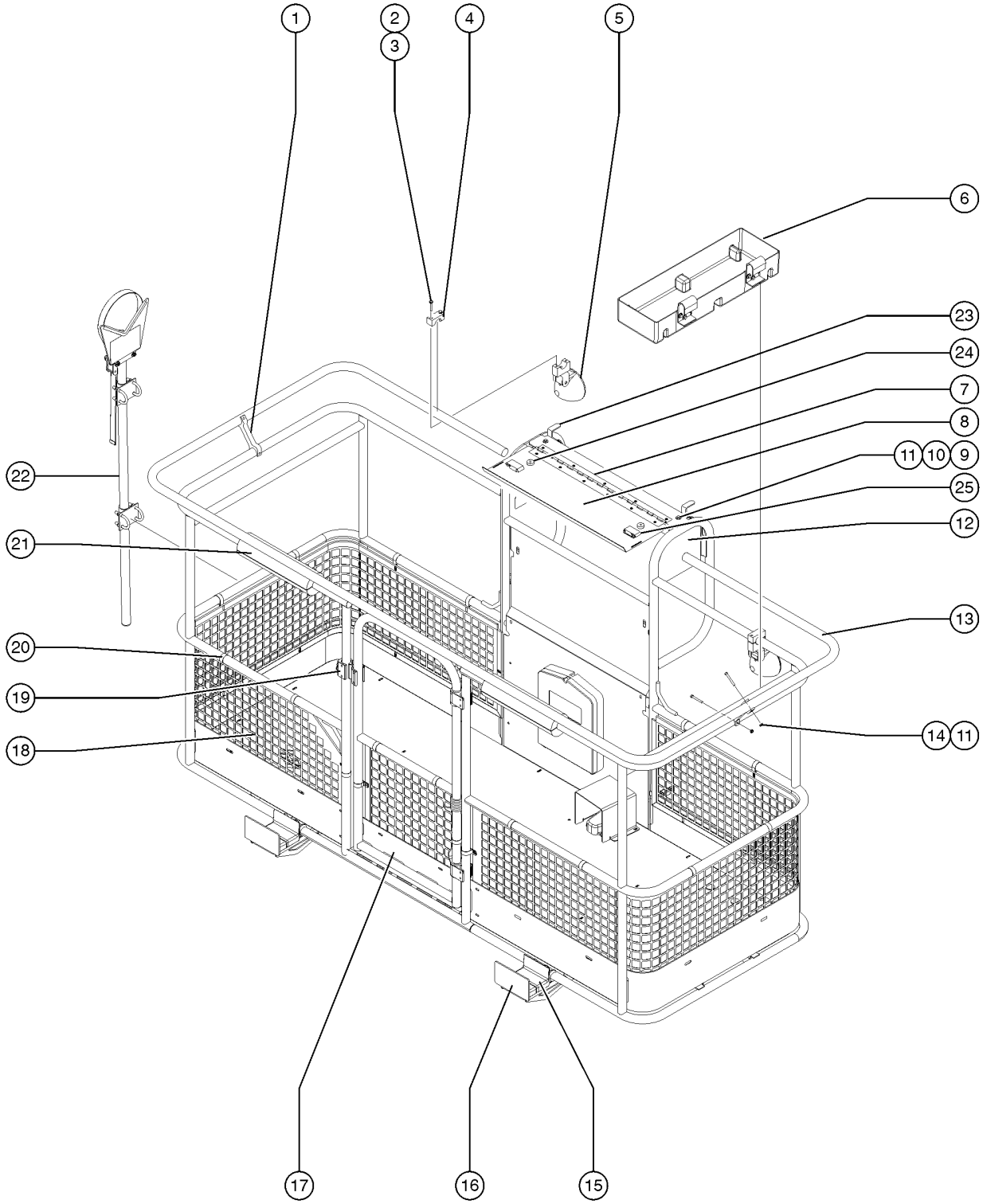

Item	Part No.	Description	Qty.
A	53808-SGT	AUX TOP RAIL,6'(1.25")SERVICE	
B	53807-SGT	AUX TOP RAIL,8'(1.25")SERVICE includes items 1, 11 and 13-14	
C	122278GT	AUX TOP RAIL,6',SWG GT, SRV	
D	122279GT	AUX TOP RAIL,8',SWG GT, SRV	
E	T109328GT	ACC,PLAT CONTROL COVER, SERV includes items 7-12 and 23-25	
1	139958GT	KIT, AUX TOP RAIL SUPPORT	10
1-	122073GT	SUPPORT, RAILING	
2	6145GT	SCREW, HHC, 1/4-20 X 1.5	
3	6356GT	WASHER, LOCK, .25	
4	35956GT	WORK LIGHT MOUNTING BRACKET	2
5		Ref. Worklight, 12V refer to 918.1	2
6	9599-SGT	TOOL TRAY ACCESSORY***	1
6-	7746GT	BRACKET-TOOL TRAY MOUNTING	2
7	111526GT	HINGE,PLAT CONTROL BOX COVER	1
7-	54486GT	RIVET,ALUM,ALUM,3/16BUTTONHEAD (not included - sold seperately)	
8	102785PGT	CONTROL BOX COVER,LID,PTD	1
8-	88606PGT	COVER,CONTROL BOX RIGHT SIDE** (not included - sold seperately)	1
8-	88607PGT	COVER,CONTROL BOX LEFT SIDE*** (not included - sold seperately)	1
9	824227GT	SCREW, BHC, 1/4-20 X 1, ZAG	
10	6638GT	WASHER, FLAT, USS, 1/4"Y No longer availabe	
11	824027GT	NUT, TL FLG, 1/4-20, G, ZAG	
12A	88606PGT	COVER,CONTROL BOX RIGHT SIDE**	1
12B	88607PGT	COVER,CONTROL BOX LEFT SIDE***	
13A	1259704GT	PINCH GUARD RAIL,6' PLATFORM includes 55753 bumpers	1
13A-	55753GT	BUMPER, PLASTIC, 1.25 O.D. not included, order seperately	2
13B	52661GT	PINCH GUARD RAIL,8' PLATFORM**	1
13B-	55753GT	BUMPER, PLASTIC, 1.25 O.D.	2
13C	111485PGT	AUX TOP RAIL,6FT,PTD for use with swing gate	2

902.1 Platform Accessories

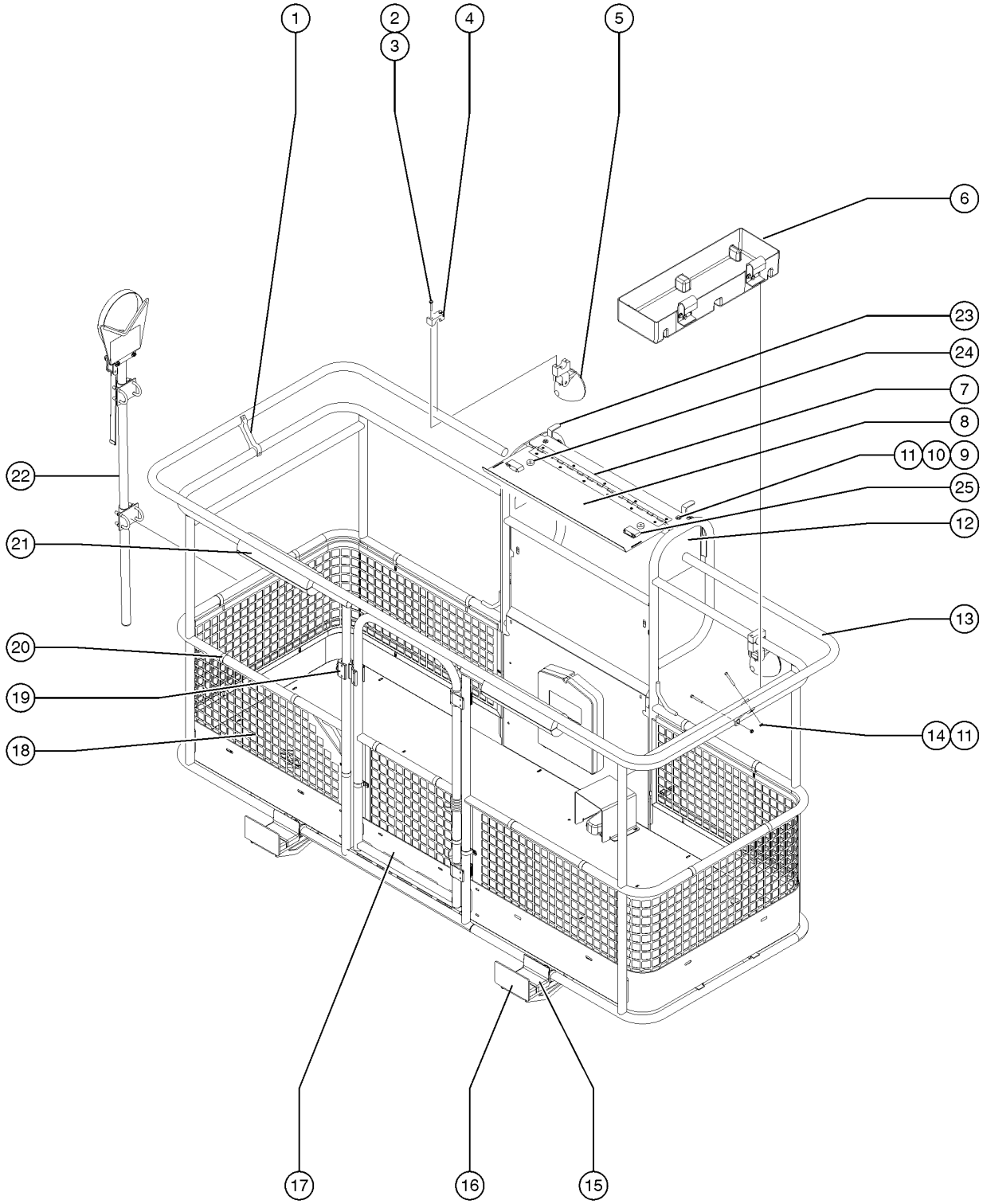

Item	Part No.	Description	Qty.
13D	111486PGT	AUX TOP RAIL,8FT,PTD for use with swing gate	2
13-	31120GT	PLUG,NYLON 1.187 BLACK DOMED	
14	4266GT	SCREW,HHC,1/4-20 X 2	
14B	824227GT	SCREW, BHC, 1/4-20 X 1, ZAG	
15		Ref., Rest Pad refer to 917.1	
16		Ref., Bracket refer to 917.1	
17	1290135GT	KIT,HALF FRONT,SWING GATE	
17	128368GT	KIT,SWING GATE W/SPRING	1
17-	9596GT	HINGE CASTING Special welding requirements for installation of this component. Strongly suggest ordering 128368 OR contact Genie Service for welding requirements.	
18A	73501GT	HALF MESH,8'PLATFORM,LH	1
18B	73500GT	HALF MESH,8'PLATFORM,RH***	
18C	54457GT	MESH,HALF,SWING GATE***	
19	1487GT	GATE LATCH CASTING--DRILLED	1
19-	63311GT	SNAP PIN	
20	56424GT	CLAMP,1.25X.5 RUBBER-CUSHION	14
21		Ref., FOAM PAD refer to 917.1	
22	85300GT	PIPE CRADLE ASSY. SERV (ONE)**	2
22-	72875GT	DECAL,WARNING,PIPE CRADLE,BOOM	
23	102786PGT	FORMING,LATCH,CTRL BOX LID PTD	
24	43392GT	BUMPER,BATTERY BOX & RAILS	
25	30468GT	LATCH,SLIDE, FLUSH MOUNT STYLE	

903.1 Air Line and Power to Platform, S-60

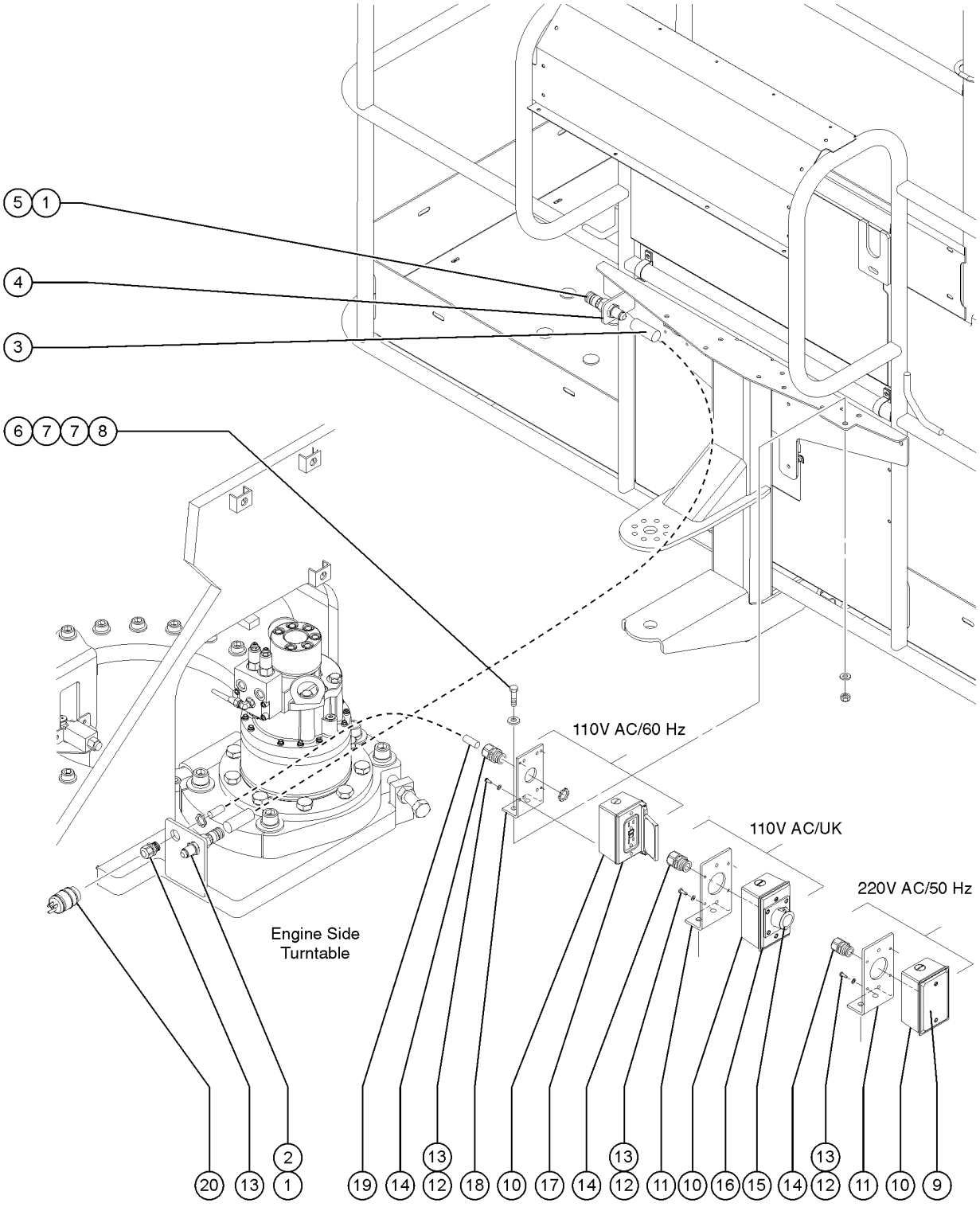

Item	Part No.	Description	Qty.
A-	T109331GT	ACC,AIRLINE TO PLAT,S60 ,SERV	
B-	119845GT	CLAMP, HYD WELD, AIR, OPT	1
1	49212GT	FEMALE BULKHEAD CONNECTOR-8	2
2	49214GT	MALE PIPE THD,1/4" SER,3/8"X18	
3A	49177-102894GT	HOSE ASSEMBLY,1/2"*** S-60	1
4	60886PGT	BRACKET,AIRLINE TO PLATFORM	1
5	49215GT	MPT,CPLR,1/4"SER,3/8"X18	
6	6019GT	SCREW,HHC,3/8-16 X 1.25 GRD 5	2
7	5397GT	WASHER, FLAT, USS, 5/16-18	4
8	4828GT	NUT, NYLOCK, 3/8-16	2
9	10777GT	COVER,BLANK	1
9-	81458GT	GASKET, UK POWER TO PLAT	
10	10775GT	T-BOX, 2.75 X 4.5 X 2.0**	1
11	81096GT	BRACKET,POWER TO PLAT, DOM	1
12	57075GT	SCREW, PHIL, 8-32 X .50, SELF TAP	4
13	35461GT	WASHER,FLAT,MS,#8,Y	4
14	7056GT	CONN,SQUEEZE,1/2NPT .38-.50,SM	2
14-	6935GT	CONN, SQZ, 1/2NPT, LOCKNUT	
15A	T112563GT	SVC KIT,UK RECEPT.REPLACEMENT to SN 43389	1
15A-	T112560GT	RECEPTACLE,UK,110V	
15A-	T112561GT	PLATE,UK,POWER TO PLAT	
15A-	63375GT	SCREW, FHM, 6-32 X .75 for 33629	2
15A-	74052GT	GASKET,COVER,GFCI,WEATHERPROOF	
15B	T112560GT	RECEPTACLE,UK,110V from SN 43390	1
16	T112561GT	PLATE,UK,POWER TO PLAT	1
17	13585GT	OUTLET, 110V	1
17-	74006GT	COVER,GFCI,HORIZONTAL,WEATHER	
18	81096GT	BRACKET,POWER TO PLAT, DOM	1

903.1 Air Line and Power to Platform, S-60

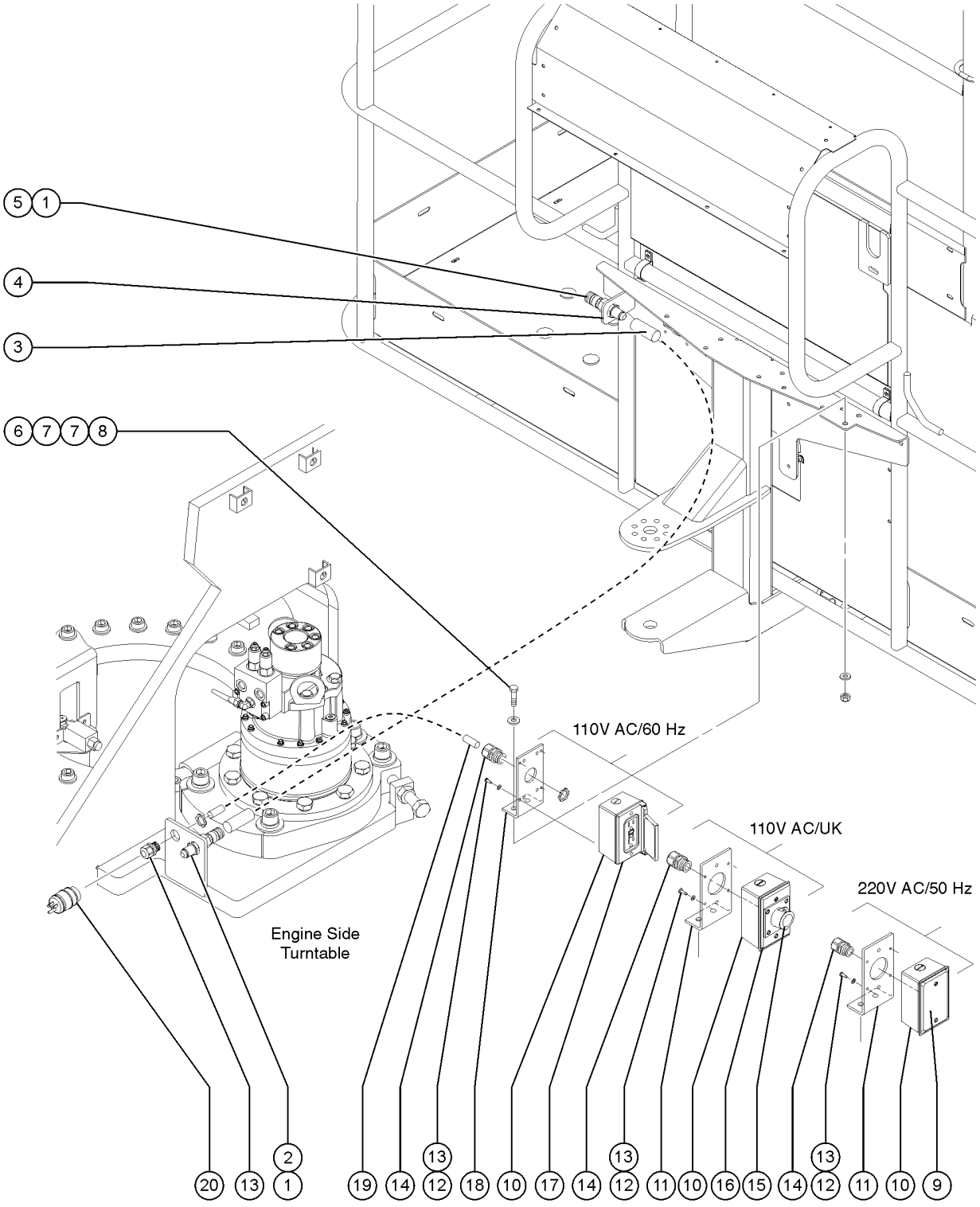

Item	*Part No.*	*Description*	*Qty.*
19		Ref: Harness, Power to Platform refer to section 307.1	1
20A	119403GT	CONN,PLUG 120 AC/15A DOMESTIC	1
20B	119404GT	CONN,RECEP 120AC/15A DOMESTIC	
20C	144161GT	PLUG,PWR,UK,16AMP,3PIN,BLK	
20D	25388GT	PLUG,FUSED,250V,13AMP,U.K.**	
20E	1280665GT	PLUG, TYPE F, 230A, 50HZ, 16A, IP44	

903.2 Air Line and Power to Platform, S-65

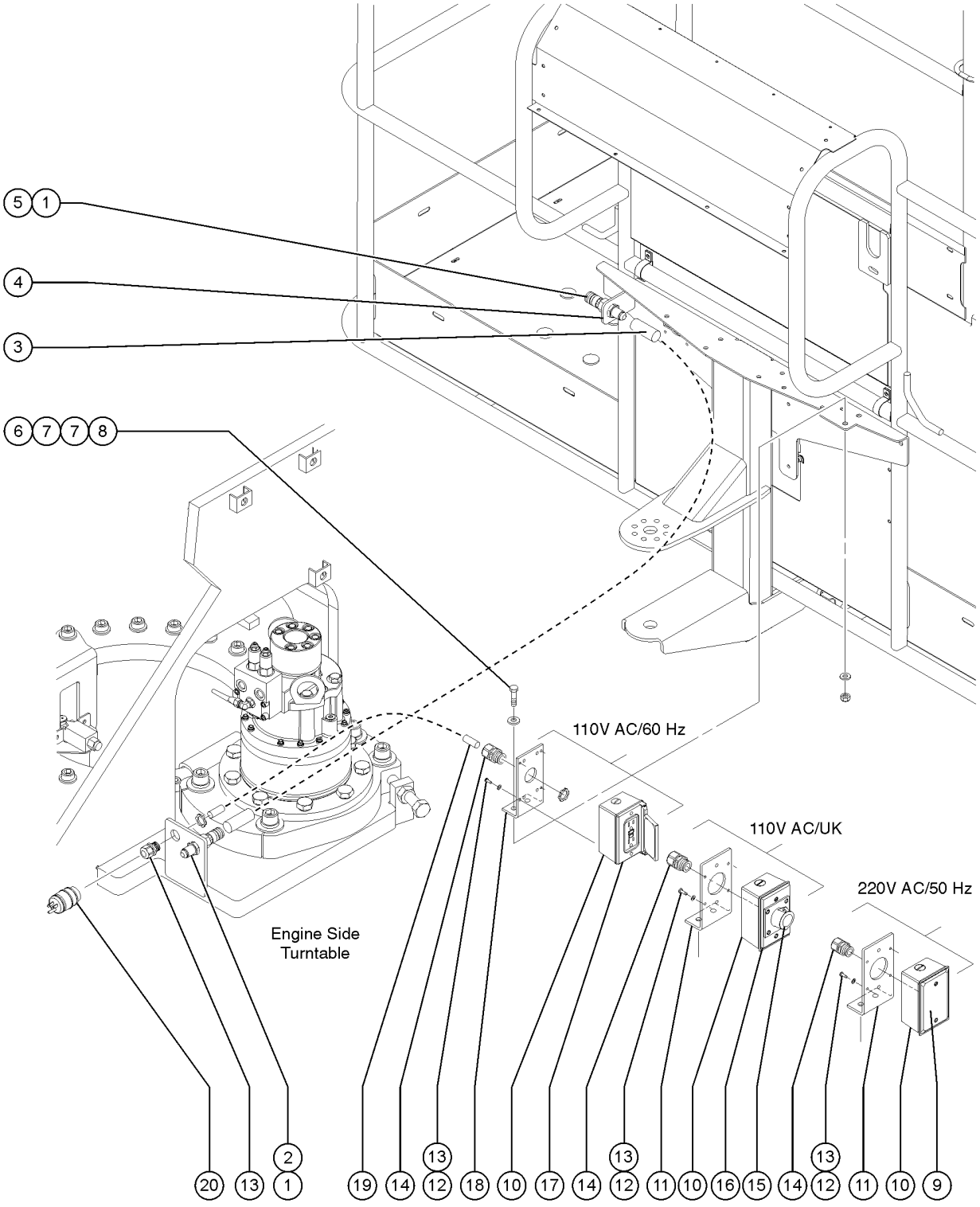

Item	Part No.	Description	Qty.
A-	T109331GT	ACC,AIRLINE TO PLAT,S60 ,SERV	
B-	119845GT	CLAMP, HYD WELD, AIR, OPT	1
1	49212GT	FEMALE BULKHEAD CONNECTOR-8	2
2	49214GT	MALE PIPE THD,1/4" SER,3/8"X18	
3B	49177-108894GT	HOSE ASSEMBLY,1/2"*** S-65	
4	60886PGT	BRACKET,AIRLINE TO PLATFORM	1
5	49215GT	MPT,CPLR,1/4"SER,3/8"X18	
6	6019GT	SCREW,HHC,3/8-16 X 1.25 GRD 5	2
7	5397GT	WASHER, FLAT, USS, 5/16-18	4
8	4828GT	NUT, NYLOCK, 3/8-16	2
9	10777GT	COVER,BLANK	1
9-	33724GT	KIT,GASKET,UK POWER TO PLAT	
9-	81458GT	GASKET, UK POWER TO PLAT	
10	10775GT	T-BOX, 2.75 X 4.5 X 2.0**	1
11	81570GT	BRACKET,POWER TO PLAT, UK	1
12	57075GT	SCREW, PHIL, 8-32 X .50, SELF TAP	4
13	35461GT	WASHER,FLAT,MS,#8,Y	4
14	7056GT	CONN,SQUEEZE,1/2NPT .38-.50,SM	2
14-	6935GT	CONN, SQZ, 1/2NPT, LOCKNUT	
15A	T112563GT	SVC KIT,UK RECEPT.REPLACEMENT to SN 43389	1
15A-	T112560GT	RECEPTACLE,UK,110V	
15A-	63375GT	SCREW, FHM, 6-32 X .75 for T112561	
15B	T112560GT	RECEPTACLE,UK,110V from SN 43390	1
16	T112561GT	PLATE,UK,POWER TO PLAT	1
17	13585GT	OUTLET, 110V	1
17-	74006GT	COVER,GFCI,HORIZONTAL,WEATHER	
18	81096GT	BRACKET,POWER TO PLAT, DOM	1
19		Ref: Harness, Power to Platform refer to section 307.1	

903.2 Air Line and Power to Platform, S-65

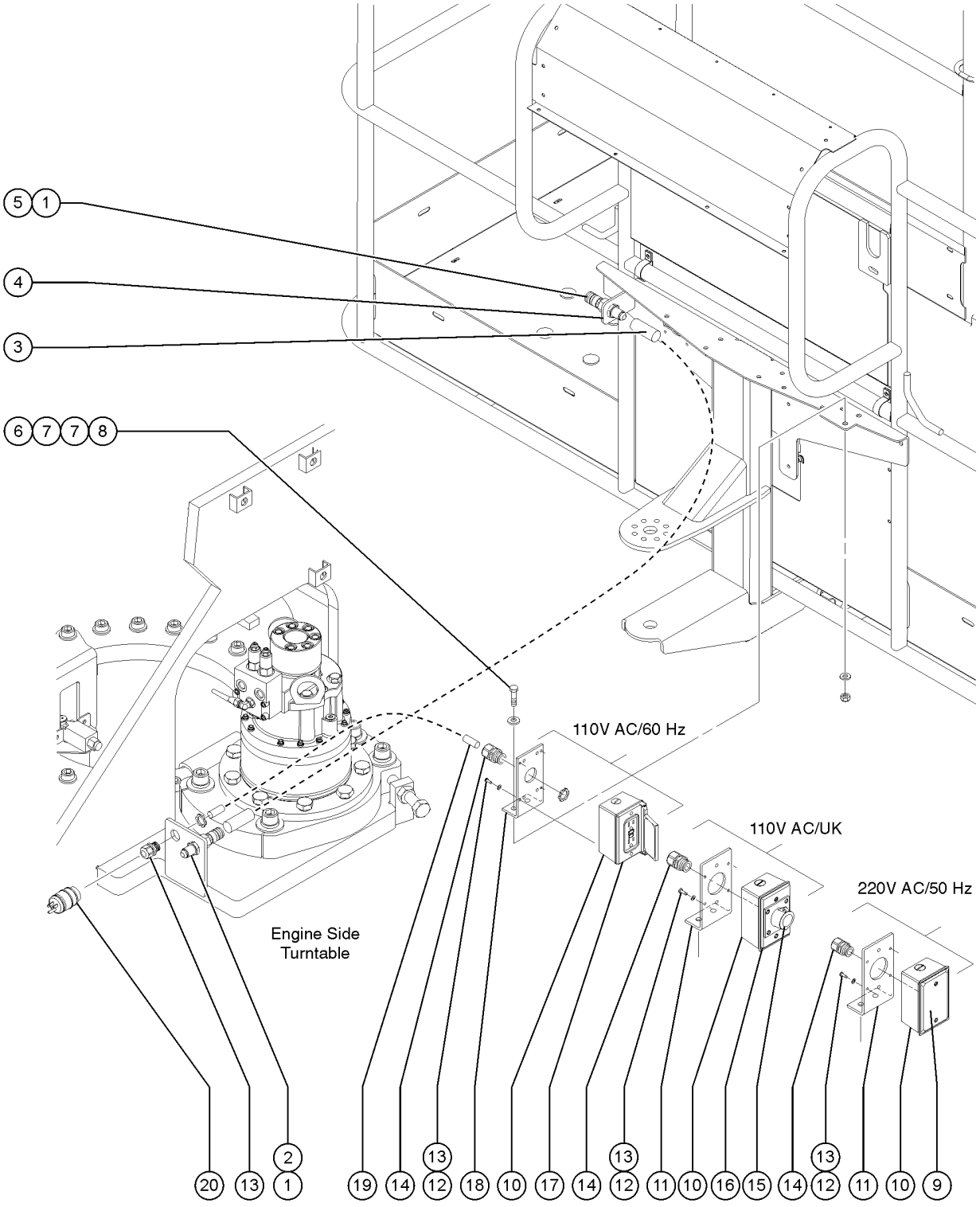

Item	*Part No.*	*Description*	*Qty.*
20A	119403GT	CONN,PLUG 120 AC/15A DOMESTIC	1
20B	119404GT	CONN,RECEP 120AC/15A DOMESTIC	
20C	144161GT	PLUG,PWR,UK,16AMP,3PIN,BLK	
20D	25388GT	PLUG,FUSED,250V,13AMP,U.K.**	
20E	1280665GT	PLUG, TYPE F, 230A, 50HZ, 16A, IP44	

904.1 Tri-Entry Platform Option

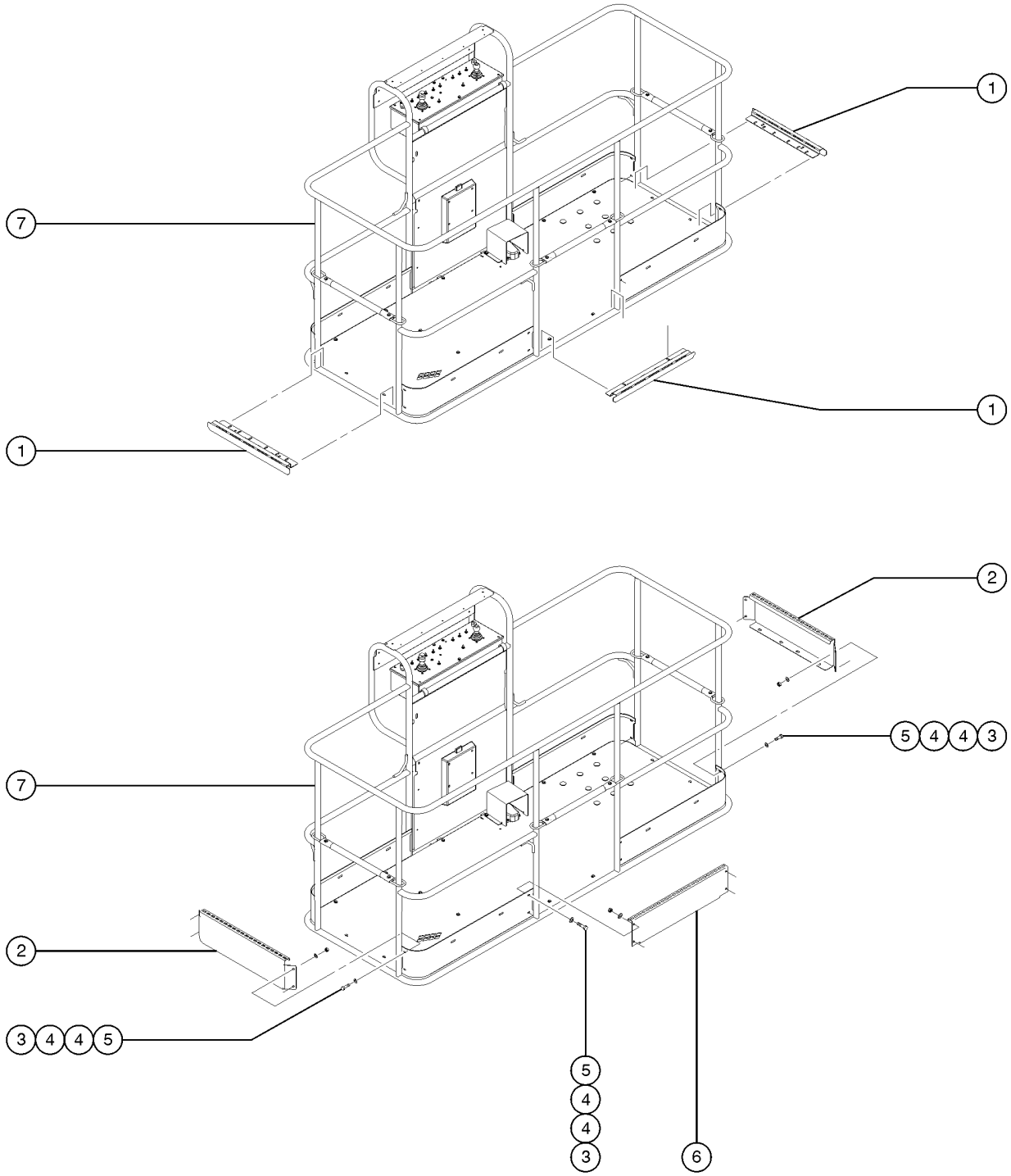

904.1 Tri-Entry Platform Option

Item	Part No.	Description	Qty.
A		Note: For half mesh components refer to 902.1	
1	73610PGT	STEP PLATFORM ENTRY PAINTED***	3
2A	139438GT	TOEBOARD, TRI ENTRY 6', EURO	2
2B	102721PGT	TOEBOARD,8'TRI ENTRY	
3	6090GT	SCREW, HHC, 1/4-20 X .75	
4	6638GT	WASHER, FLAT, USS, 1/4"Y	
5	6889GT	NUT,LP NYLOCK,1/4-20	
6	94745PGT	TOEBOARD,ENTRY EUROPEAN PNTD**	1
7A	215747GT	PLAT ASSY,TRI ENT,S60/65,6' decals not included, must order with platform decal kit, refer to section 100	1
7A-	101973GT	WELDMENT,6 FT TRI ENTRY PLAT decals not included, must order with platform decal kit, refer to section 100	
7B	215748GT	PLAT ASSY,TRI ENT,8' decals not included, must order with platform decal kit, refer to section 100	
7B-	94869GT	WELDMENT,8FT TRI ENTRY PLAT decals not included, must order with platform decal kit, refer to section 100	

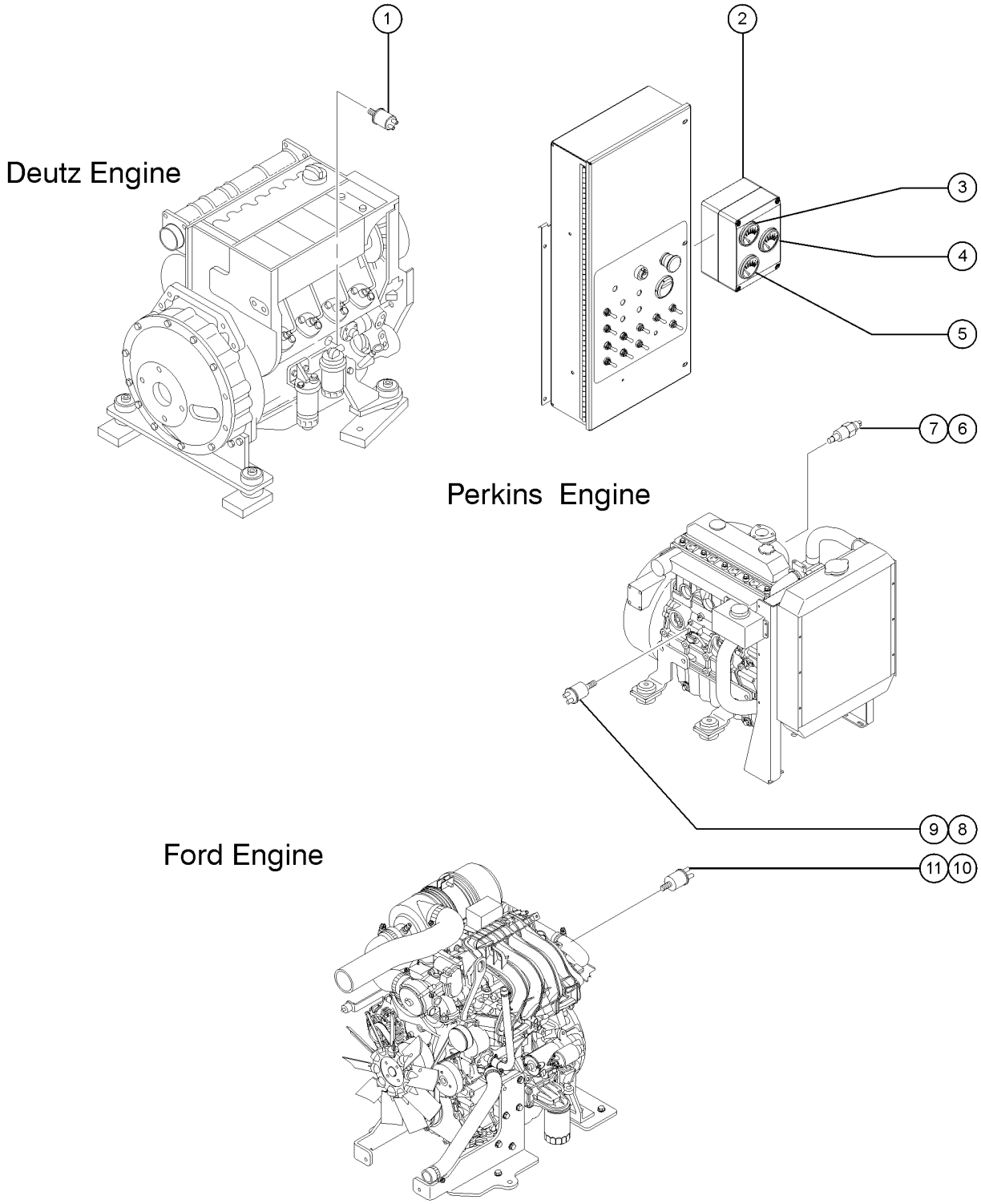
Deutz Engine
1
2
3
4
5
Perkins Engine
6
7
8
9
Ford Engine
10
11

905.1 Gauge Option

Item	Part No.	Description	Qty.
A	T109334GT	ACC,FULL GAUGE,FORD DSG423,SV	
B	T109333GT	ACC,FULL GAUGE,DEUTZ,SERV	
C	T109332GT	ACC,FULL GAUGE,PERKINS,SERV	
1	106033GT	ADAPTER,NPT 6-4	
2	101232GT	ENCLOSURE BOX,GAUGE OPT,DRILLD bracket not included	1
2-	139878GT	FORMING, GAUGE OPTION BRACKET not included with 101232, must order separately	1
3	53761-SGT	GAUGE,VOLTAGE	1
4	53758-SGT	GAUGE,OIL PRESSURE W/O SENDER	1
5	53759-SGT	GAUGE,WATER TEMP Perkins and Ford models only	1
6	34058GT	SENDING UNIT,TMP,FRD,GM,PRK704	1
7	28607GT	ADAPTER,140139-8-6	1
8	30810GT	SENDING UNIT,OIL PRESSURE*** dual-terminal sender	1
9	71038GT	ADAPTER, 1/8 X 1/4 F3H6-S	1
10	119418GT	ADAPTER,140130-4-4	1
11	119417GT	TEE,RUN,1/4" PIPE	1

906.1 Hydraulic Oil Cooler Option

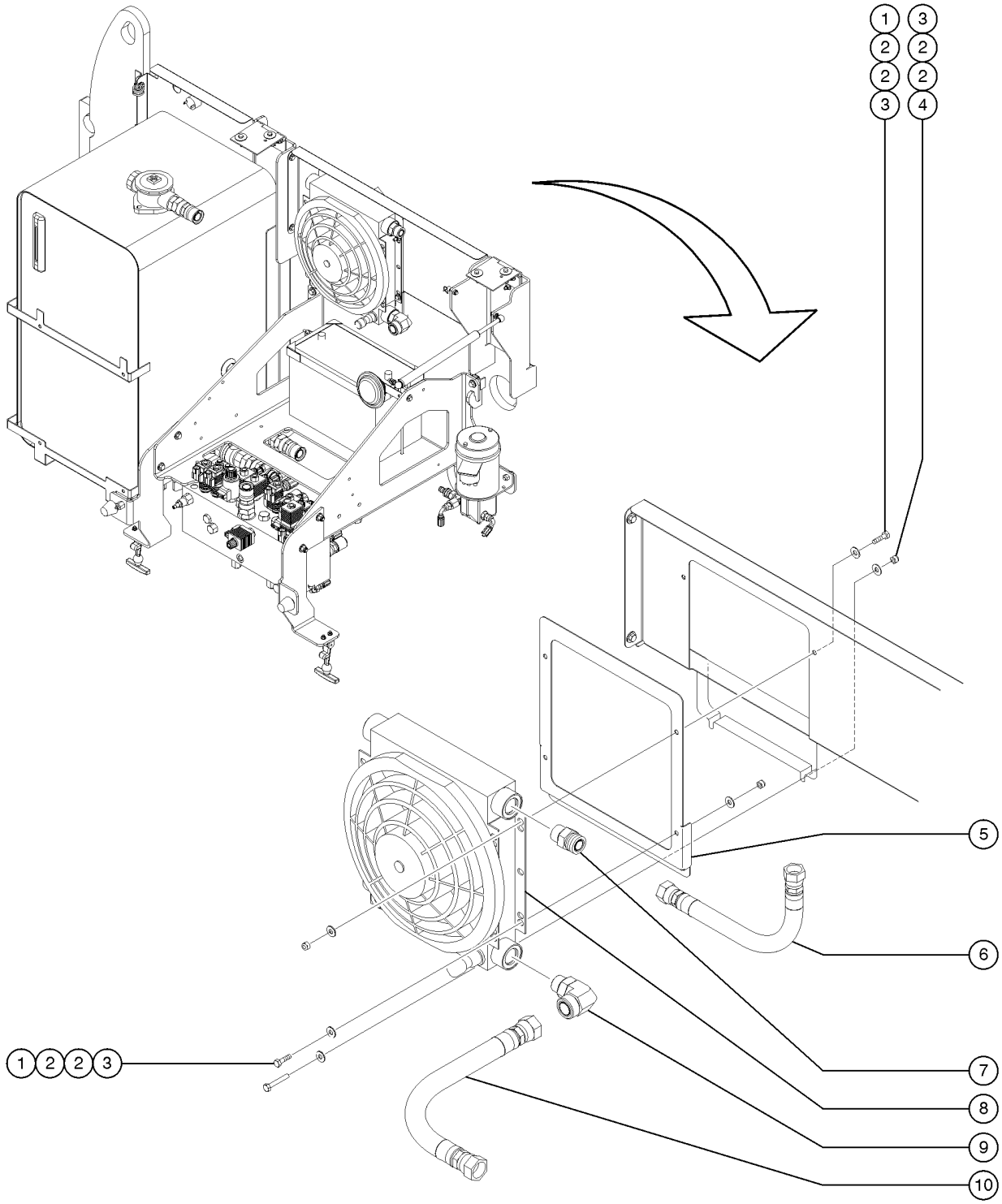

Item	Part No.	Description	Qty.
A	T109335GT	ACC, OIL COOLER,S60, SERV	
1	6888GT	SCREW, HHC, 1/4-20 X 1	4
2	6638GT	WASHER, FLAT, USS, 1/4"Y	12
3	6091GT	NUT,NYLOCK,1/4-20	6
4	6637GT	SCREW,HHC,1/4-20 X 1.75	2
5	77693GT	FORMING,OIL COOLER MOUNT	1
6	49150-2855GT	ASSY, HOSE, HYD, -12, 1750, STR, 90	1
7	48960GT	FITTING,CONN,520120-12***	1
8	71259GT	OIL COOLER W/FAN, 12VDC	1
9	48878GT	ELBOW,90D,520220-16-12	1
10	94205-3164GT	HOSE ASSY,3/4,45 FEM,STR MALE	1

907.1 Cold Start Package (to SN 23597)

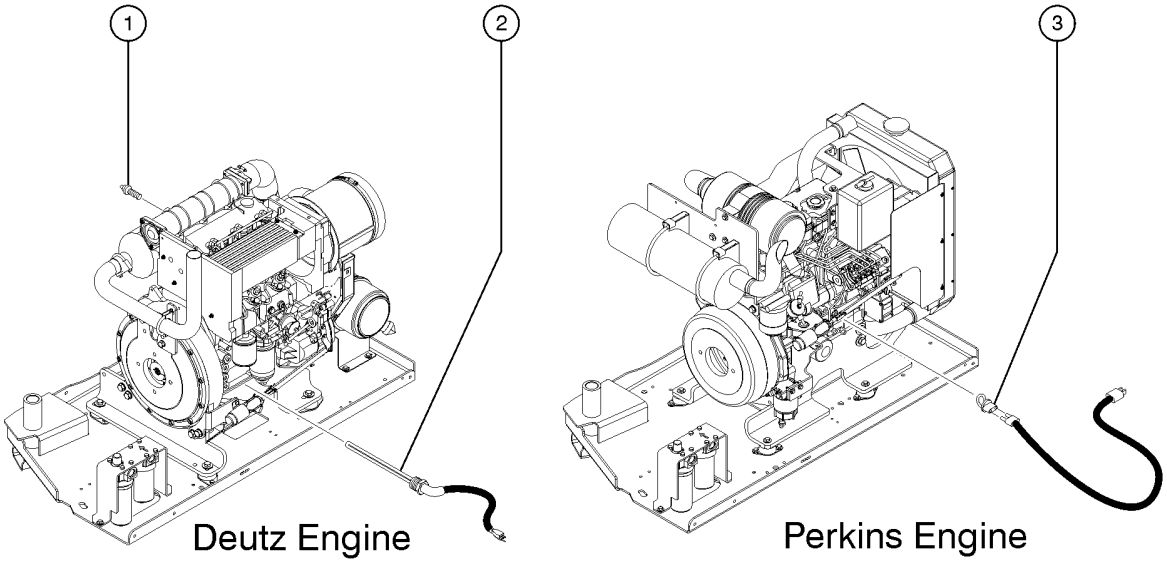

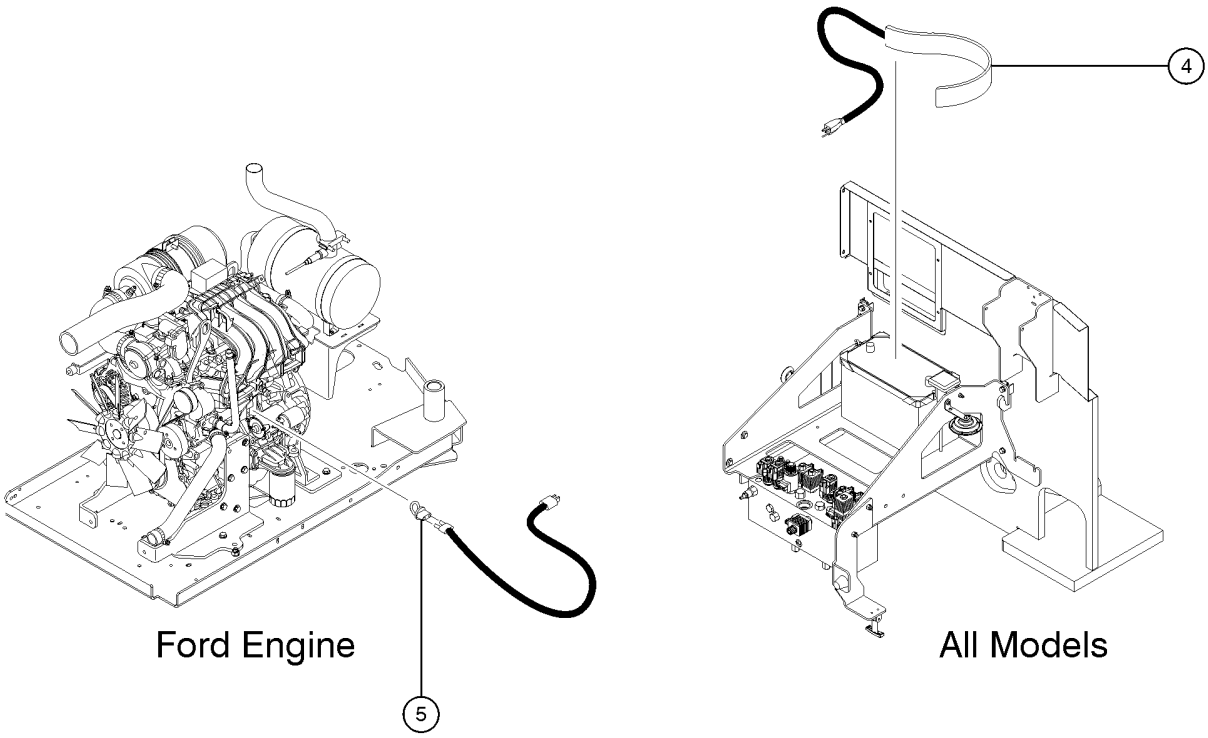

907.1 Cold Start Package (to SN 23597)

Item	Part No.	Description	Qty.
-	128146GT	OIL,ENG 5W-40 SYN*** ..... Deutz & Perkins Models	12 Quarts
1A	31408GT	GLOW PLUG,L1011	1
1B	128365GT	HARNESS,SECOND GLOW PLUG	1
1B-	61225GT	RELAY,12VDC,70AMP,SEALED ..... for 128365	
1B-	55747GT	FUSE HOLDER, IN-LINE, 6AWG, MAXI ..... for 128365	
2	128274GT	OIL PAN HEATER,DEUTZ,120V,150W ..... Deutz models	1
3	77382GT	HEATER,FREEZE PLUG,PRKINS40422 ..... Perkins models	1
4	28853GT	BLANKET,BATTERY ..... all models	1
5	119231GT	BLOCK HEATER,FORD DSG-423 ..... Ford models	1
5-	35610GT	HEATER,FREEZE PLUG,FORD LRG423 ..... Ford Models	1

907.2 Cold Start Package (from SN 23598)

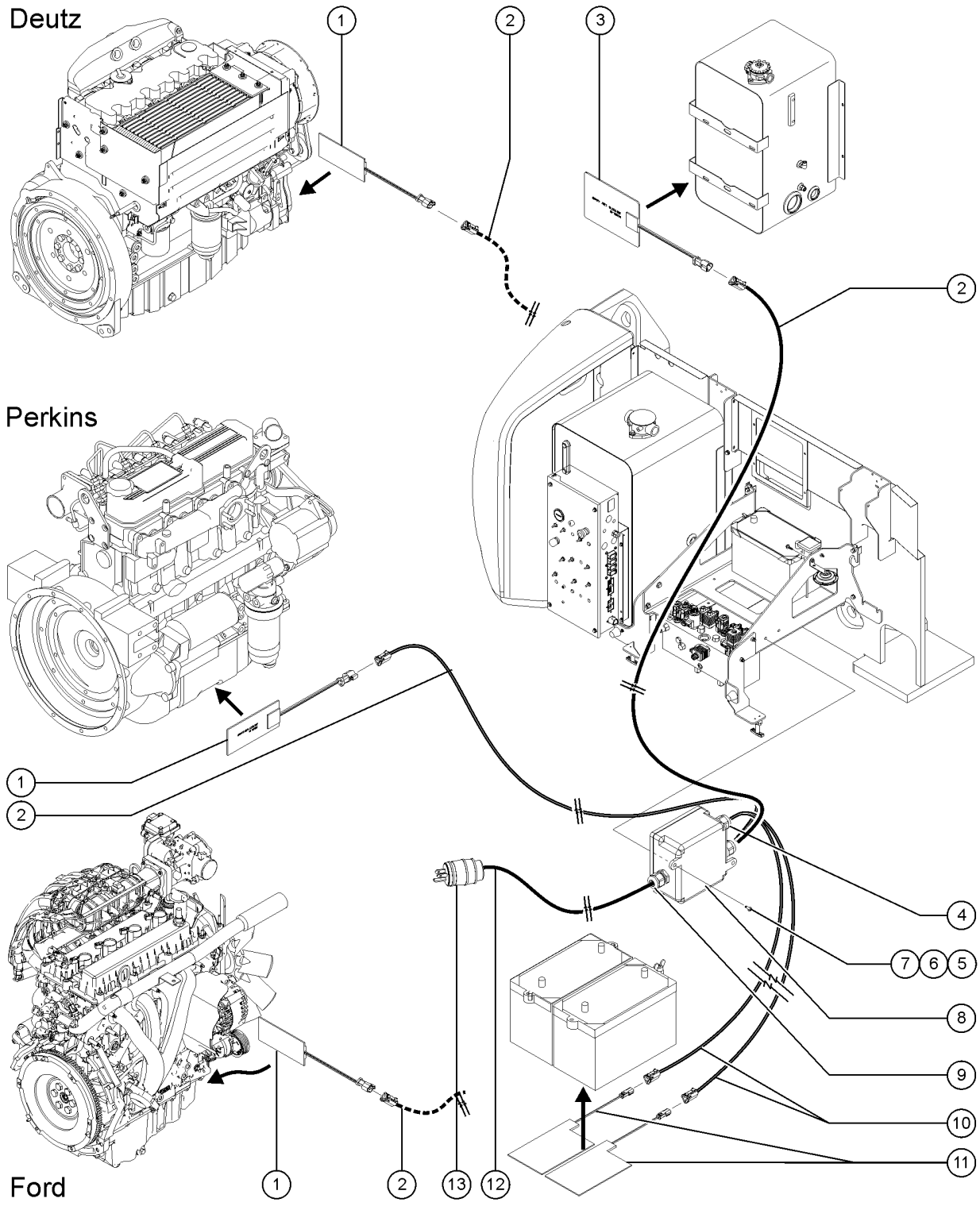

907.2 Cold Start Package (from SN 23598)

Item	Part No.	Description	Qty.
A-	1287846GT	ACCESSORY,COLD START PKG, 240V, DEUTZL04 (NOTE: use 5.8 qt 5W-40s synthetic engine oil)	
-	NOTE:GT	Plugs were added to the harnesses on SN 24976	
1	231015GT	HEATER, ADHESIVE, 2.1 AMP,120V 120v models (to SN 24975) (no plug)	1
1B	231014GT	HEATER, ADHESIVE, 1 AMP, 240V 240v models (to SN 24975) (no plug)	1
1C	216615GT	ASSY HEATER, MODEL 18, 120V 120v models (from SN 24976)	1
1C-	119066GT	CONN, RECEP, 3 WAY, DEUTSCH, DT, ENDCAP	
1C-	60441GT	CONN, RECEP, 3 WAY, DEUTSCH, DT, LOCK	
1D	216616GT	ASSY HEATER,MODEL 18,240V 240v models (from SN 24976)	1
1D-	119066GT	CONN, RECEP, 3 WAY, DEUTSCH, DT, ENDCAP	
1D-	60441GT	CONN, RECEP, 3 WAY, DEUTSCH, DT, LOCK	
2	216662GT	HARNESS,ENG/HYD HEATER,120V 120v models (from SN 24976)	1
2A-	119057GT	CONN, PLUG, 3 WAY, DEUTSCH, DT, ENDCAP	
2A-	60427GT	CONN, PLUG, 3 WAY, DEUTSCH, DT, LOCK	
2A-	101199-200GT	SHRINK TUBE,BLACK,RHW,1/2,3:1	
2B	216683GT	HARNESS,ENG/HYD HEATER,240V 240v models (from SN 24976)	1
2B-	119057GT	CONN, PLUG, 3 WAY, DEUTSCH, DT, ENDCAP	
2B-	60427GT	CONN, PLUG, 3 WAY, DEUTSCH, DT, LOCK	
2B-	101199-200GT	SHRINK TUBE,BLACK,RHW,1/2,3:1	
3	236475GT	HEATER, ADHESIVE, 4.6AMP, 120V 120v models (to SN 24975) (no plug)	1
3B	236474GT	HEATER, ADHESIVE, 2.3AMP, 240V 240v models (to SN 24975) (no plug)	1
3C	216612GT	ASSY,120V HEATER, HYD TANK 120v models (from SN 24976)	1
3C-	119066GT	CONN, RECEP, 3 WAY, DEUTSCH, DT, ENDCAP	
3C-	60441GT	CONN, RECEP, 3 WAY, DEUTSCH, DT, LOCK	
3D	216611GT	ASSY,240V HEATER, HYD TANK 240v models (from SN 24976)	1
3D-	119066GT	CONN, RECEP, 3 WAY, DEUTSCH, DT, ENDCAP	
3D-	60441GT	CONN, RECEP, 3 WAY, DEUTSCH, DT, LOCK	
4	99778GT	CABLE SQUEEZE CONN,4 WIRE included in harness	2
4-	238123GT	HUBBLE NUT, PG11	

907.2 Cold Start Package (from SN 23598)

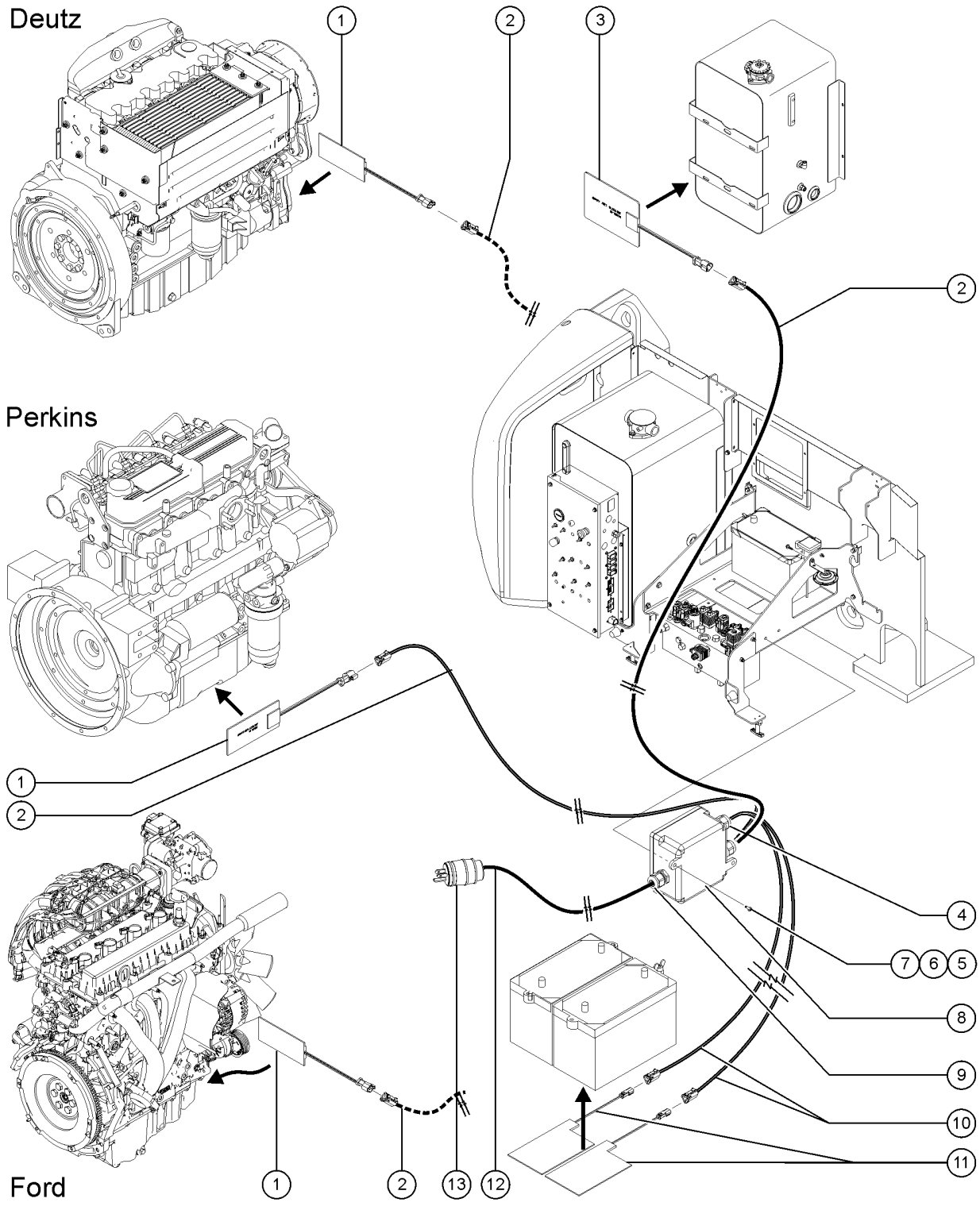

907.2 Cold Start Package (from SN 23598)

Item	Part No.	Description	Qty.
5	75041GT	SCREW,PHILLIPS,PHM,10-32 X 1	
6	6146GT	WASHER,FLAT,MS,#10,Y	
7	14392GT	NUT,LP NYLOCK,10-32	
8	214249GT	COLD WEATHER 120V J BOX ASSY	1
8-	215347GT	COLD PKG GROUND, JUMPER ASSY	1
8-	69776GT	TERMINAL,STRIP,4-POLE,600V***	1
8-	13597GT	TERMINAL,#10 RING,BLUE	4
9	214536GT	SQUEEZE CONN W/NUT, 2WIRE, 4MM included in harness	1
10	216655GT	HARNESS,BATT CABLE,120V 120v models (from SN 24976)	
10A-	119056GT	CONN, PLUG, 2 WAY, DEUTSCH, DT, ENDCAP	
10A-	60425GT	CONN, PLUG, 2 WAY, DEUTSCH, DT, LOCK	
10A-	101199-200GT	SHRINK TUBE,BLACK,RHW,1/2,3:1	
10B	216676GT	HARNESS,BATT CABLE,240V 240v models (from SN 24976)	
10B-	119056GT	CONN, PLUG, 2 WAY, DEUTSCH, DT, ENDCAP	
10B-	60425GT	CONN, PLUG, 2 WAY, DEUTSCH, DT, LOCK	
10B-	101199-200GT	SHRINK TUBE,BLACK,RHW,1/2,3:1	
11A	231013GT	HEATER,120V BATTERY 120v models (to SN 24975) (no plug)	
11B	231012GT	HEATER,240V,BATTERY 240v models (to SN 24975) (no plug)	
11C	216617GT	ASSY, BATTERY HEATER, 120V 120v models (from SN 24976)	
11C-	119065GT	CONN, RECEP, 2 WAY, DEUTSCH, DT	
11C-	60439GT	CONN, RECEP, 2 WAY, DEUTSCH, DT, LOCK	
11D	216618GT	ASSY BATTERY HEATER,240V 240v models (from SN 24976)	
11D-	119065GT	CONN, RECEP, 2 WAY, DEUTSCH, DT	
11D-	60439GT	CONN, RECEP, 2 WAY, DEUTSCH, DT, LOCK	
12A	214410GT	COLD PKG PIGGY TAIL, 120V ASSY 120v models (to SN 24975)	1
12B	214411GT	COLD PKG PIGGY TAIL, 240V ASSY 240v models (to SN 24975)	1
12C	216606GT	HARNESS, 120V POWER CORD, 24" 120v models (from SN 24976) includes plug and hubble	1
12C-	45845GT	TERMINAL, RING, #10 YELLOW	

907.2 Cold Start Package (from SN 23598)

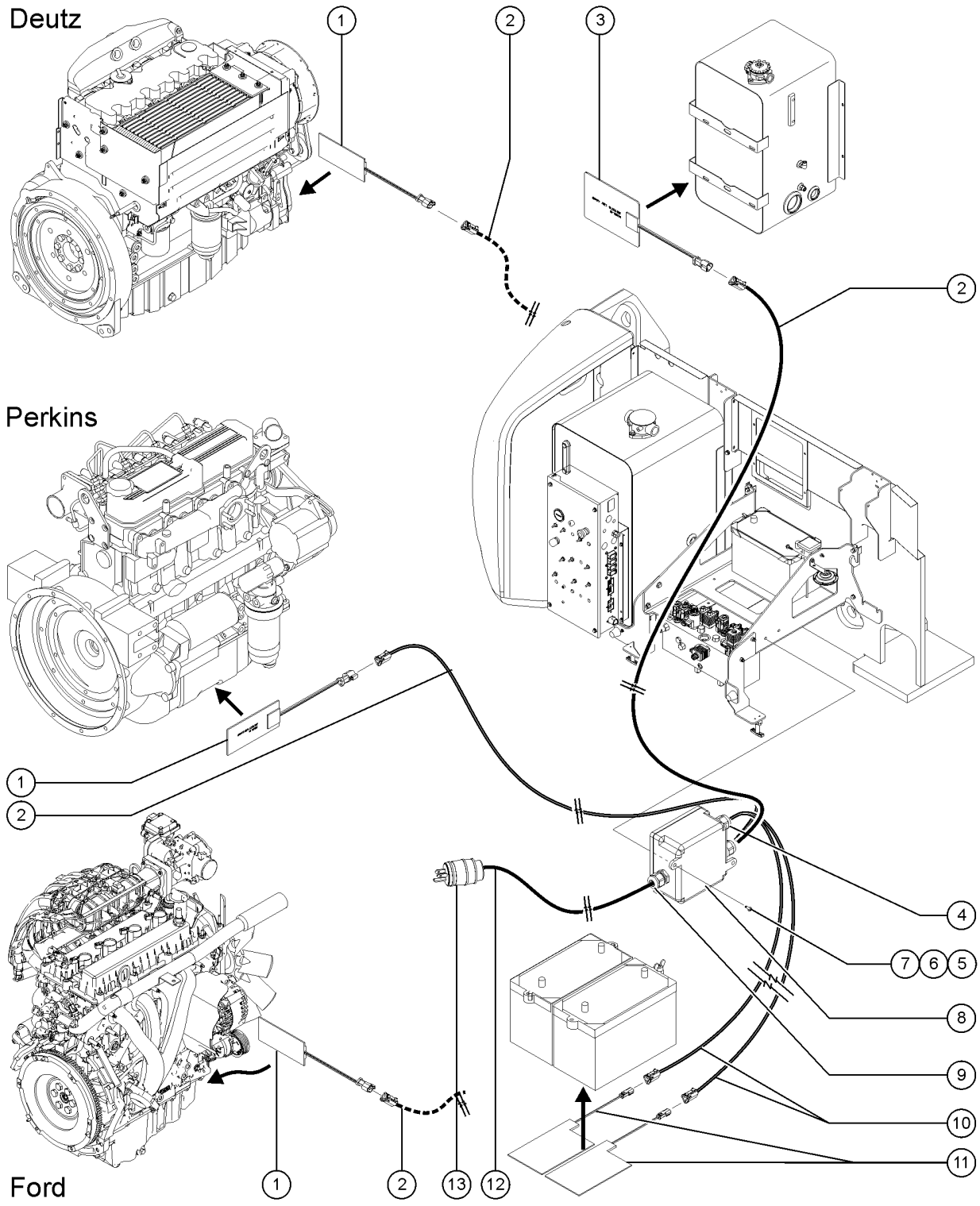

907.2 Cold Start Package (from SN 23598)

Item	*Part No.*	*Description*	*Qty.*
12C-	101199-200GT	SHRINK TUBE,BLACK,RHW,1/2,3:1	
12D	216607GT	HARNESS, 240V POWER CORD, 24" 240v models (from SN 24976) includes hubble	1
12D-	45845GT	TERMINAL, RING, #10 YELLOW	
12D-	101199-200GT	SHRINK TUBE,BLACK,RHW,1/2,3:1	
13	119403GT	CONN,PLUG 120 AC/15A DOMESTIC 120v models	1

908.1 Hostile Environment Package, Boom Wipers

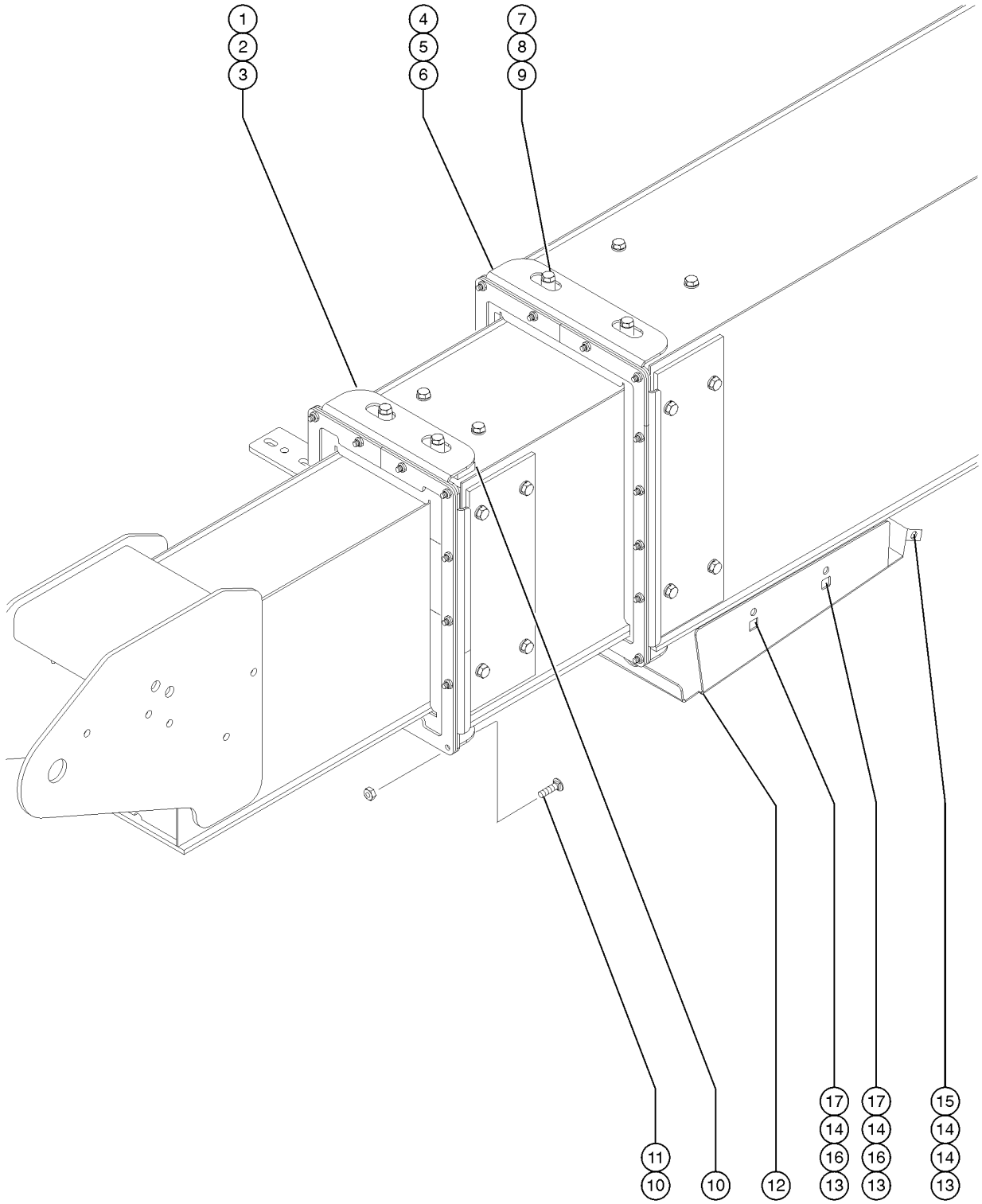

Item	Part No.	Description	Qty.
1	119087GT	FORMING BRKT, WIPER 2 TO 3	2
2	119089GT	WIPER RUBBER, 2 TO 3	1
3	119088GT	PLATE BACKING, WIPER 2 TO 3	2
4	119084GT	FORMING BRKT, WIPER 1 TO 2	2
5	119086GT	WIPER RUBBER, 1 TO 2	1
6	119085GT	PLATE BACKING, WIPER 1 TO 2	2
7	5224GT	SCREW,HHC,3/8-16 X 2	8
8	101932GT	TUBE, RD., STL., DOM .75 X .437 X .78	8
9	119090GT	SPACER, BOOM TOP	2
10	6878GT	BOLT,CARRIAGE,1/4-20 X .75,G2	
11	6889GT	NUT,LP NYLOCK,1/4-20	
12	147783GT	COVER,LIMIT SWITCH ASSY,S60	1
12A	6833GT	CLAMP,0.50,#8 X 1/4,RUB CUSH	3
13	6888GT	SCREW, HHC, 1/4-20 X 1	6
14	6638GT	WASHER, FLAT, USS, 1/4"Y	8
15	6091GT	NUT,NYLOCK,1/4-20	2
16	6356GT	WASHER, LOCK, .25	4
17	56912GT	SPRING CLIP,1/4-20,.025-.15X.54,ZAG	4

909.1 Hostile Environment Package, Turntable Components

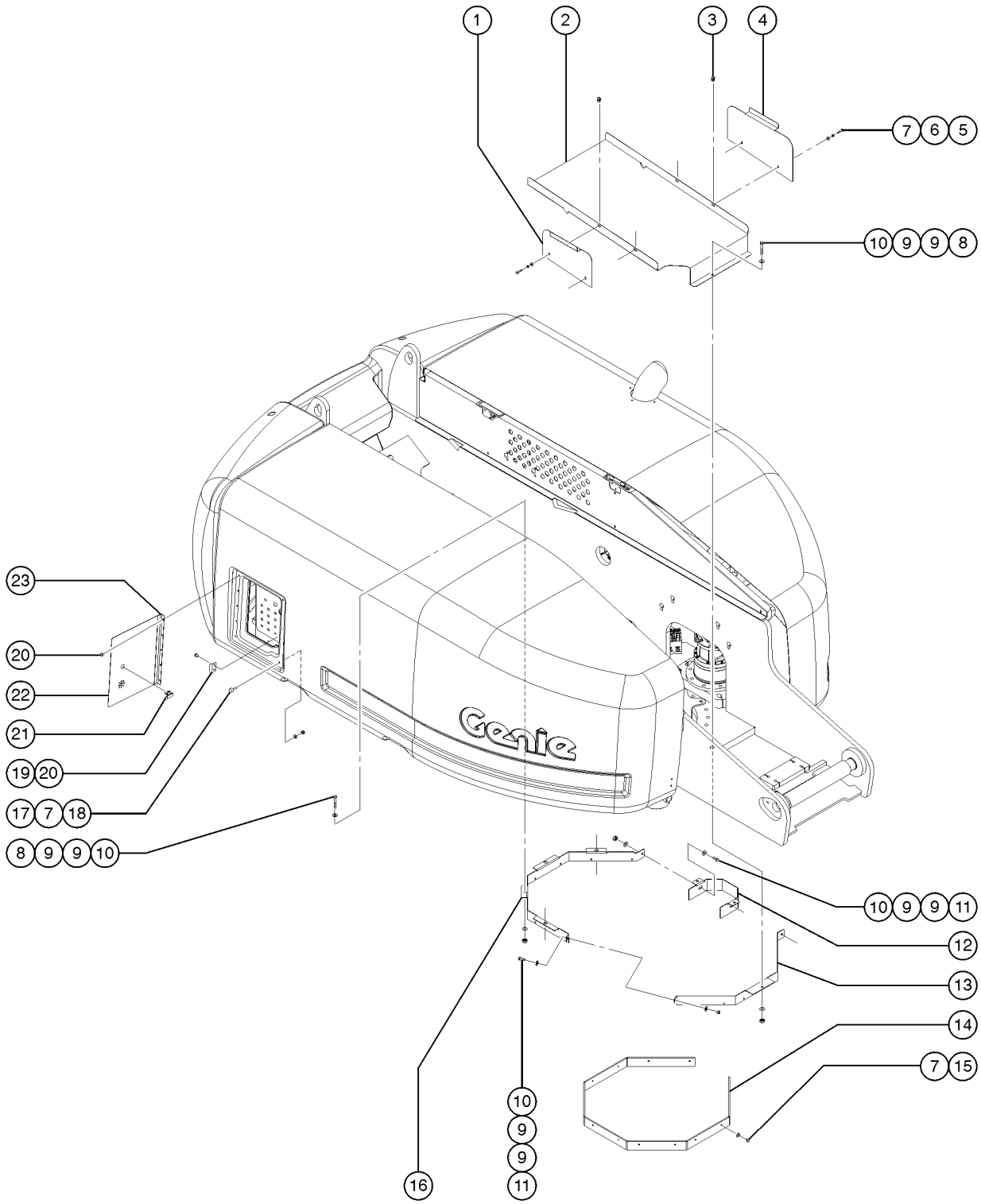

909.1 Hostile Environment Package, Turntable Components

Item	Part No.	Description	Qty.
1	77997PGT	FORMING,TT LH SIDE COVER PAINT	1
2	77996PGT	TURNTABLE CENTER COVER PAINTED	1
3	56912GT	SPRING CLIP,1/4-20,.025-.15X.54,ZAG	4
4	77998PGT	FORMING,TT RH SIDE COVER PAINT	1
5	8915GT	SCREW, HHC, 1/4-20 X 1.25	
6	6356GT	WASHER, LOCK, .25	
7	6638GT	WASHER, FLAT, USS, 1/4"Y	
8	8178GT	SCREW, HHC, 3/8-16 X 2.5	
9	6097GT	WASHER, FLAT, USS, 3/8", Y	
10	4828GT	NUT, NYLOCK, 3/8-16	
11	6175GT	SCREW,HHC,3/8-16 X 1	
12	77879PGT	FORMING,PINION GUARD PAINTED	1
13	70318PGT	FORMING,WIPER GUARD RT models with Deluxe Hostile Option	1
14	70319GT	WIPER,RING GEAR GUARD models with Deluxe Hostile Option	1
15	81167GT	RIVET,ALUM,P,.25X.625	14
16	70317PGT	FORMING,WIPER GUARD LT models with Deluxe Hostile Option	1
17	36388GT	BUMPER,RUBBER,.75 X .50H,STUD	2
18	6889GT	NUT,LP NYLOCK,1/4-20	
19	63772GT	CATCH,GRND.CTRL.BOX COVER	1
20	53189GT	RIVET,ALUM,ALUM,P,.25X.375	12
21	63773GT	LATCH,GRND.CTRL.BOX COVER	1
22	147644GT	COVER,GRND.CTRL.BOX,PAINTED	1
23	121831GT	HINGE,GROUND BOX COVER	1

910.1 Hostile Environment Package, Cylinder Bellows and Cable Track Protection

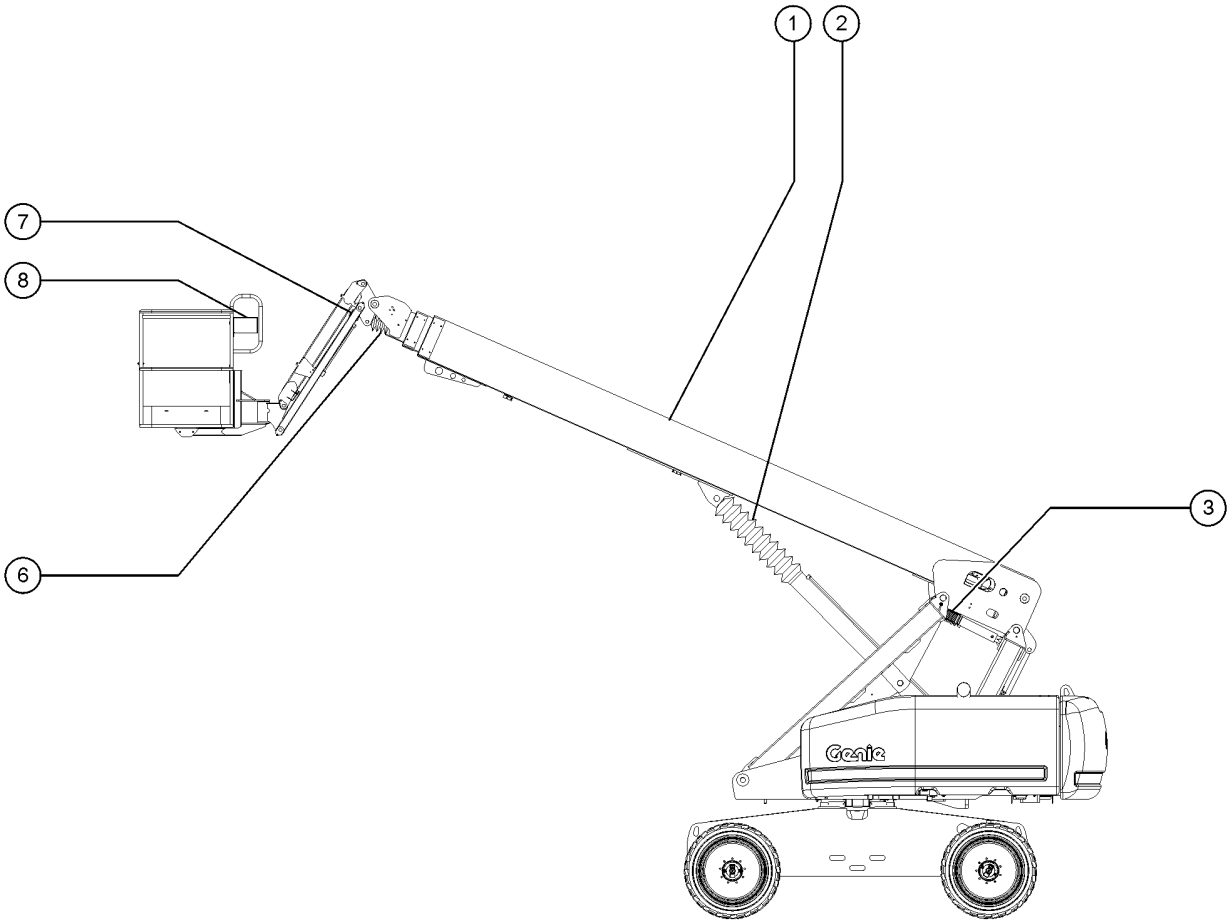

Typical Bellows Installation

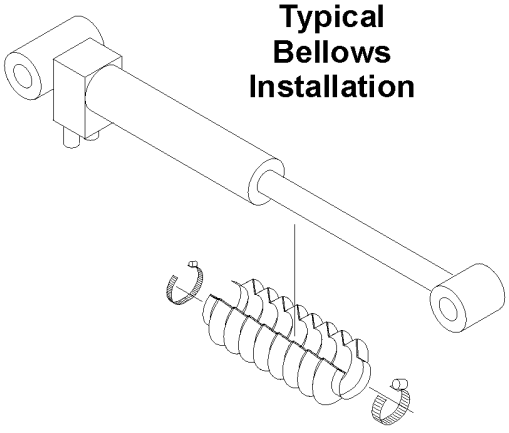

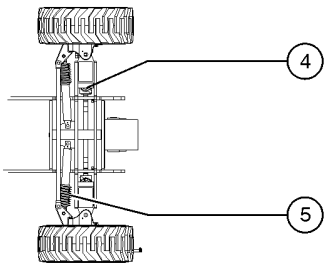

Item	Part No.	Description	Qty.
1	106099GT	COVER,CABLE TRACK (not shown) models with Deluxe Hostile Option	1
1	6888GT	SCREW, HHC, 1/4-20 X 1	4
1	6638GT	WASHER, FLAT, USS, 1/4"Y	8
1	6091GT	NUT,NYLOCK,1/4-20	4
2	94479GT	BELLOWS,CYLINDER LIFT	1
2-	35432GT	CLAMP,HOSE,6.50	
2-	34955GT	CLAMP, HOSE, 5.00	
3	94463GT	BELLOWS,MASTER CYLINDER	1
3-	34955GT	CLAMP, HOSE, 5.00	
3-	22672GT	CLAMP,HOSE,1.75	
4	63727GT	COVER, PROTECTIVE, OSCILLATE Oscillate Only	2
4-	34955GT	CLAMP, HOSE, 5.00 Oscillate Only	
4-	22672GT	CLAMP,HOSE,1.75 Oscillate Only	
5	34922GT	COVER,PROTECTIVE,STEERING	2
5-	34955GT	CLAMP, HOSE, 5.00	
5-	22672GT	CLAMP,HOSE,1.75	
6	94537GT	BELLOWS,CYLINDER,PLAT LEVEL	1
6-	22672GT	CLAMP,HOSE,1.75	
6-	94533GT	PLATE,BACKING BELLOWS	
6-	49824GT	SCREW,PHILLIPS,FHM,10-32X1.00	
6-	6146GT	WASHER,FLAT,MS,#10,Y	
6-	23405GT	NUTSERT,10-32 STEEL CAD PLTD	
7	34505GT	COVER,PROTECTIVE,JIB CYLINDER S-65 Only	1
7-	30971GT	CLAMP,HOSE,3.00" S-65 Only	
7-	36208GT	CLAMP,HOSE,1.25*** S-65 Only	
8	T107895GT	DECAL,PROTECTOR,CLEAR	1

911.1 Hostile Environment Package, Engine Air Pre-Cleaners

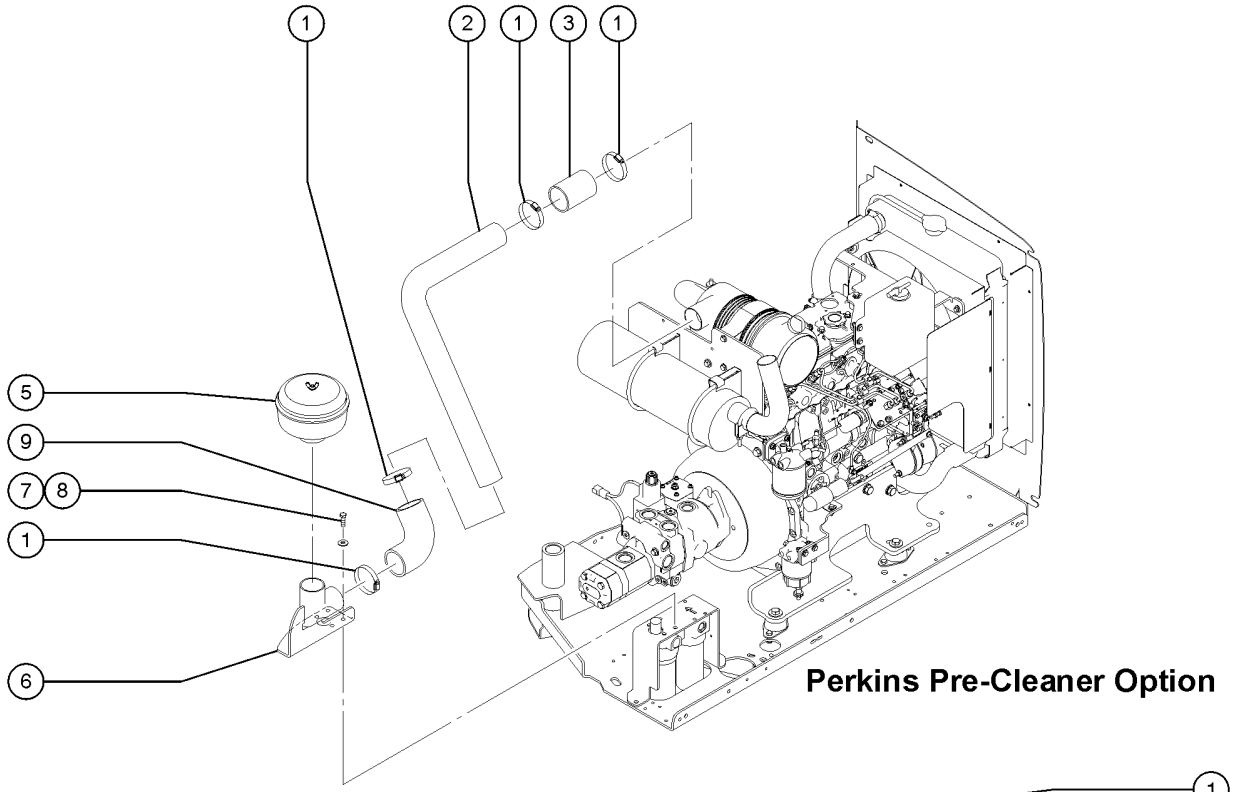

Perkins Pre-Cleaner Option

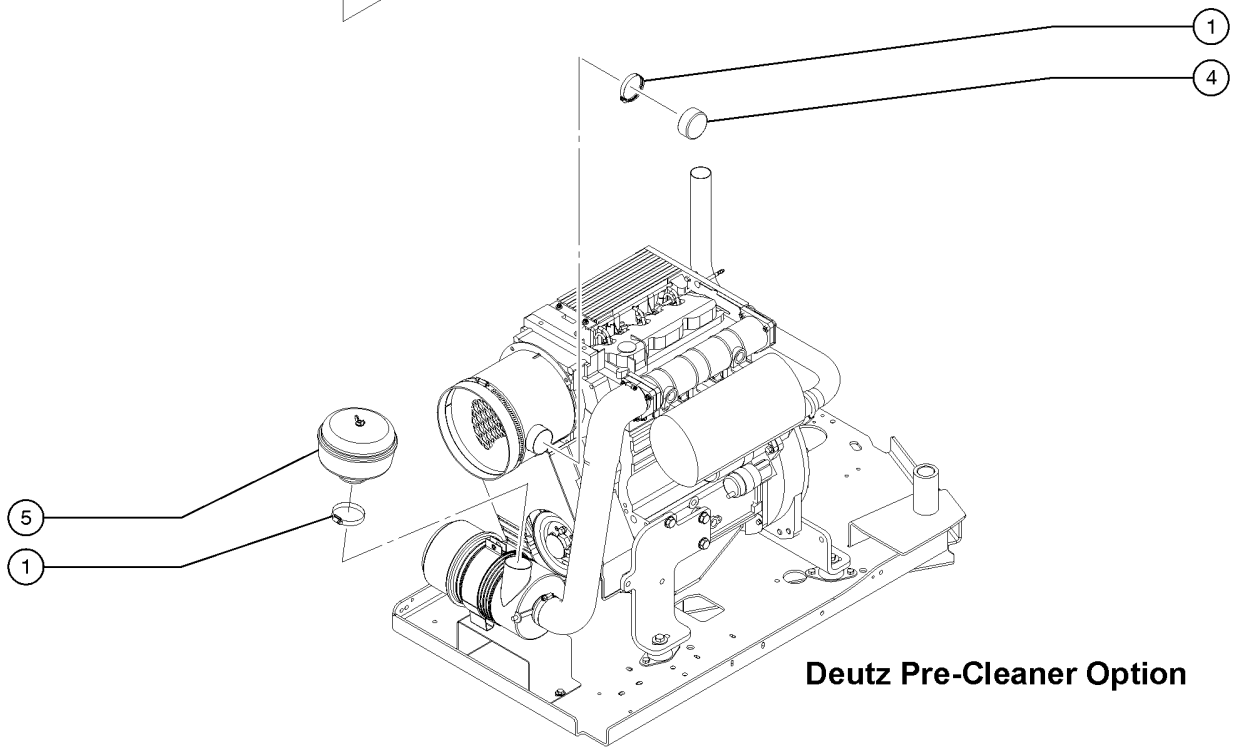

Deutz Pre-Cleaner Option

911.1 Hostile Environment Package, Engine Air Pre-Cleaners

Item	Part No.	Description	Qty.
A	T109339GT	ACC,AIR PRE-CLEANER,DEUTZ	
B	T109340GT	ACC,AIR PRE-CLEANER,PERKINS T2	
1	45435GT	CLAMP,HOSE,2.50" Deutz and Perkins Models	4
2	77891GT	TUBE,AIR INTAKE	1
3	34162-0400GT	HOSE,AIR INTAKE 2.5" I.D.	1
4	70529GT	CAP,PLASTIC,2.5 ID	1
5	34959GT	PRECLEANER,AIR INTAKE***	1
6	77887GT	WELDMENT,PRECLEANER BRACKET	1
7	6019GT	SCREW,HHC,3/8-16 X 1.25 GRD 5	
8	6097GT	WASHER, FLAT, USS, 3/8", Y	
9	34164GT	ELBOW,90 DEGR,RUBBER,2.5"I.D.*	1

912.1 Welder Option - Chassis Components (to SN S-6013-26173)

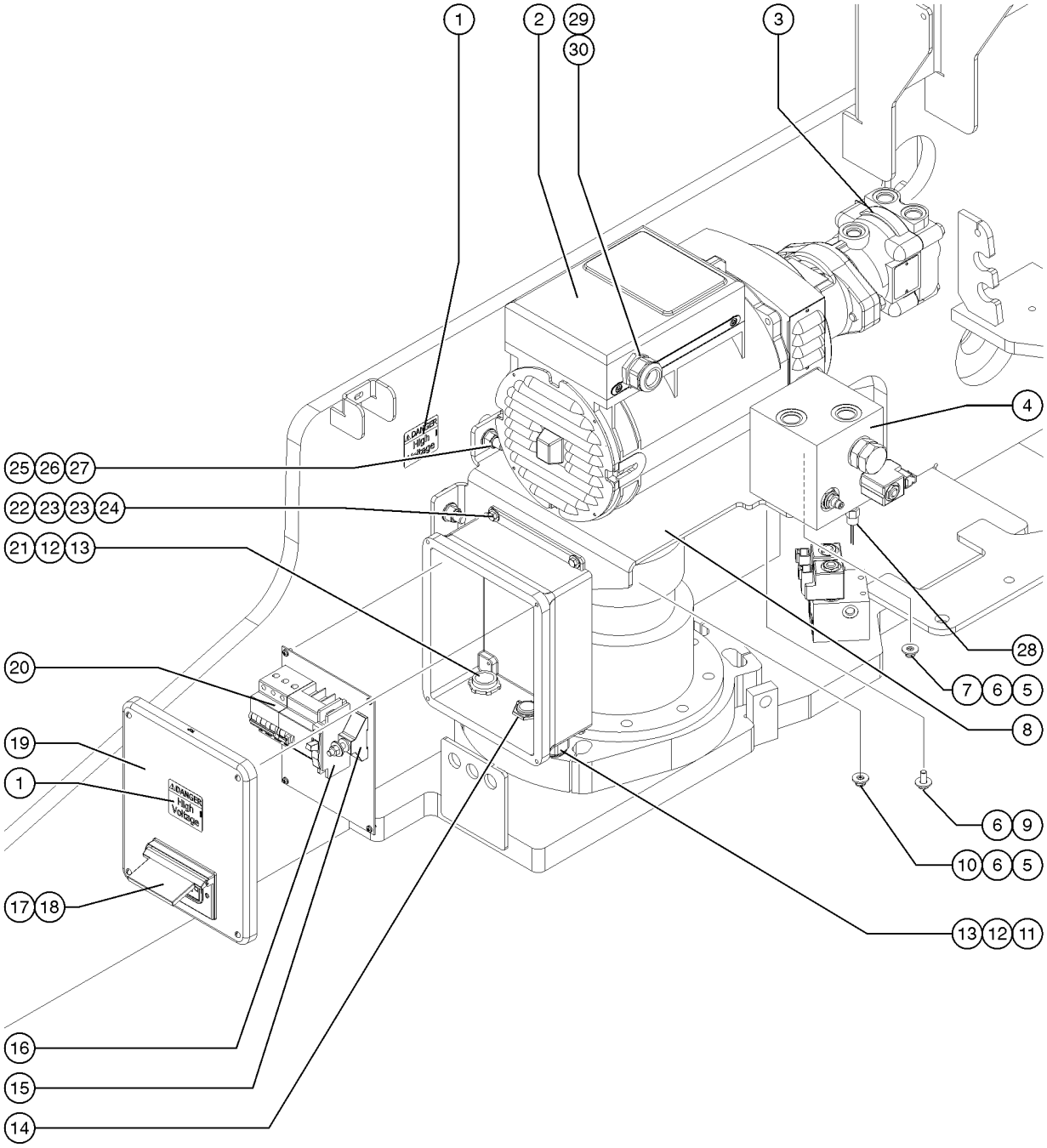

912.1 Welder Option - Chassis Components (to SN S-6013-26173)

Item	Part No.	Description	Qty.
A	119846GT	CLAMP, WELD LEADS, AIR, OPT	1
A-	106520GT	GROUNDING CABLE ASSEMBLY,18"	1
B	128050GT	CLAMP, HYD, WELD, AIR, OPT	1
C	106520GT	GROUNDING CABLE ASSEMBLY,18"	1
D	1276694GT	KIT, RETROFIT, WELDGEN, MAG BREAKER S-60, S-65 from SN S6004-9708	
E	1276694GT	KIT, RETROFIT, WELDGEN, MAG BREAKER S-60X from SN S60X10-21002	
F	1276694GT	KIT, RETROFIT, WELDGEN, MAG BREAKER S-60XC from SN S60XC10-21099	
G	1276694GT	KIT, RETROFIT, WELDGEN, MAG BREAKER S-60 TraX from SN S60TX08-17768	
H	1276694GT	KIT, RETROFIT, WELDGEN, MAG BREAKER S-65 TraX from SN S65TX10-20410	
1	82237GT	DECAL,DANGER,HIGH VOLTAGE	2
2A	139367GT	GENERATOR,HYDRA,25CC,208V*** Harrison Generator; includes item 3; Consult Factory prior to ordering	1
2A-	1273323GT	ALTERNATOR for 139367	
2A-	58631GT	COUPLER,INSERT for 139367	
2A-	139919GT	FITTING,ORIFICE,.047 for 139367	
2B	106113GT	GENERATOR,HYDRO-12KEP-21-3 Fabco Generator; includes item 2; Consult Factory prior to ordering	
2B-	T113655GT	COUPLING, 28MM (106113) for 106113	
2B-	T114022GT	SPIDER (106113) for 106113	
2B-	T114023GT	COUPLING (106113) for 106113	
3	33432GT	MOTOR,HYD,25CC FIXED*** Sauer Motor for Harrison Generator; Consult Factory	1
3-	32675GT	SEAL KIT,SUNSTRAND for 33432	
3-	147418GT	ASSY,BLEED LINE (139367) for 139367	
3-	106184GT	MOTOR,HYD 12.5KW GEN,21CC*** Fabco Motor; Consult Factory	
3-	162006GT	SEAL KIT,HYD MOTOR(106184) for 106184	
4	101516GT	MANIFOLD,DRIVE OIL DIVERTER	1
4-	94757GT	VALVE,CHECK,3 PSI***	
4-	94760GT	VALVE,SOLENOID,10V,W/OUT COIL*	
4-	128419GT	SEAL KIT	
4-	94765GT	COIL-10V DC***	

912.1 Welder Option - Chassis Components (to SN S-6013-26173)

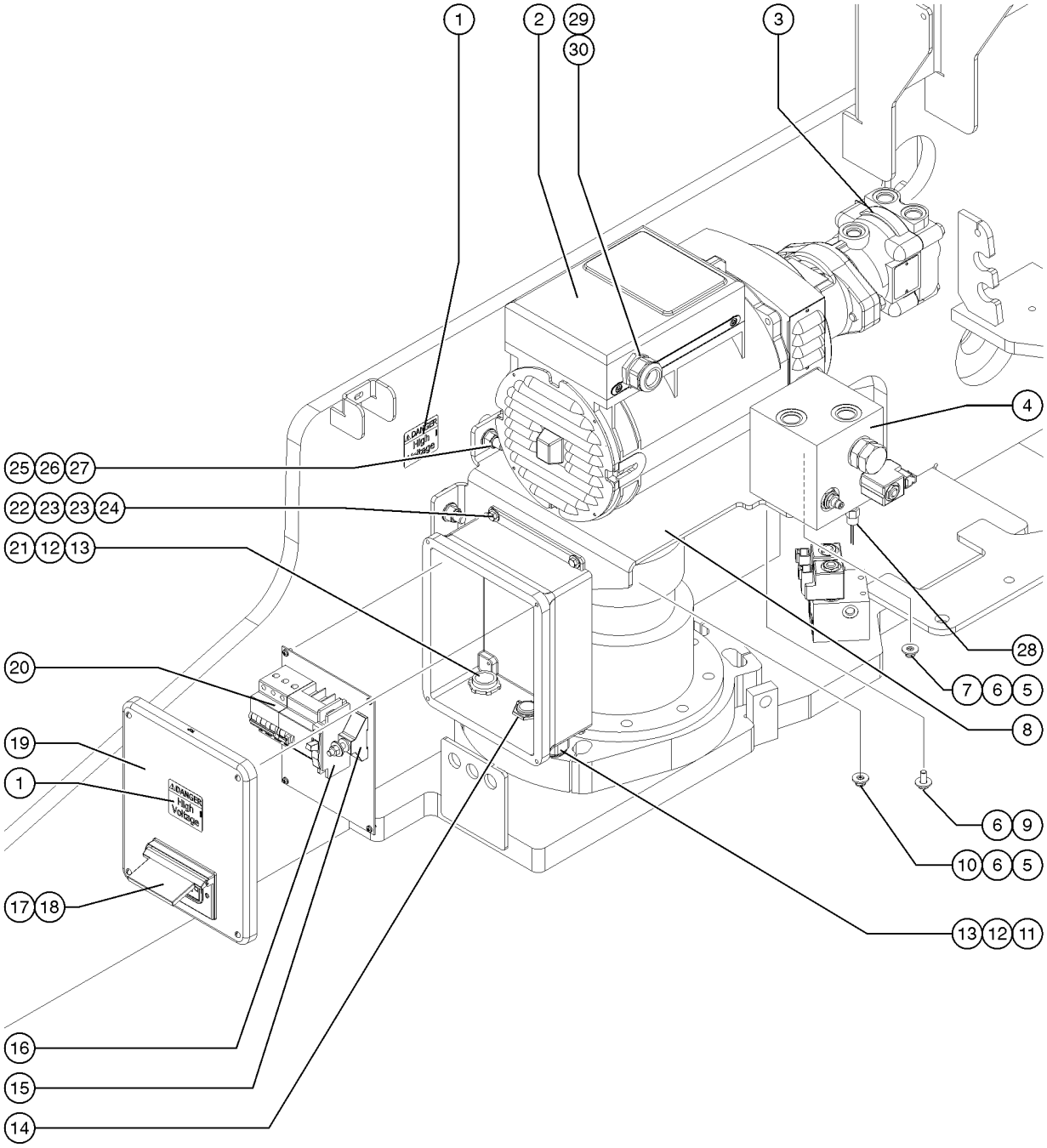

912.1 Welder Option - Chassis Components (to SN S-6013-26173)

Item	Part No.	Description	Qty.
4-	94759GT	NUT,SOLENOID	
4-	122302GT	RELIEF,VALVE 270 PSI	
4-	128416GT	SEAL KIT	
4-	102746GT	VALVE,PILOT OPER DIRECTIONAL	
4-	106394GT	ORIFICE DISC,.030,CONE	
4-	146284GT	SWITCH,PRESS,#4NPT,200PSIF	
4-	146285GT	CONN, SAE#4-1/4" NPT for 146284	
4-	94765GT	COIL-10V DC***	
5	6037GT	NUT,HEX,5/16-18,GR5	
6	5397GT	WASHER, FLAT, USS, 5/16-18	
7	13000GT	SCREW,HHC,5/16-18 X 1.25	
8	106114GT	BRACKET,GENERATOR12.5 KW,PNTD*	1
9	10107GT	SCREW,HHC,5/16-18 X .75	
10	13002GT	SCREW,HHC,5/16-18 X 1 GR5	
11	20776GT	CABLE SQUEEZE CONN	1
12	18665GT	LOCKNUT,ELECTRIC,1" NPT	2
13	106104GT	O-RING,SEAL RING,1" NPT (PKG)	1
14	106495GT	PLUG,1/2" HUBBLE	1
15	106108GT	TERMINAL,STUD BOLT,250 V	1
15-	6037GT	NUT,HEX,5/16-18,GR5	
15-	5397GT	WASHER, FLAT, USS, 5/16-18	
16	106073GT	CIRCUIT BREAKER,20A,SINGLE PH	1
17	74006GT	COVER,GFCI,HORIZONTAL,WEATHER	1
18	80543GT	RECEPTACLE, 120VAC, 20A, GFCI	1
19A	101947GT	J-BOX ASSEMBLY,8X10 to SN 22404	1
19B	227532GT	J-BOX ASSEMBLY,8X10 from SN 22405	
20A	106477GT	GFI/CIRCUIT BREAKER ASSEMBLY to SN 22404	1
20A-	106374GT	CIRCUIT BREAKER,50A,3P for 106477	

912.1 Welder Option - Chassis Components (to SN S-6013-26173)

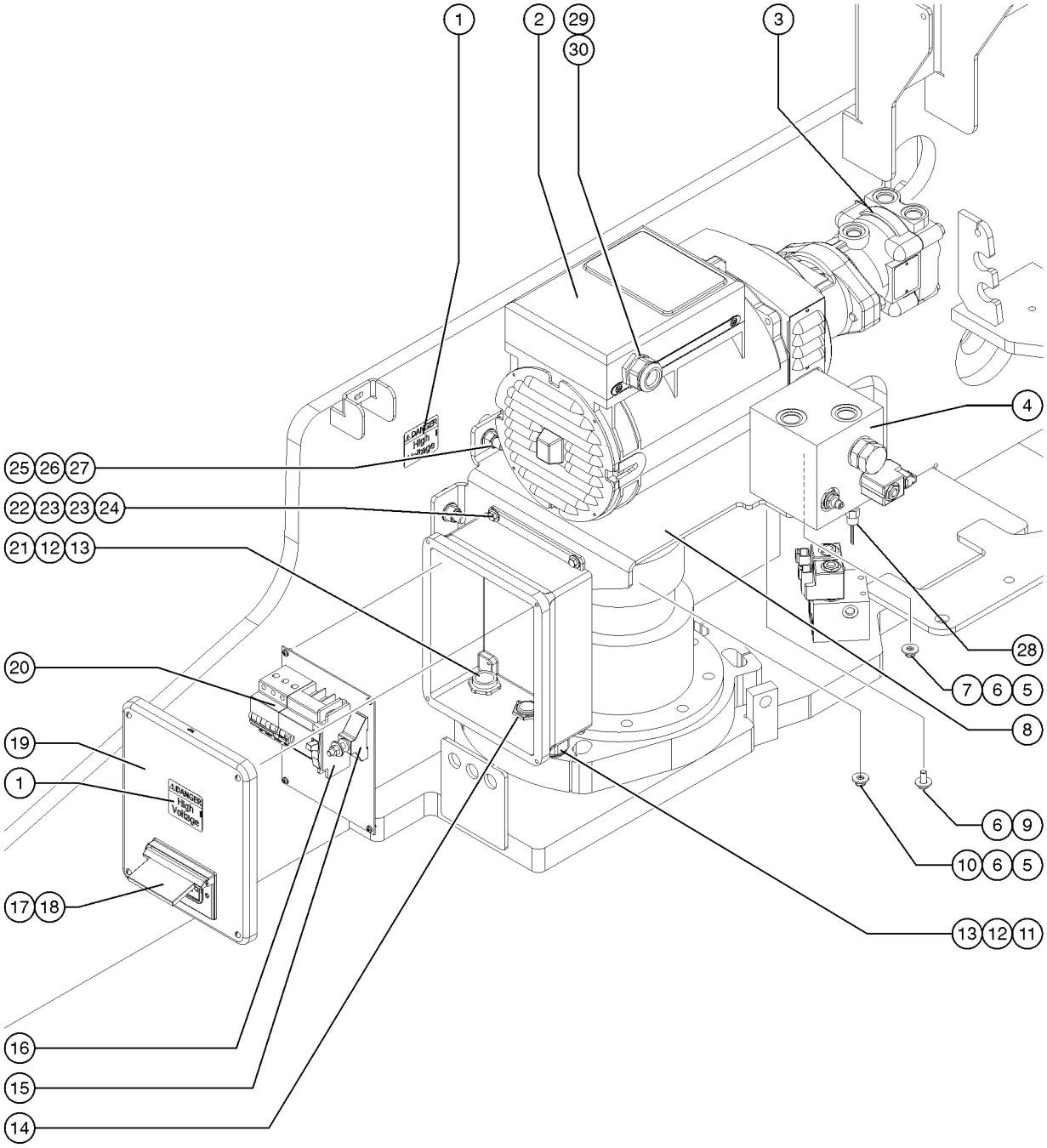

912.1 Welder Option - Chassis Components (to SN S-6013-26173)

Item	Part No.	Description	Qty.
20A-	106375GT	GFCI,50A, 3PH for 106477	
20B	227426GT	ASSEMBLY,GFCI/CIRCUIT BREAKER from SN 22405	
20B-	227425GT	CIRCUIT BREAKER, 35A 3PH for 227426	
20B-	227424GT	CIRCUIT BREAKER,GFCI 30mA 3PH for 227426	
21	106077GT	CABLE SQUEEZE CONN .63-.75	1
22	6888GT	SCREW, HHC, 1/4-20 X 1	
23	6638GT	WASHER, FLAT, USS, 1/4"Y	
24	6091GT	NUT,NYLOCK,1/4-20	
25	9145GT	SCREW,HHC,1/2-13 X 2.5,GR5	
26	6198GT	NUT, NYLOCK, 1/2-13	
27	13066GT	WASHER,FLAT,.5 HARDENED	
28A	146284GT	SWITCH,PRESS,#4NPT,200PSIF for first time replacement, order service kit 1271398GT.	1
28B	1271398GT	KIT,GEN. PRESSURE SWITCH includes pressure switch, hose, fittings and installation instructions	
29	18665GT	LOCKNUT,ELECTRIC,1" NPT	1
30	20776GT	CABLE SQUEEZE CONN	1

912.2 Welder Option - Chassis Components (from SN S-6013-26174)

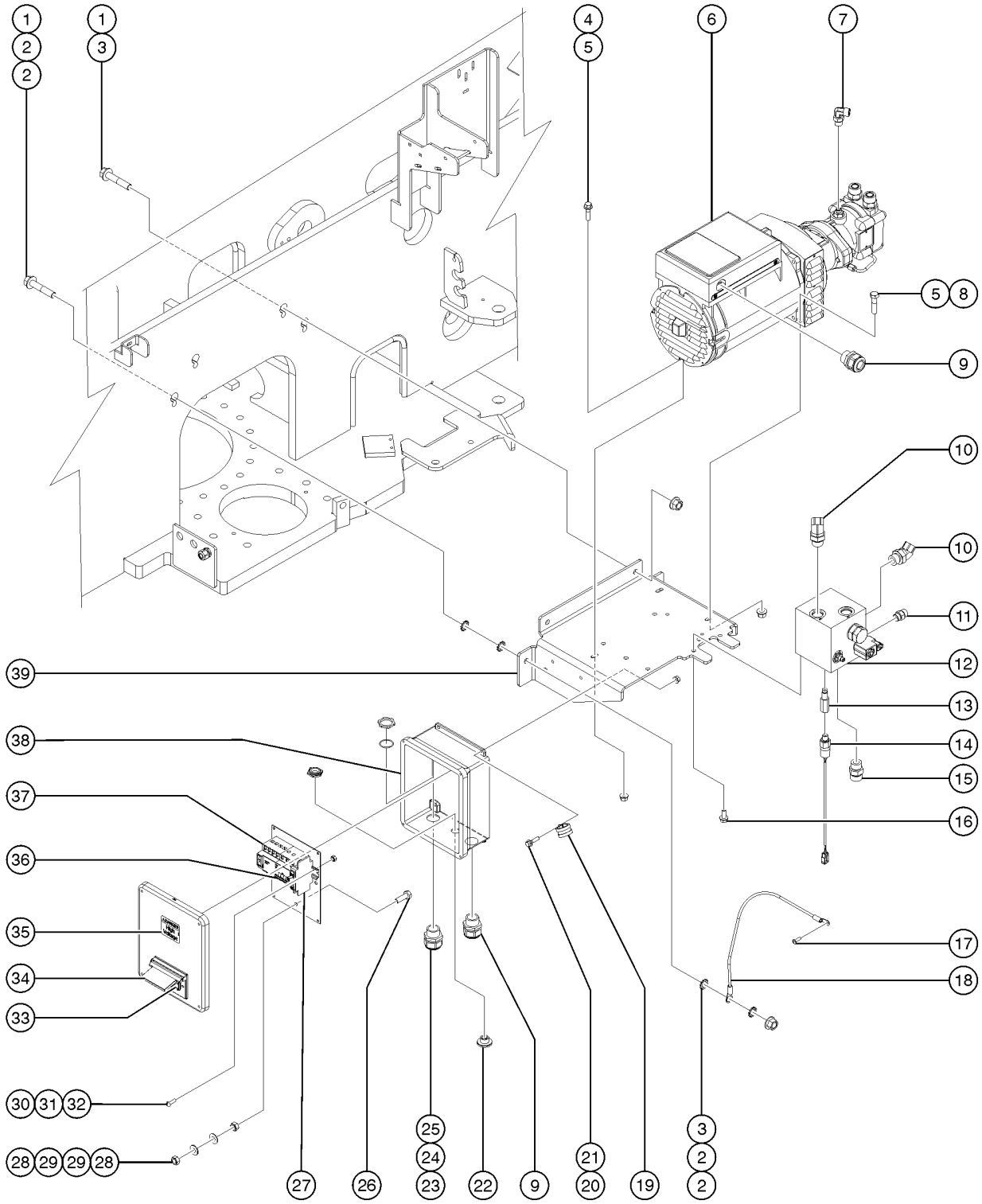

912.2 Welder Option - Chassis Components (from SN S-6013-26174)

Item	Part No.	Description	Qty.
A-	217439GT	ASSEMBLY,WELDER,TURNTABLE,S60/	1
B-	227532GT	J-BOX ASSEMBLY,8X10	1
C-	228320GT	KIT,WIRE,12.5KW WELDER	1
D-	61072-2426GT	ASSY, HOSE, HYD, -12, 3000, STR, 45	1
E-	61072-2526GT	ASSY, HOSE, HYD, -12, 3000, STR, 45	1
F-	89871-4048GT	ASSY, HOSE, HYD, -12, 4000, STR, STR	2
G-	49143-6213GT	ASSY, HOSE, HYD, -8, 3000, STR, 90	1
H-	106203GT	CLAMP,LINK,WELD CABLE/HOSE	
I-	106272GT	BIT,3/16,HEX SOCKET,SECURITY	
J-	106521GT	GROUNDING CABLE ASSEMBLY,165"	
K-	106522GT	GROUNDING CABLE ASSEMBLY,16"	
L-	106523GT	GROUNDING CABLE ASSEMBLY,36"**	
M-	106607GT	HARNESS,LINCOLN WELDER***	
N-	119056GT	CONN, PLUG, 2 WAY, DEUTSCH, DT, ENDCAP	
O-	128050GT	CLAMP, HYD, WELD, AIR, OPT	
P-	1276694GT	KIT, RETROFIT, WELDGEN, MAG BREAKER S-60, S-65 from SN S6004-9708	
Q-	1276694GT	KIT, RETROFIT, WELDGEN, MAG BREAKER S-60X from SN S60X10-21002	
R-	1276694GT	KIT, RETROFIT, WELDGEN, MAG BREAKER S-60XC from SN S60XC10-21099	
S-	1276694GT	KIT, RETROFIT, WELDGEN, MAG BREAKER S-60 TraX from SN S60TX08-17768	
T-	1276694GT	KIT, RETROFIT, WELDGEN, MAG BREAKER S-65 TraX from SN S65TX10-20410	
1	1255802GT	SCREW,HHF,1/2-13X2.5,8,ZAG	4
2	8887GT	WASHER,STAR,EXTERNAL,.5	4
3	1251997GT	NUT,TL FLG,1/2-13,G,ZAG	4
4	824066GT	SCREW,HHC,5/16-18X1.375,8,ZAG	1
5	824028GT	NUT,TL FLG,5/16-18,G,ZAG	3
6	139367GT	GENERATOR,HYDRA,25CC,208V***	1
6-	1273323GT	ALTERNATOR for 139367	
6-	139919GT	FITTING,ORIFICE,.047	

912.2 Welder Option - Chassis Components (from SN S-6013-26174)

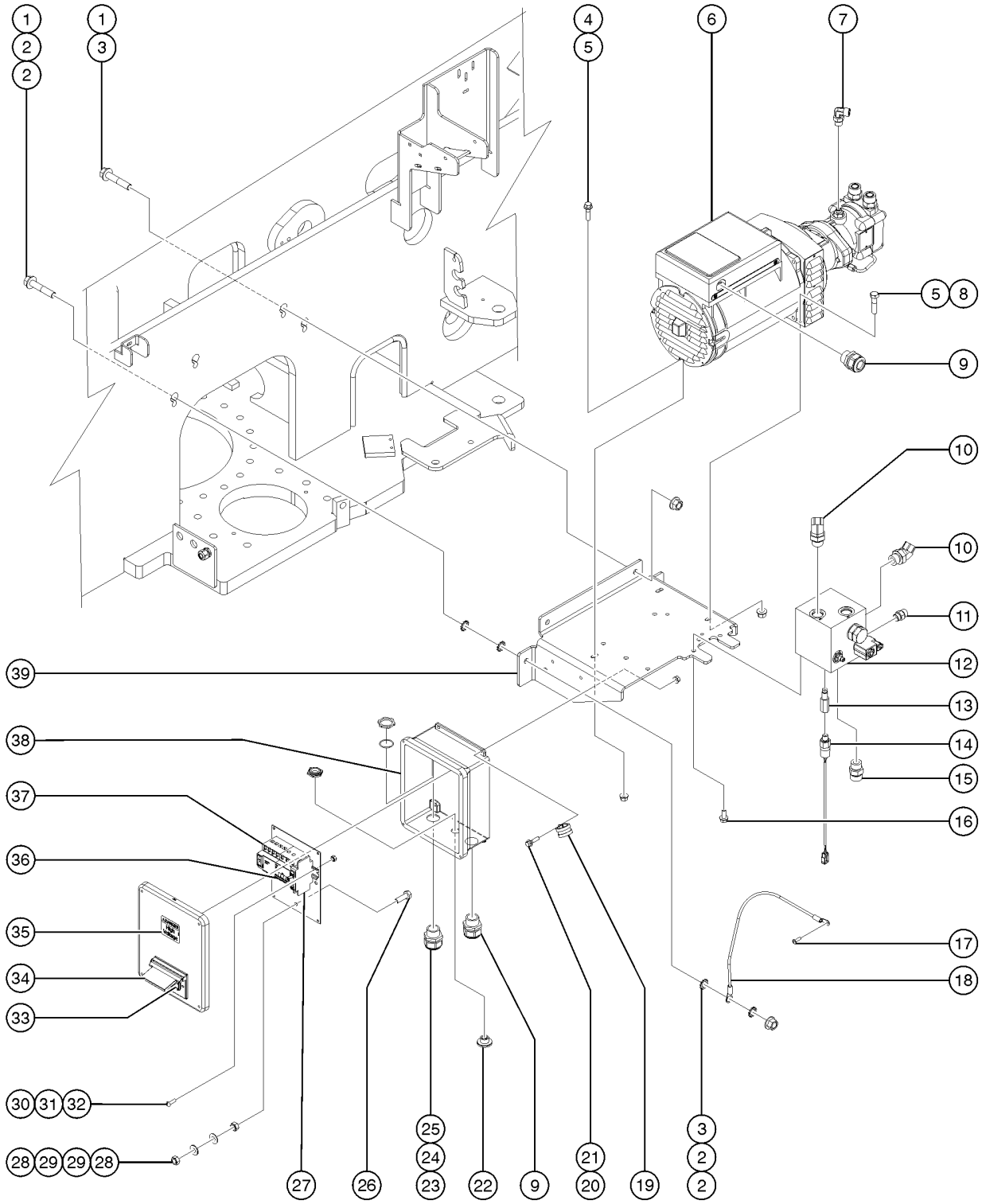

912.2 Welder Option - Chassis Components (from SN S-6013-26174)

Item	Part No.	Description	Qty.
6-	58631GT	COUPLER,INSERT	
6-	33432GT	MOTOR,HYD,25CC FIXED*** Sauer Motor for Harrison Generator; Consult Factory	
6-	32675GT	SEAL KIT,SUNSTRAND	
6-	147404GT	DRIVE COUPLING,KEYED	
6-	147405GT	DRIVE COUPLING, 13 TOOTH	
7	48932GT	FITTING,ELBOW,90D,520220-8***	1
8	824087GT	SCREW, HHF, 5/16-18 X 1.25, 8, ZAG	2
9	20776GT	CABLE SQUEEZE CONN	1
9-	18665GT	LOCKNUT,ELECTRIC,1" NPT	1
10	48963GT	FITTING,ELBOW,45D,520320-12***	4
11	48933GT	CONN,520120-8***	1
12	101516GT	MANIFOLD,DRIVE OIL DIVERTER	1
12-	102746GT	VALVE,PILOT OPER DIRECTIONAL	
12-	106394GT	ORIFICE DISC,.030,CONE	
12-	146284GT	SWITCH,PRESS,#4NPT,200PSIF	
12-	94760GT	VALVE,SOLENOID,10V,W/OUT COIL*	
12-	94765GT	COIL-10V DC***	
13	146285GT	CONN, SAE#4-1/4" NPT	1
14A	146284GT	SWITCH,PRESS,#4NPT,200PSIF for first time replacement, order service kit 1271398GT.	1
14B	1271398GT	KIT,GEN. PRESSURE SWITCH includes pressure switch, hose, fittings and installation instructions	
15	48960GT	FITTING,CONN,520120-12***	2
16	824085GT	SCREW, HHF, 5/16-18 X .75, 8, ZAG	2
17	1257227GT	SCREW,PHPM,10-32X.625,ZAG	1
18	106520GT	GROUNDING CABLE ASSEMBLY,18"	1
19	18666GT	CLAMP,1.00,#16 X 1/4,RUB CUSH	1
20	824079GT	SCREW,HHF,1/4-20X1,8,ZAG	2
21	824027GT	NUT, TL FLG, 1/4-20, G, ZAG	2
22	106495GT	PLUG,1/2" HUBBLE	1

912.2 Welder Option - Chassis Components (from SN S-6013-26174)

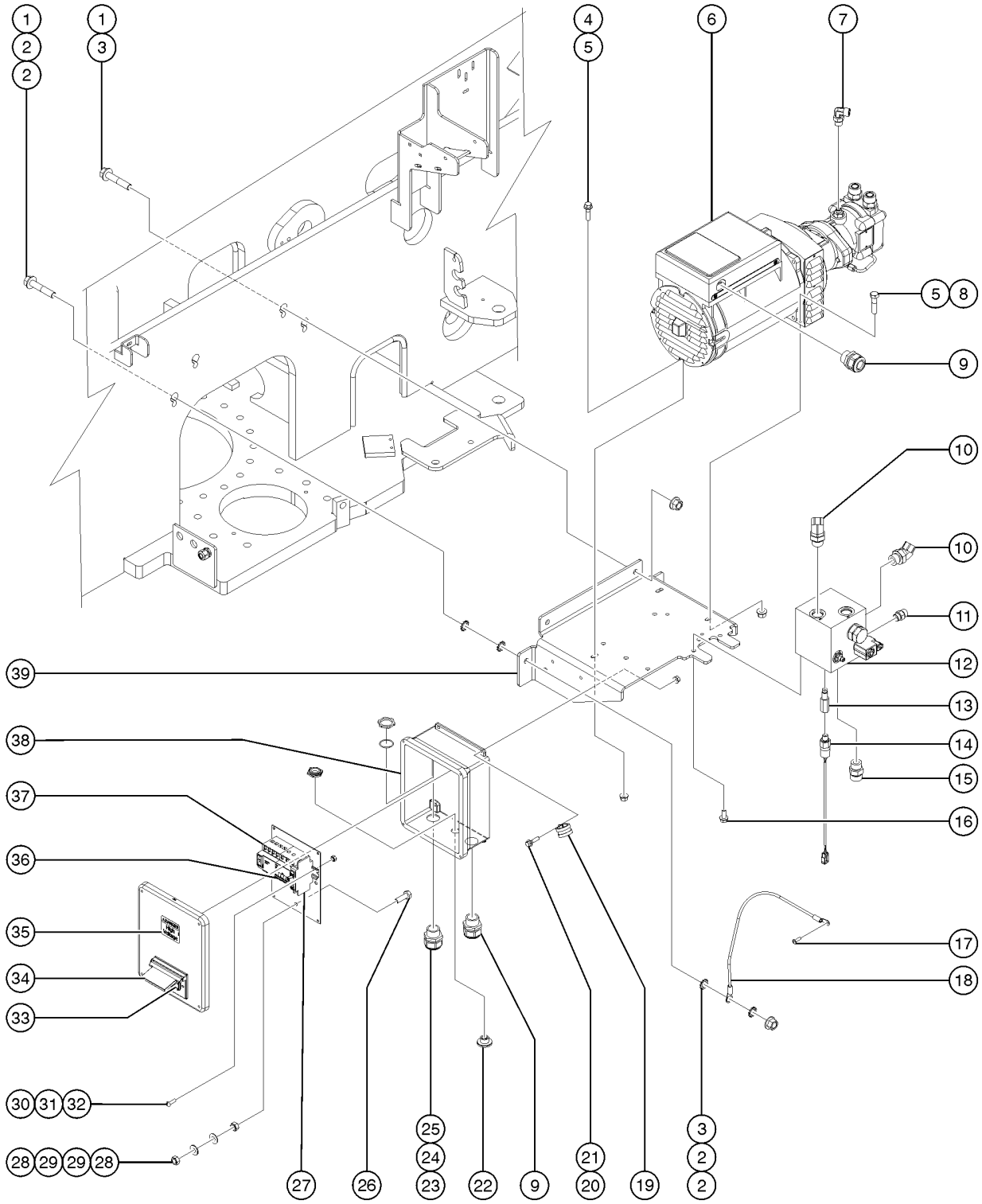

912.2 Welder Option - Chassis Components (from SN S-6013-26174)

Item	Part No.	Description	Qty.
23	106077GT	CABLE SQUEEZE CONN .63-.75	1
24	106104GT	O-RING,SEAL RING,1" NPT (PKG)	2
25	18665GT	LOCKNUT,ELECTRIC,1" NPT	2
26	49379GT	SCREW,HHC,M8 X 1.25 X 25	1
27	106073GT	CIRCUIT BREAKER,20A,SINGLE PH	1
28	22571GT	NUT,HEX,M8 X 1.25	2
29	6638GT	WASHER, FLAT, USS, 1/4"Y	2
30	54365GT	SCREW,PHIL,PHM,10-32 X .5,SSTL	2
31	228332GT	DIN RAIL, 6.50"	1
32	6178GT	NUT, NYLOCK, 10-32	2
33	80543GT	RECEPTACLE, 120VAC, 20A, GFCI	1
34	74006GT	COVER,GFCI,HORIZONTAL,WEATHER	1
35	82237GT	DECAL,DANGER,HIGH VOLTAGE	1
36	227425GT	CIRCUIT BREAKER, 35A 3PH	1
37	227424GT	CIRCUIT BREAKER,GFCI 30mA 3PH	1
38	106206GT	J-BOX,CIRCUIT BREAKERS,8X10***	1
39	106114pGT	BRACKET,GENERATOR 12.5 KW,PNTD	1

913.1 Welder Option - Platform Components (to SN S-6013-26173)

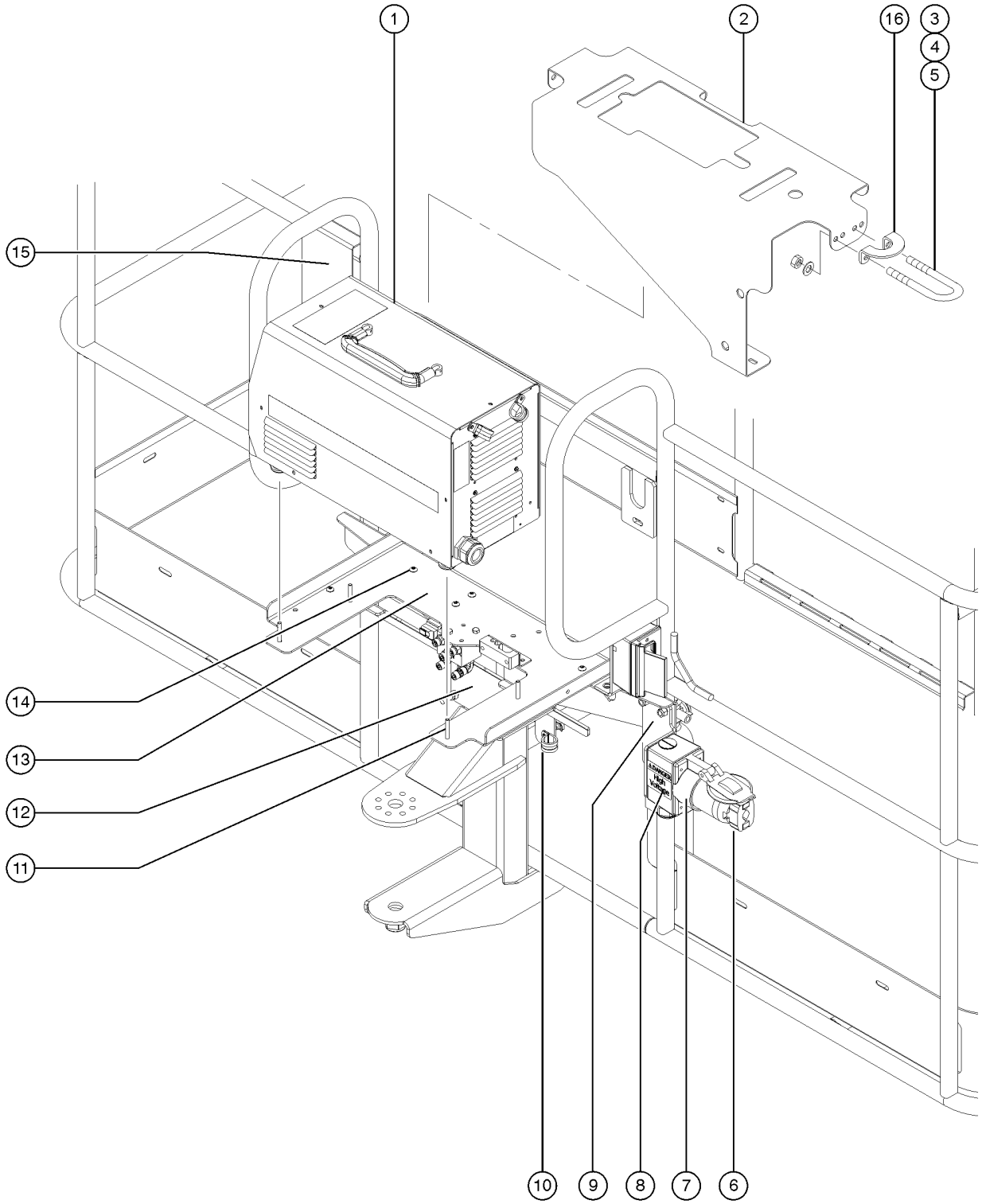

913.1 Welder Option - Platform Components (to SN S-6013-26173)

Item	Part No.	Description	Qty.
	88406GT	FIRE EXTINGUISHER includes mounting strap	
	228320GT	KIT,WIRE,12.5KW WELDER 63" heavy cable assy	
	228321GT	KIT,WIRE,12.5KW WELDER light wire assy	
		WELD CABLE TO PLAT,S65 Part is no longer available	
	T113129GT	ASSEMBLY, WELD CABLE, S60 S60 models (from SN 22586)	
	106115GT	WIRE CABLE 8 GA/4 CON.SO WELD CABLE TO PLAT,S60	936 inches
	T114145GT	ASSEMBLY, WELD CABLE, S65 S65 models (from SN 22586)	
	77685GT	BOOT,CABLE TERM,MED.BLACK,4/0 to SN 21036	
	8910GT	BOOT,CABLE TERM,MED.RED,4/0 to SN 21036	
	89977GT	BOOT,CABLE TERMINAL,BLACK,2/0 from SN 21037	
	51147GT	BOOT,CABLE TERMINAL,LG,RED,2/0 from SN 21037	
1A	101525GT	WELDER,INVERTEC V275-S	1
1A-	106275GT	KIT,WELD LEADS ASSY,V275S	
1A-	106183GT	FUSE,.6AMP,250V,WELDER,V275S	
2	101547PGT	BRACKET,WELDER SUPPORT,PNT	1
3	122755GT	UBOLT,FLATTENED,1.5DIAX3/8 UNC to SN 24925	2
4	5397GT	WASHER, FLAT, USS, 5/16-18	
5	4828GT	NUT, NYLOCK, 3/8-16 to SN 24925	
6	106112GT	PLUG,4-WIRE,3-PHASE,50A,MALE	1
7	106111GT	RECEPTCL,LOCK 3-PH,50A,4 WIRE	1
7-	106110GT	T-BOX,2.75X4.5X2.63,3PH	
7-	101732GT	COVER,WEATHERPROOF 3-PHASE	
8	82237GT	DECAL,DANGER,HIGH VOLTAGE	2
9	101731PGT	BRACKET,POWER TO PLAT TBOX,PNT	1
9-	4828GT	NUT, NYLOCK, 3/8-16	
9-	5397GT	WASHER, FLAT, USS, 5/16-18	
9-	106044GT	U-BOLT,3/8-16X4X4.63X3.00	

913.1 Welder Option - Platform Components (to SN S-6013-26173)

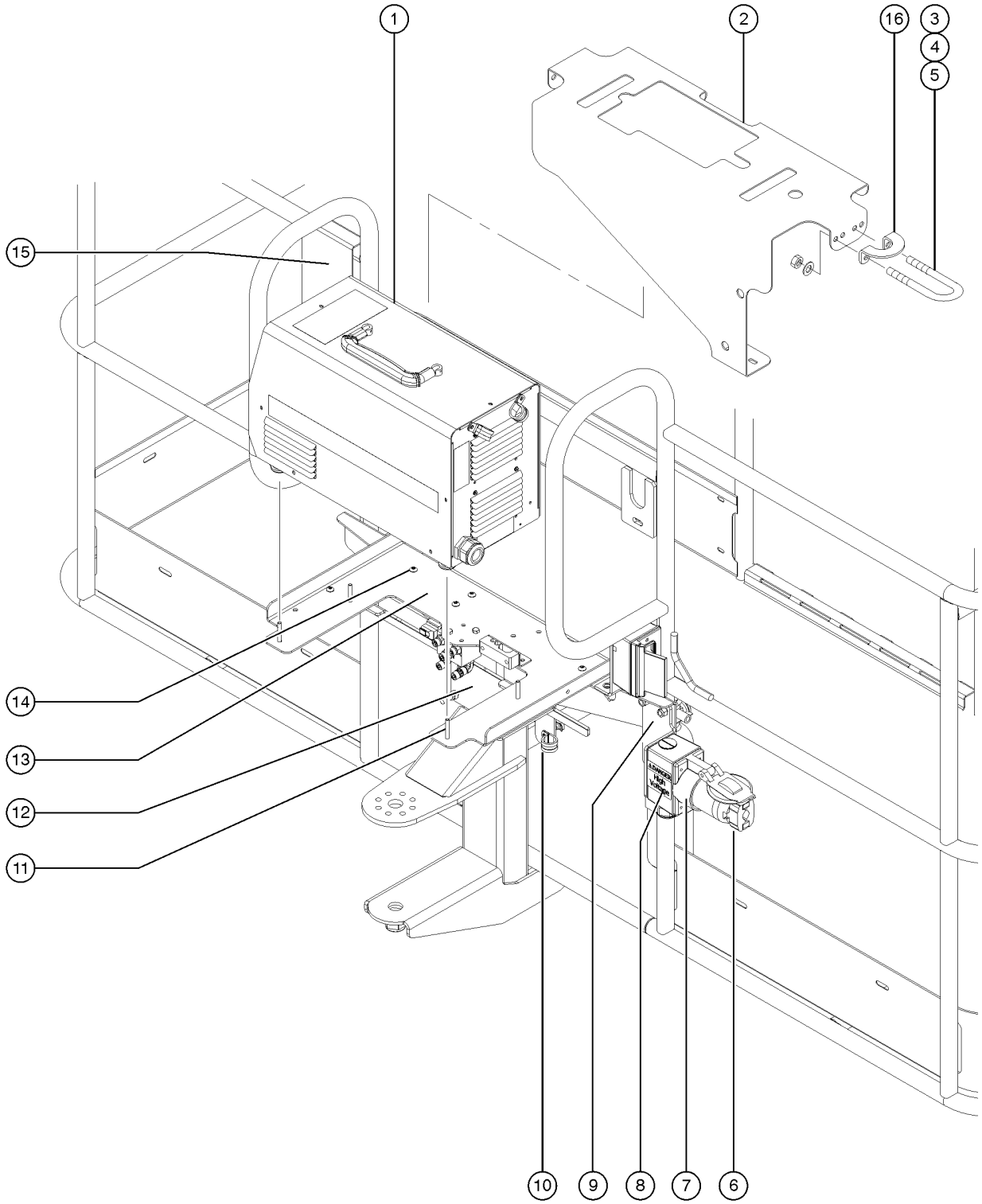

913.1 Welder Option - Platform Components (to SN S-6013-26173)

Item	Part No.	Description	Qty.
10	18666GT	CLAMP,1.00,#16 X 1/4,RUB CUSH	
11	106141GT	SCREW,SECURITY,1/4-20 X 1.75LG	
12	101701GT	BRACKET,WELDER MOUNT SUPPORT**	1
13	106109PGT	BRACKET,WELDER COVER,PNTD	1
13-	4828GT	NUT, NYLOCK, 3/8-16	
13-	5397GT	WASHER, FLAT, USS, 5/16-18	
13-	6782GT	NUT, NYLOCK, 5/16-18	
14	128322GT	SCREW,5/16-18X1.00,SECURITY TO	
14-	128323GT	BIT,TORX SOCKET,SECURITY tool for 128322	
15	106204PGT	BRACKET,V275S WELD LEADS	
16	217366GT	BRACKET,WELDER TOP from SN 24925	2
16-	6782GT	NUT, NYLOCK, 5/16-18	
16-	128322GT	SCREW,5/16-18X1.00,SECURITY TO	

913.2 Welder Option - Platform Components (from SN S-6013-26174)

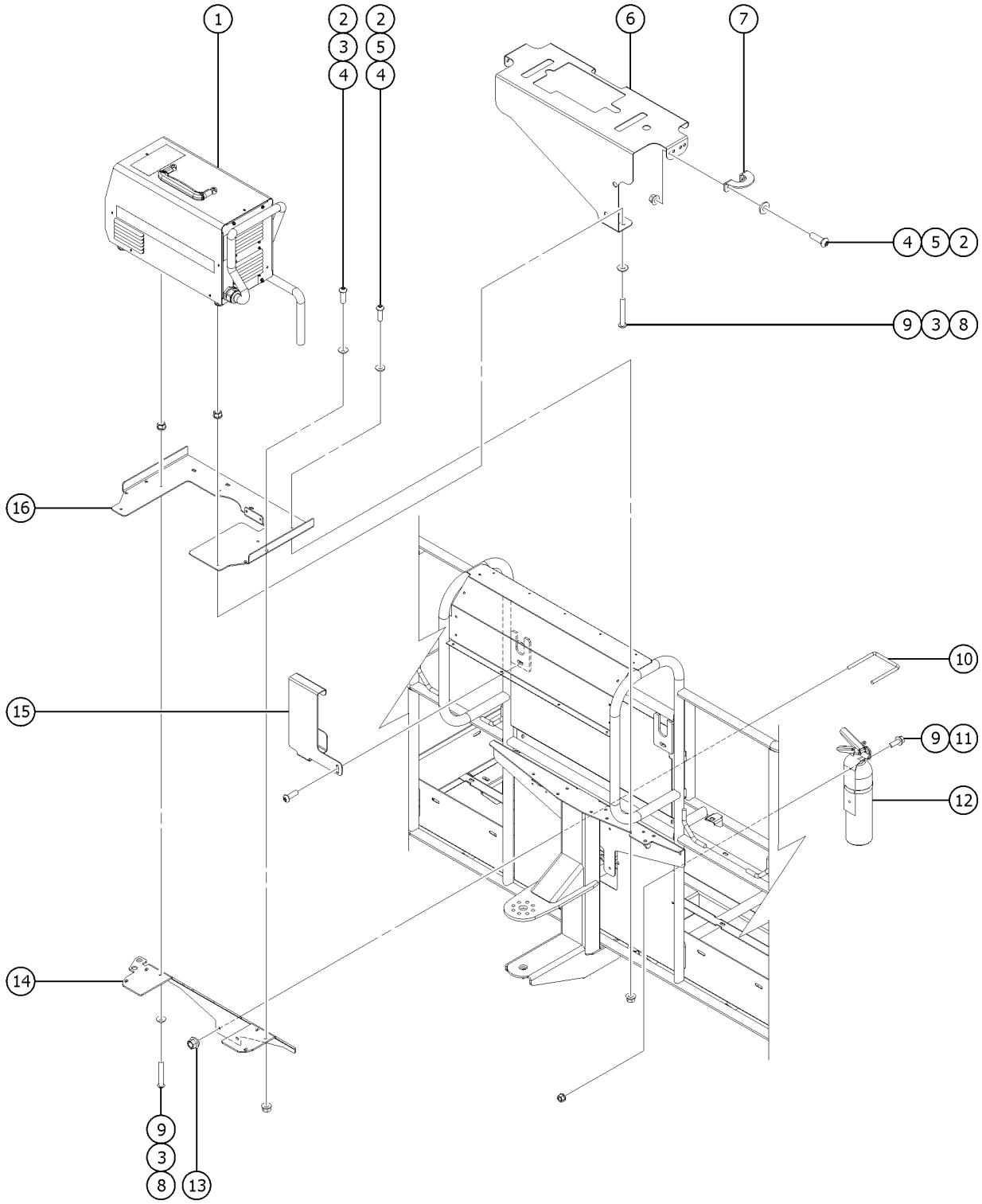

913.2 Welder Option - Platform Components (from SN S-6013-26174)

Item	Part No.	Description	Qty.
A-	217440GT	ASSEMBLY,WELDER,PLATFORM,S60/6	1
B-	228320GT	KIT,WIRE,12.5KW WELDER	
C-	228321GT	KIT,WIRE,12.5KW WELDER	
D-	106273GT	BIT,T-27,TORX SOCKET,SECURITY	1
E-	214620GT	SOCKET,3P,30A,4 WIRE, FEM	1
F-	214621GT	SOCKET, BOOT, 3P, 30A, 4 WIRE	1
G-	214622GT	PLUG, BOOT, 3P, 30A, 4 WIRE	1
H-	106607GT	HARNESS,LINCOLN WELDER***	
I-	110276GT	FIRE SLEEVE, 1.25"	16 inches
J-	110276GT	FIRE SLEEVE, 1.25"	23 inches
K-	110276GT	FIRE SLEEVE, 1.25"	28 inches
1A	101525GT	WELDER,INVERTEC V275-S	1
1A-	106183GT	FUSE,.6AMP,250V,WELDER,V275S	
1A-	106275GT	KIT,WELD LEADS ASSY,V275S	
1A-	214623GT	PLUG, 3P,30A, 4 WIRE, MALE	
1B	214619GT	WELDER, MILLER, CST 280	1
2	128322GT	SCREW,5/16-18X1.00,SECURITY TO	10
2-	128323GT	BIT,TORX SOCKET,SECURITY	
3	824113GT	WASHER,FLAT,USS,1/4,ZAG	5
4	824028GT	NUT,TL FLG,5/16-18,G,ZAG	10
5	825358GT	WASHER,FLAT,5/16,USS,ZAG	9
6	101547PGT	BRACKET,WELDER SUPPORT,PNT	1
7	217366GT	BRACKET,WELDER TOP	2
8	106141GT	SCREW,SECURITY,1/4-20 X 1.75LG	4
9	824027GT	NUT, TL FLG, 1/4-20, G, ZAG	6
10	106044GT	U-BOLT,3/8-16X4X4.63X3.00	1

913.2 Welder Option - Platform Components (from SN S-6013-26174)

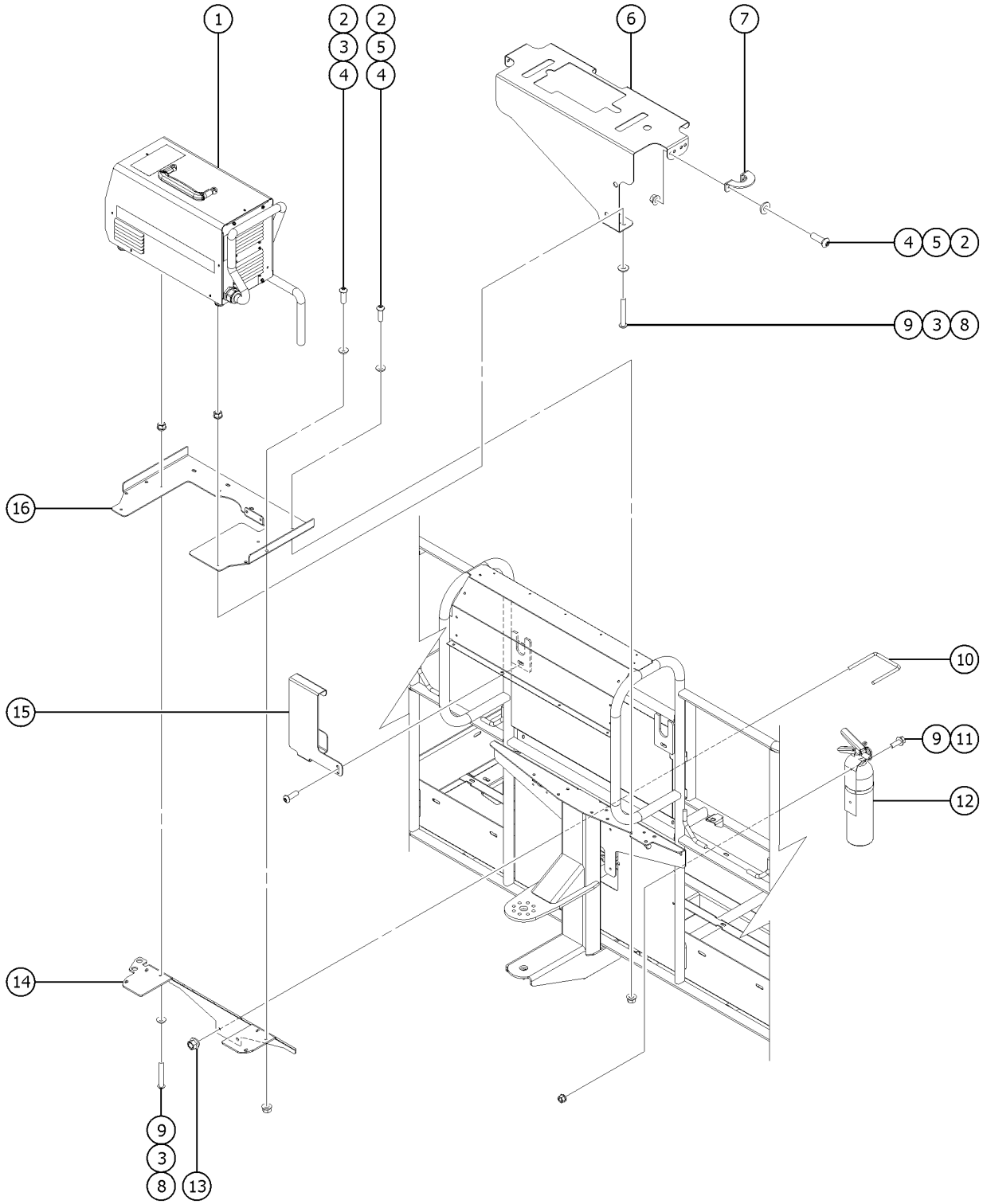

913.2 Welder Option - Platform Components (from SN S-6013-26174)

Item	*Part No.*	*Description*	*Qty.*
11	824078GT	SCREW,HHF,1/4-20X.75,8,ZAG	2
12	88406GT	FIRE EXTINGUISHER includes mounting strap	1
13	824029GT	NUT, TL FLG, 3/8-16, G, ZAG	2
14	101701PGT	BRACKET,WELDER MNT SUPPORT,PNT	1
15	106204PGT	BRACKET,V275S WELD LEADS	1
16	106109PGT	BRACKET,WELDER COVER,PNTD	1

914.1 Welder Option - Generator Components

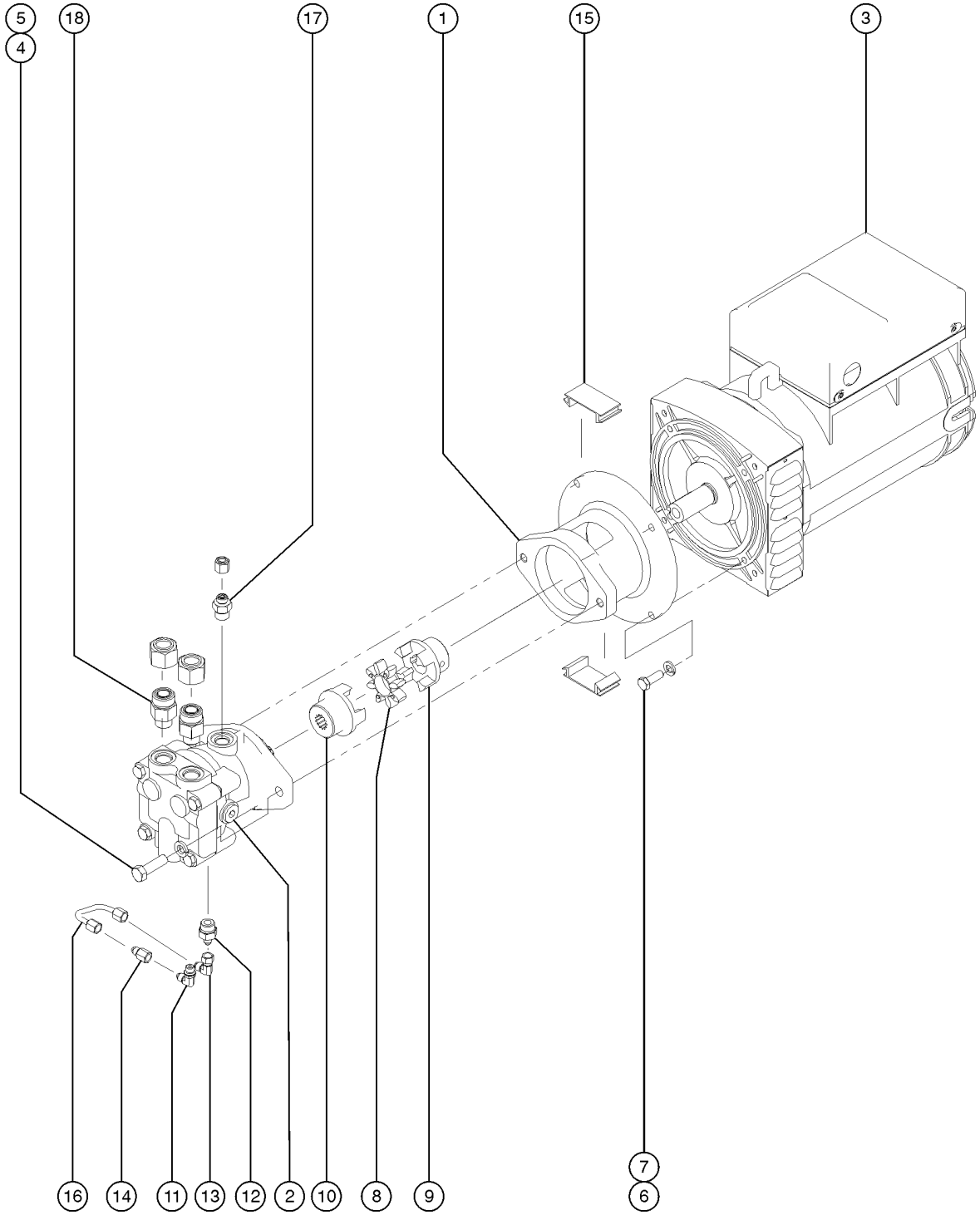

Item	Part No.	Description	Qty.
		GENERATOR,HYDRA,25CC,208V refer to section 912.1	1
1		MOTOR MOUNT consult factory	1
2		MOTOR,HYD,25CC FIXED*** refer to section 912.1	1
3		ALTERNATOR refer to section 912.1	1
4	6036GT	WASHER,LOCK,.625 PLTD	2
5	22788GT	SCREW,HHC,1/2-13 X 1.75	2
6	44064GT	SCREW,HHC,M10 X 30MM,	4
7	22700GT	WASHER,LOCK,M10	4
8	58631GT	COUPLER,INSERT	1
9	147404GT	DRIVE COUPLING,KEYED	1
10	147405GT	DRIVE COUPLING, 13 TOOTH	1
11	13921GT	ELBOW,070220-4-4	1
12	39879GT	CONNECTOR,070120-4-8	1
13	87246GT	ELBOW,SWIVEL NUT 90DEG,-4	1
14	139919GT	FITTING,ORIFICE,.047	1
15		MOUNT COVER consult factory	2
16	147418GT	ASSY,BLEED LINE (139367)	1
17	48914GT	CONN,520120-4-8	1
18	48975GT	CONN,520120-12-10	2

915.1 Aircraft Protection Package, S-65 and S-65 TraX

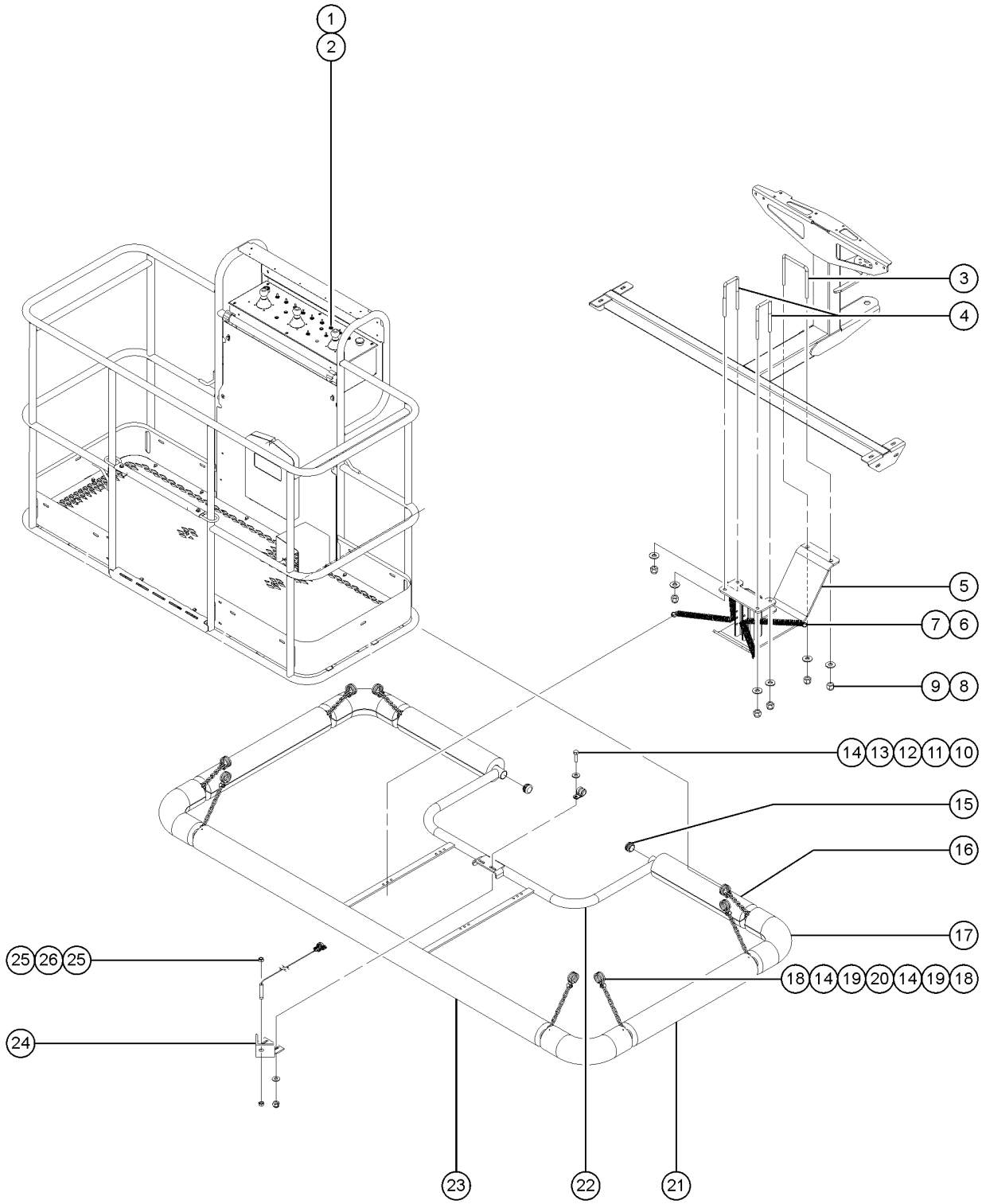

Item	Part No.	Description	Qty.
1	128203GT	SWITCH TOGGLE ASSY SPDT 2P MOM	1
1-	139882GT	HARN, AC PROTECTION BYPASS	1
2	27246GT	BOOT,TOGGLE SWITCH,SHORT*	1
3	106044GT	U-BOLT,3/8-16X4X4.63X3.00	1
4	66472GT	U-BOLT, SQR, 3/8-16X2X5, PLTD	2
5	139904GT	WELDMENT, SKIDPLATE**	1
6	88384GT	SPRING, SS, 3/4-EO750-69-4500	4
7	88385GT	SPRING, SS, 1/2-EO500-49-4500	4
8	4828GT	NUT, NYLOCK, 3/8-16	
9	5397GT	WASHER, FLAT, USS, 5/16-18	
10	6888GT	SCREW, HHC, 1/4-20 X 1	
11	6638GT	WASHER, FLAT, USS, 1/4"Y	
12	6833GT	CLAMP,0.50,#8 X 1/4,RUB CUSH	1
13	6638GT	WASHER, FLAT, USS, 1/4"Y	
14	6091GT	NUT,NYLOCK,1/4-20	
15	55753GT	BUMPER, PLASTIC, 1.25 O.D.	2
16	75617-1675GT	PADDING,FOAM 3.5"OD X 1.50"ID	2
17	75636GT	PADDING,FOAM,3.0"X1.50ID 90DEG	4
18	21618GT	CLAMP,1.13,#18 X 1/4,RUB CUSH	16
19	6090GT	SCREW, HHC, 1/4-20 X .75	
20	56426-700GT	CHAIN,NO.2 (11 LINKS)	8
21	75617-2275GT	PADDING,FOAM 3.5"OD X 1.50"ID	2
22	139181GT	WELDMENT,AIRCRAFT SENSOR BUMPR	1
23	75617-6475GT	PADDING,FOAM 3.5"OD X 1.50"ID use until exhausted	1
23B	75617-3238GT	PADDING, FOAM 3.0" OD X 1.50" ID	2
24	77797GT	WELDMENT, SENSOR MOUNT	1
25	88390GT	NUT,HEX,M8,PLASTIC	
26	81532GT	HARNESS, PROX. KILL (includes PN 27391 for Proximity Sensor)	1

915.1 Aircraft Protection Package, S-65 and S-65 TraX

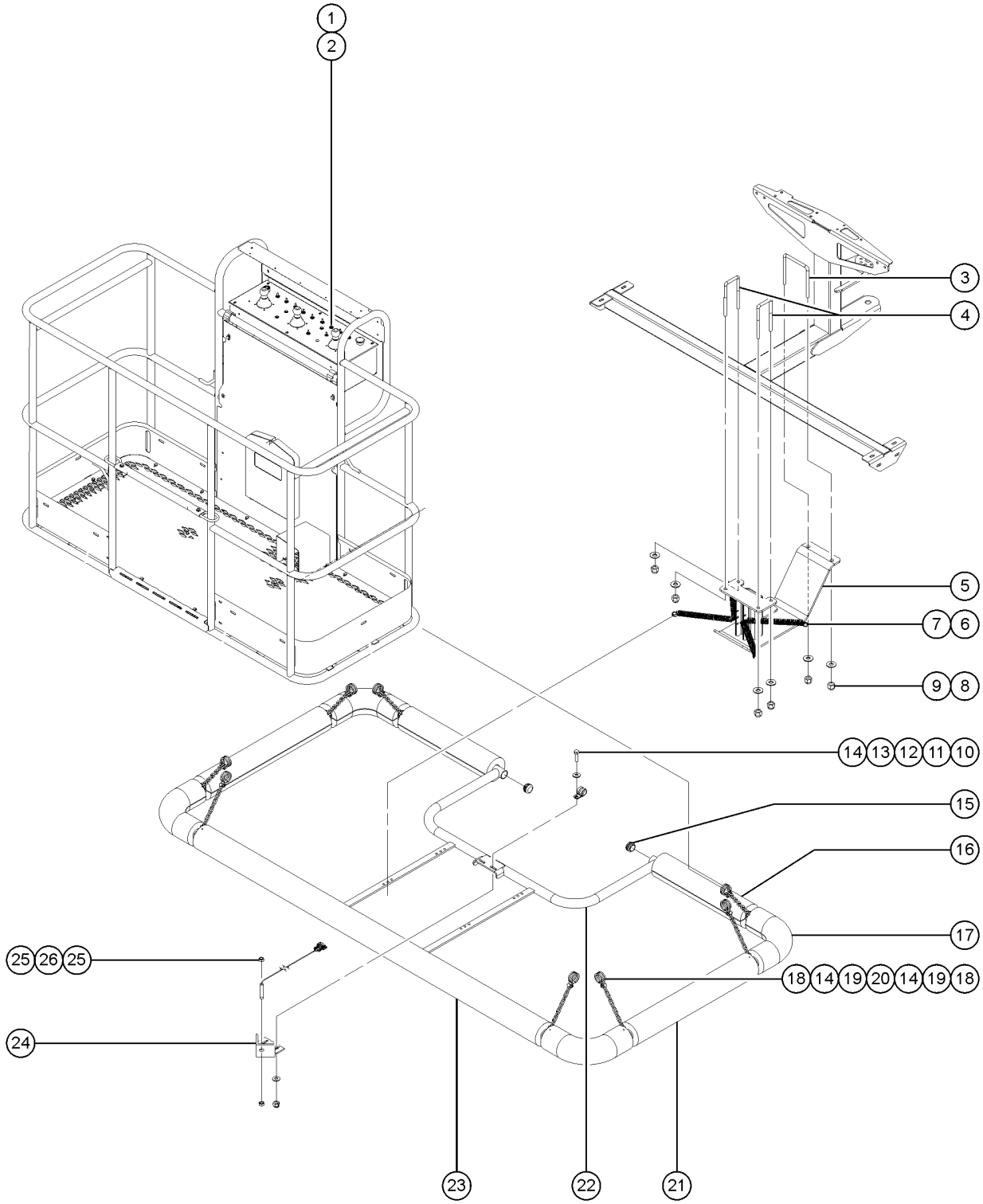

Item	*Part No.*	*Description*	*Qty.*
26-	27391GT	PROXIMITY SENSOR***	

916.1 Aircraft Protection Package, Deluxe, S-65 and S-65 TraX

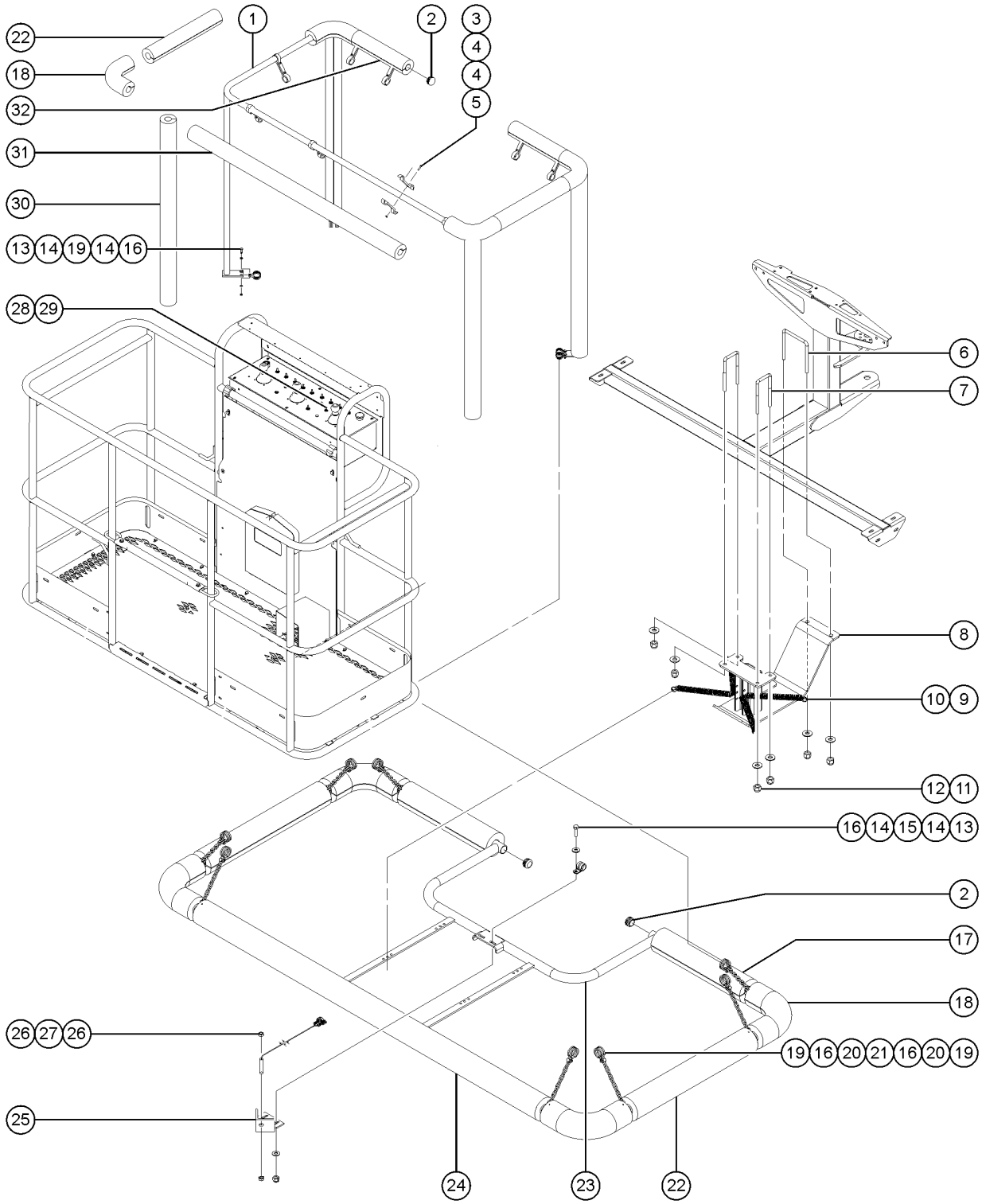

916.1 Aircraft Protection Package, Deluxe, S-65 and S-65 TraX

Item	Part No.	Description	Qty.
A	228448GT	HARN,PROX KILL+AC BYPASS S60	1
1	46188GT	WELDMENT, AIRCRAFT TOP BUMPER	1
2	55753GT	BUMPER, PLASTIC, 1.25 O.D.	4
3	122231GT	SCREW,BHSC,1/4-20 X 1	
4	122073GT	SUPPORT, RAILING	20
5	6889GT	NUT,LP NYLOCK,1/4-20	
6	106044GT	U-BOLT,3/8-16X4X4.63X3.00	1
7	66472GT	U-BOLT, SQR, 3/8-16X2X5, PLTD	2
8	139904GT	WELDMENT, SKIDPLATE**	1
9	88384GT	SPRING, SS, 3/4-EO750-69-4500	4
10	88385GT	SPRING, SS, 1/2-EO500-49-4500	4
11	4828GT	NUT, NYLOCK, 3/8-16	
12	5397GT	WASHER, FLAT, USS, 5/16-18	
13	6888GT	SCREW, HHC, 1/4-20 X 1	
14	6638GT	WASHER, FLAT, USS, 1/4"Y	
15	6833GT	CLAMP,0.50,#8 X 1/4,RUB CUSH	1
16	6091GT	NUT,NYLOCK,1/4-20	
17	75617-1675GT	PADDING,FOAM 3.5"OD X 1.50"ID	2
18	75636GT	PADDING,FOAM,3.0"X1.50ID 90DEG	8
19	21618GT	CLAMP,1.13,#18 X 1/4,RUB CUSH	16
20	6090GT	SCREW, HHC, 1/4-20 X .75	
21	56426-700GT	CHAIN,NO.2 (11 LINKS)	8
22	75617-2275GT	PADDING,FOAM 3.5"OD X 1.50"ID	4
23	139181GT	WELDMENT,AIRCRAFT SENSOR BUMPR	1
24	75617-6475GT	PADDING,FOAM 3.5"OD X 1.50"ID use until exhausted	1
24B	75617-3238GT	PADDING, FOAM 3.0" OD X 1.50" ID	2
25	77797GT	WELDMENT, SENSOR MOUNT	1
26	88390GT	NUT,HEX,M8,PLASTIC	

916.1 Aircraft Protection Package, Deluxe, S-65 and S-65 TraX

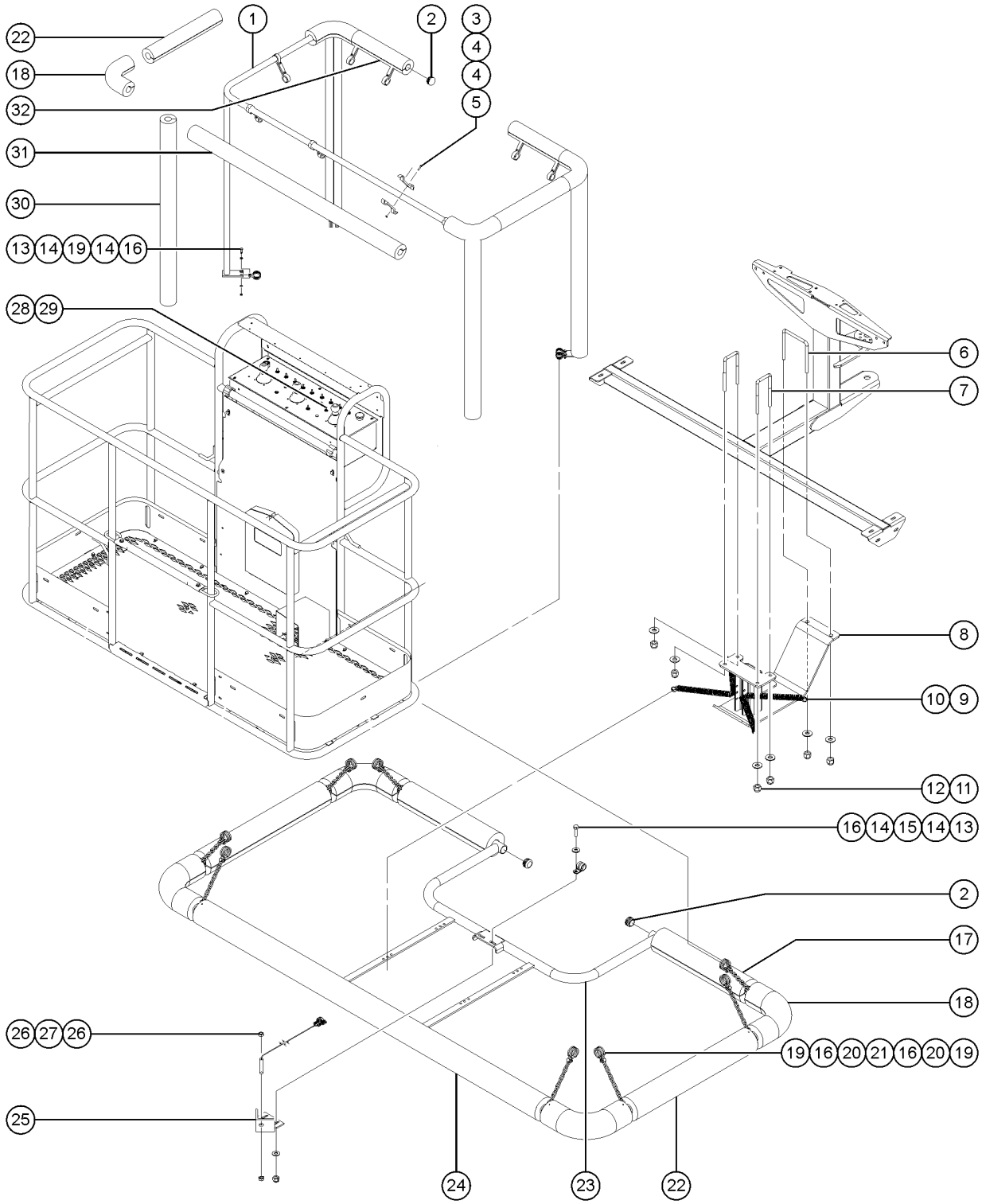

916.1 Aircraft Protection Package, Deluxe, S-65 and S-65 TraX

Item	*Part No.*	*Description*	*Qty.*
27	228448GT	HARN,PROX KILL+AC BYPASS S60	1
28	128203GT	SWITCH TOGGLE ASSY SPDT 2P MOM	1
28-	139882GT	HARN, AC PROTECTION BYPASS	1
29	27246GT	BOOT,TOGGLE SWITCH,SHORT*	1
30	75617-4788GT	PADDING,FOAM 3.5"OD X 1.50"ID	4
31	75617-3138GT	PADDING, FOAM 3.0" OD X 1.50" ID	2
32	75617-1538GT	PADDING,FOAM 3.5"OD X 1.50"ID	2

917.1 Panel Cradle Option

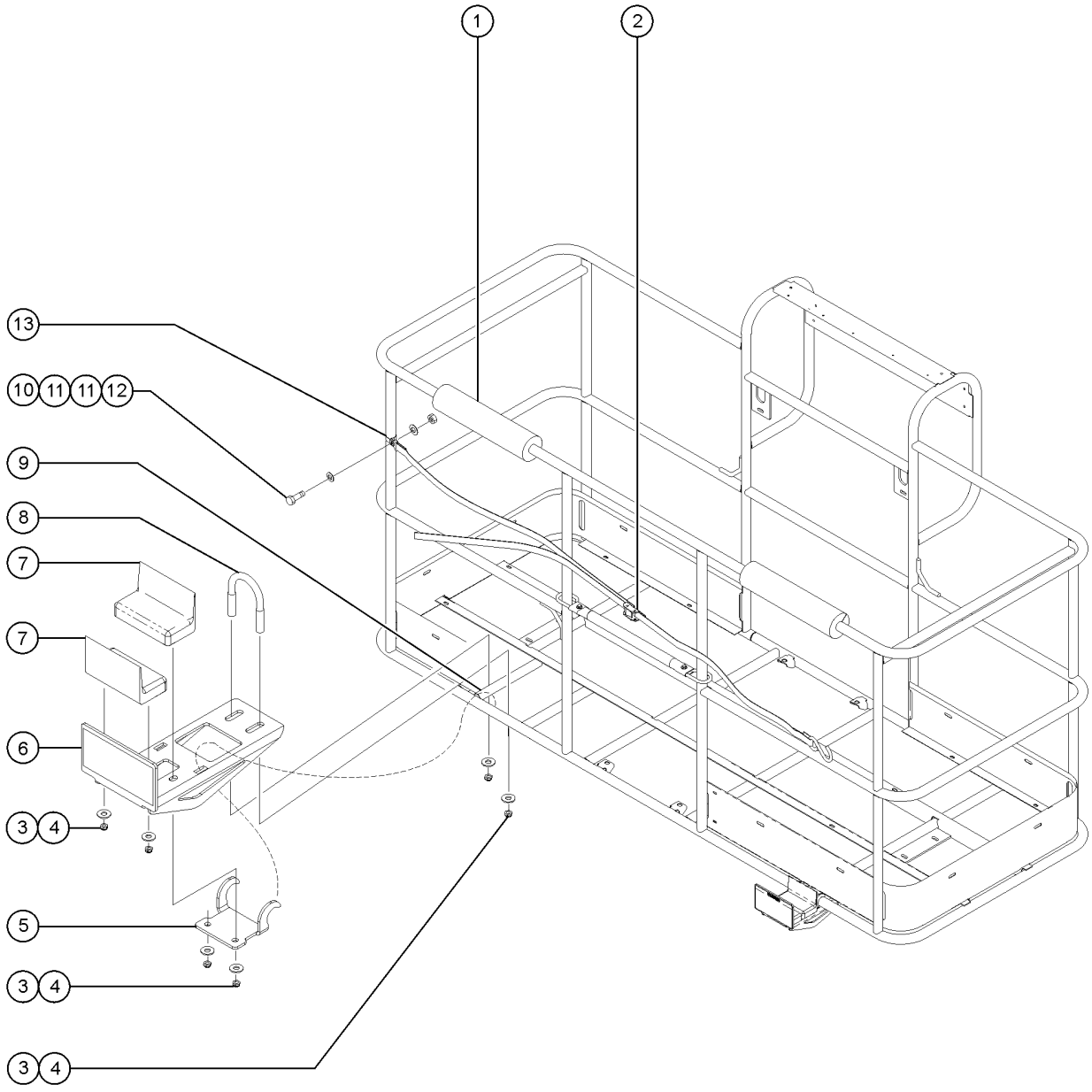

917.1 Panel Cradle Option

Item	Part No.	Description	Qty.
A-	77683GT	ACCESSORY,PANEL CRADLE,ANSI (ANSI models)	
B-	94493-SGT	KIT,PANEL CRADLE,CE (CE models)	
1	88377-1400GT	FOAM PAD***	2
2	77664GT	ADJUSTABLE STRAP ASSY	1
3	1274322GT	NUT,NYLOCK FLG,3/8-16,F,ZAG	8
4	5397GT	WASHER, FLAT, USS, 5/16-18 for machines before 2010	
5	228849GT	FORMING,SECONDARY SUPPORT 77576P is no longer available. For machines before 2010, must install Qty 2 service kit 233992 (ANSI) or 233993 (CE) for initial replacement.	2
6	228848GT	FORMING PANEL CRADLE 89724 is no longer available. For machines before 2010, must install Qty 2 service kit 233992 (ANSI) or 233993 (CE) for initial replacement.	2
6-	233992GT	KIT,PANEL CRADEL BRACKET,WORD (ANSI models) (includes hook, panel support bracket and installation instructions)	1
6-	233993GT	KIT,PANEL CRADLE BRACKET,SYMBL (CE models) (includes hook, panel support bracket and installation instructions)	1
7	56934GT	PAD,REST,1"THICK,FLANGED	4
7A	824038GT	NUT, TL JAM, 3/8-16, A, ZAG for 56934	4
8	1251600GT	U-BOLT, FLATTENED, 1.5DIA. X 3/8 UNC,ZAG	2
9	73463-1175GT	TUBE, RD, ALUM, 1.25 X .083 X 11.75	2
10	1256855	SCREW,HHF,1/4-20X.625,8,ZAG	1
11	6638GT	WASHER, FLAT, USS, 1/4"Y for machines before 2010	
12	1277924GT	NUT,NYLOCK FLG,1/4-20,F,ZAG	1
13	56424GT	CLAMP,1.25X.5 RUBBER-CUSHION	1

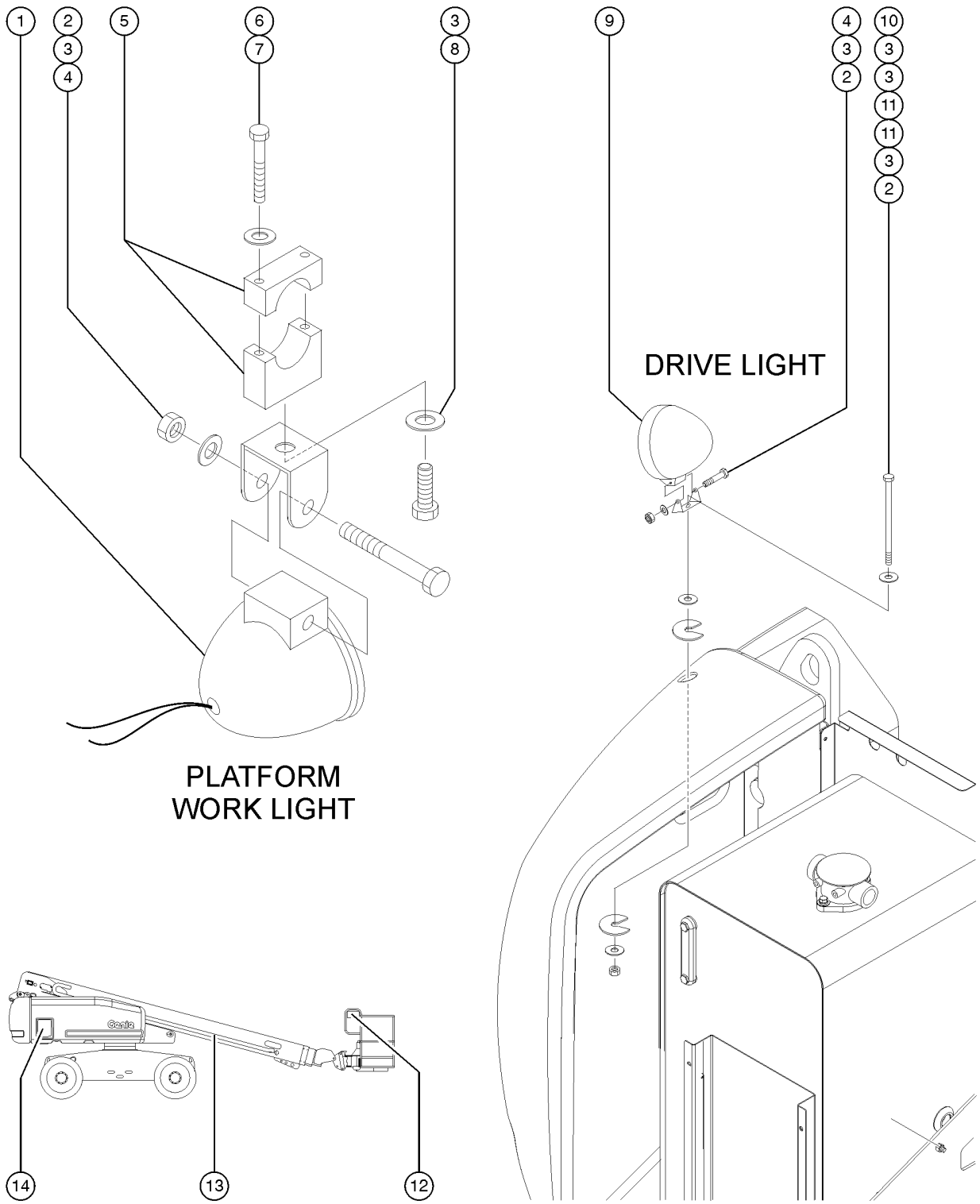
1
2
3
4
5
6
7
3
8
PLATFORM
WORK LIGHT
9
4
3
2
10
3
3
11
11
3
2
DRIVE LIGHT
14
13
12

Item	Part No.	Description	Qty.
1	71498GT	WORKLIGHT, 12V, DEUTSCH RECEPT includes mount (not available separately)	2
2	4828GT	NUT, NYLOCK, 3/8-16	
3	5397GT	WASHER, FLAT, USS, 5/16-18	
4	8178GT	SCREW, HHC, 3/8-16 X 2.5	
5	35956GT	WORK LIGHT MOUNTING BRACKET	
6	6145GT	SCREW, HHC, 1/4-20 X 1.5	
7	6356GT	WASHER, LOCK, .25	
8	10107GT	SCREW,HHC,5/16-18 X .75	
9	107857GT	LIGHT, 12 VOLT includes mount (not available separately) replaces 34321GT, customers may need to buy a mounting bracket (35956GT) and other hardware for complete install	2
9-	56051GT	WIRE CABLE,16/2,WHT/BLK,SJEOW	
9-	119065GT	CONN, RECEP, 2 WAY, DEUTSCH, DT	
9-	73713GT	TERMINAL, PIN, DT, 14-18 AWG, NICKEL, 0.095-0.150 OD, DEUTSCH, STRIP	
9-	60439GT	CONN, RECEP, 2 WAY, DEUTSCH, DT, LOCK	
10	8177GT	SCREW,HHC,1/2-13 X 1.5	
11	101661GT	WASHER,SPACER,NOTCHED	
12	T114627GT	HARNESS,12V WORK LIGHTS Work Light Wiring - from Platform box to Worklights	
13A	T114625GT	CABLE,S60 12VDC WORK LIGHT Work Light Wiring, S-60 - from Ground Ctrl box to Platform	
14	T114624GT	HARN,12V WORK LIGHT RELAY Work Light Wiring - Ground control box	

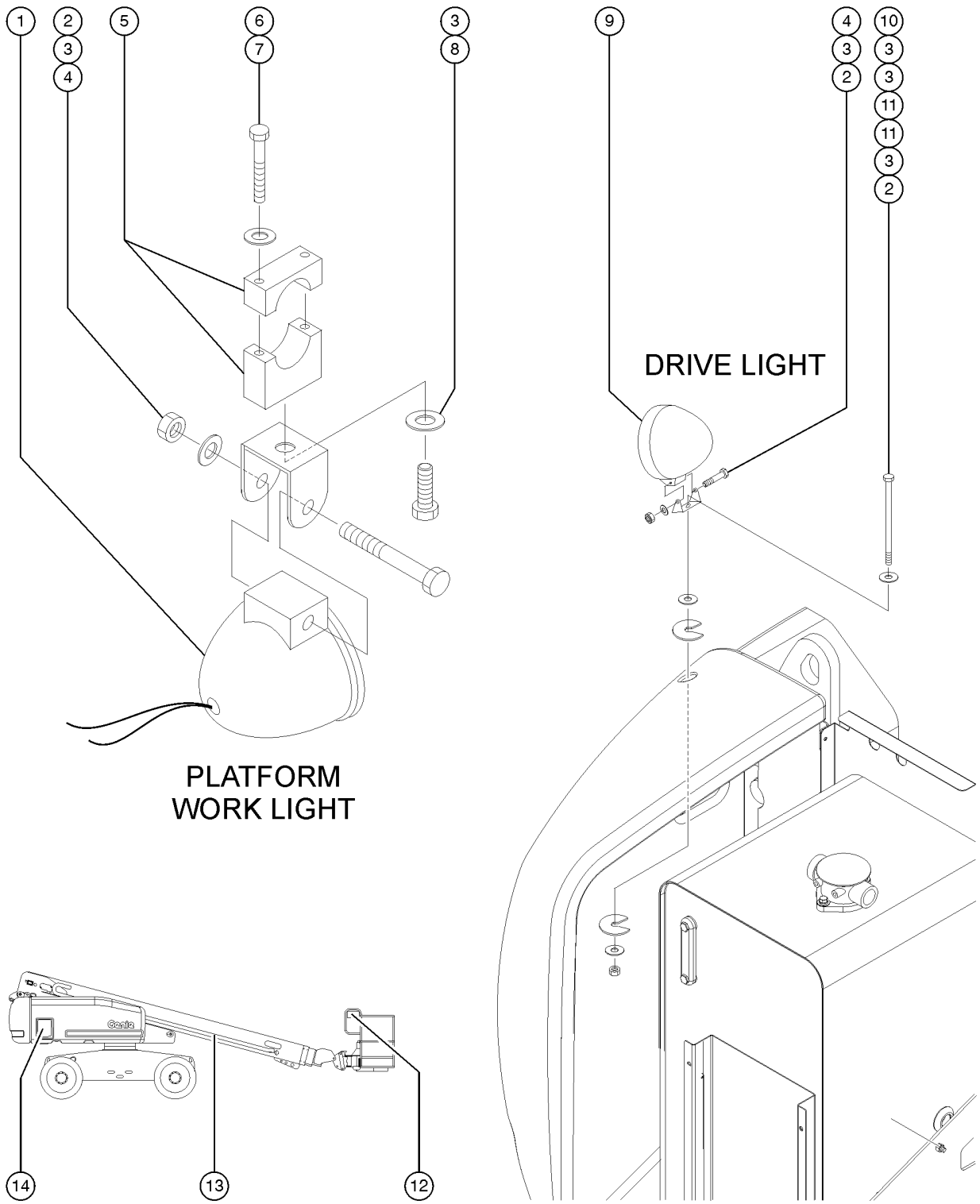
1
2
3
4
5
6
7
3
8
PLATFORM
WORK LIGHT
9
4
3
2
10
3
3
11
11
3
2
DRIVE LIGHT
14
13
12

Item	Part No.	Description	Qty.
1	71498GT	WORKLIGHT, 12V, DEUTSCH RECEPT includes mount (not available separately)	
2	4828GT	NUT, NYLOCK, 3/8-16	
3	5397GT	WASHER, FLAT, USS, 5/16-18	
4	8178GT	SCREW, HHC, 3/8-16 X 2.5	
5	35956GT	WORK LIGHT MOUNTING BRACKET	
6	6145GT	SCREW, HHC, 1/4-20 X 1.5	
7	6356GT	WASHER, LOCK, .25	
8	10107GT	SCREW,HHC,5/16-18 X .75	
9	107857GT	LIGHT, 12 VOLT includes mount (not available separately)replaces 34321GT, customers may need to buy a mounting bracket (35956GT) and other hardware for complete install	
9-	56051GT	WIRE CABLE,16/2,WHT/BLK,SJEOW	
9-	119065GT	CONN, RECEP, 2 WAY, DEUTSCH, DT	
9-	73713GT	TERMINAL, PIN, DT, 14-18 AWG, NICKEL, 0.095-0.150 OD, DEUTSCH, STRIP	
9-	60439GT	CONN, RECEP, 2 WAY, DEUTSCH, DT, LOCK	
10	8177GT	SCREW,HHC,1/2-13 X 1.5	
11	101661GT	WASHER,SPACER,NOTCHED	
12	T114627GT	HARNESS,12V WORK LIGHTS Work Light Wiring - from Platform box to Worklights	
13B	T114626GT	CABLE,S65 12VDC WORK LIGHT Work Light Wiring, S-65 - from Gr Ctrl box to Platform	
14	T114624GT	HARN,12V WORK LIGHT RELAY Work Light Wiring - Ground control box	

919.1 Generator Option

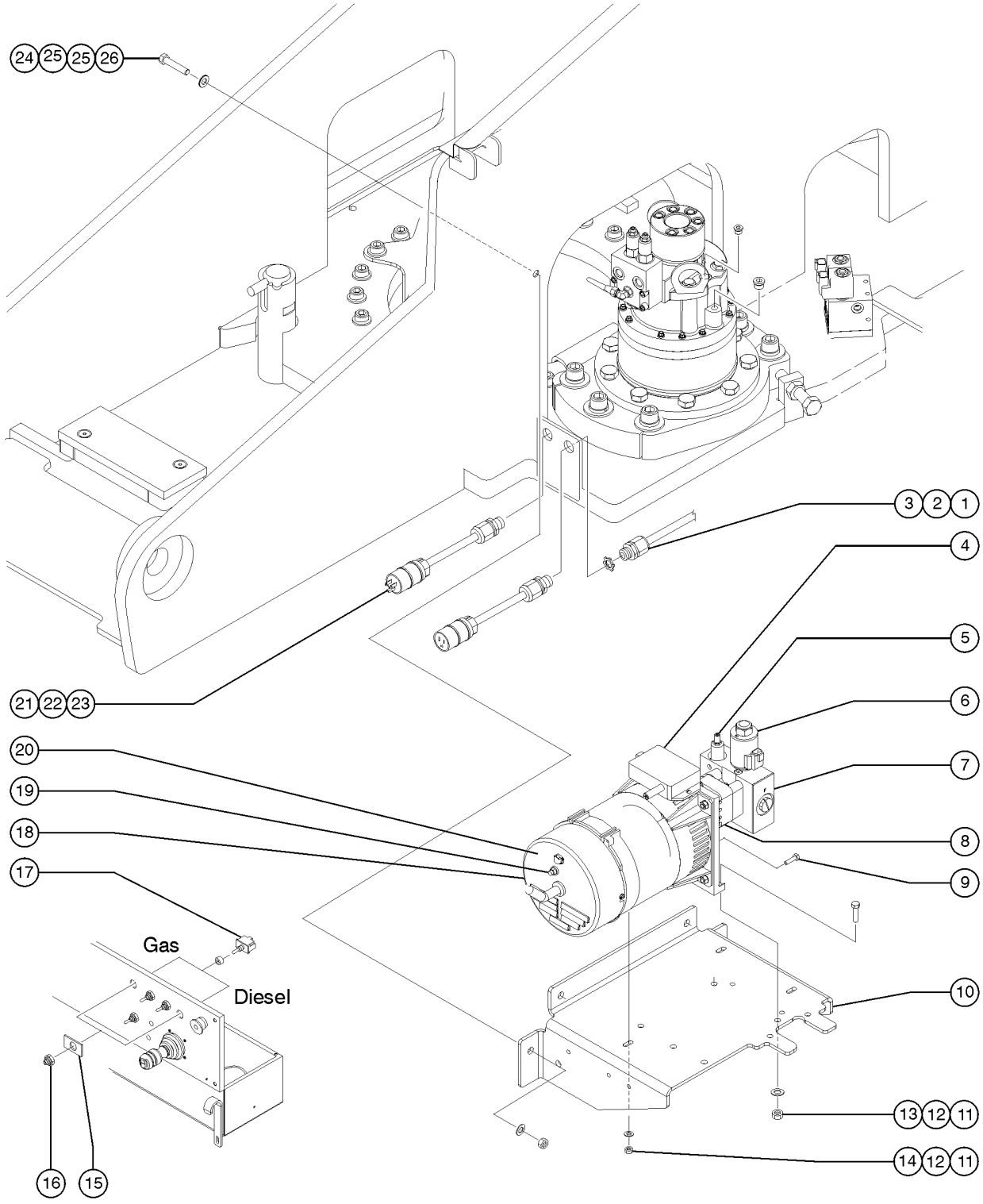

Item	Part No.	Description	Qty.
A	236923GT	FIELD KIT,MTE, 120V-50HZ, S60 only for European machines already equipped with an oil cooler	
B	216178GT	KIT,MTE&OIL COOL,120V50HZ,S60 only for European machines without an oil cooler	
C	236924GT	FIELD KIT,MTE, 240V-50HZ, S60 only for European machines already equipped with an oil cooler	
D	216181GT	KIT,MTE&OIL COOL,240V50HZ,S60 only for European machines without an oil cooler	
E	1271398GT	KIT,GEN. PRESSURE SWITCH	
1	14041GT	LOCKNUT,ELECTRIC,3/4" to SN 24244	1
1A	6935GT	CONN, SQZ, 1/2NPT, LOCKNUT from SN 24245	
2	12960GT	CABLE SQUEEZE CONN.,XTRA LRG to SN 24244	1
2A	7057GT	CONN. SQZ,1/2NPT .39-.56 MED. from SN 24245	
3	119404GT	CONN,RECEP 120AC/15A DOMESTIC	1
4	1269693GT	CONTROL BOX,2KW,120/240V,50HZ (part of generators 139952 and 139954)	1
4-	147228GT	CONTROLLER BOX, 120/240V, 60H (part of generator 139953)	
5	147233GT	VALVE, RELIEF, GEN, 3.0kW	1
6	147232GT	12VDC PROPORTIONAL VALVE	1
7	147229GT	MANIFOLD ASSEMBLY, GEN (complete, includes items 5 and 6)	1
8	147230GT	207 HYD MOTOR ASSY, GEN	1
8-	147231GT	SEAL KIT, HYD MOTOR, GEN	
9	147242GT	SCREW, GEN ROTOR	4
10	106114GT	BRACKET,GENERATOR12.5 KW,PNTD*	1
10-	56361GT	CABLE TIE,BUTTON,BLACK,14.75LG	1
11	6782GT	NUT, NYLOCK, 5/16-18	3
12	5397GT	WASHER, FLAT, USS, 5/16-18	3
13	13000GT	SCREW,HHC,5/16-18 X 1.25	2
14	13002GT	SCREW,HHC,5/16-18 X 1 GR5	1
15	133518GT	DECAL, PATCH, GEN,ALC-500	1
16	27246GT	BOOT,TOGGLE SWITCH,SHORT*	1
17	128204GT	SWITCH TOGGLE ASSY SPDT 2P MNT	1
18A	139952GT	GENERATOR, 3kW, 120V/50Hz (complete, includes items 4-9 and 19-20)	1

919.1 Generator Option

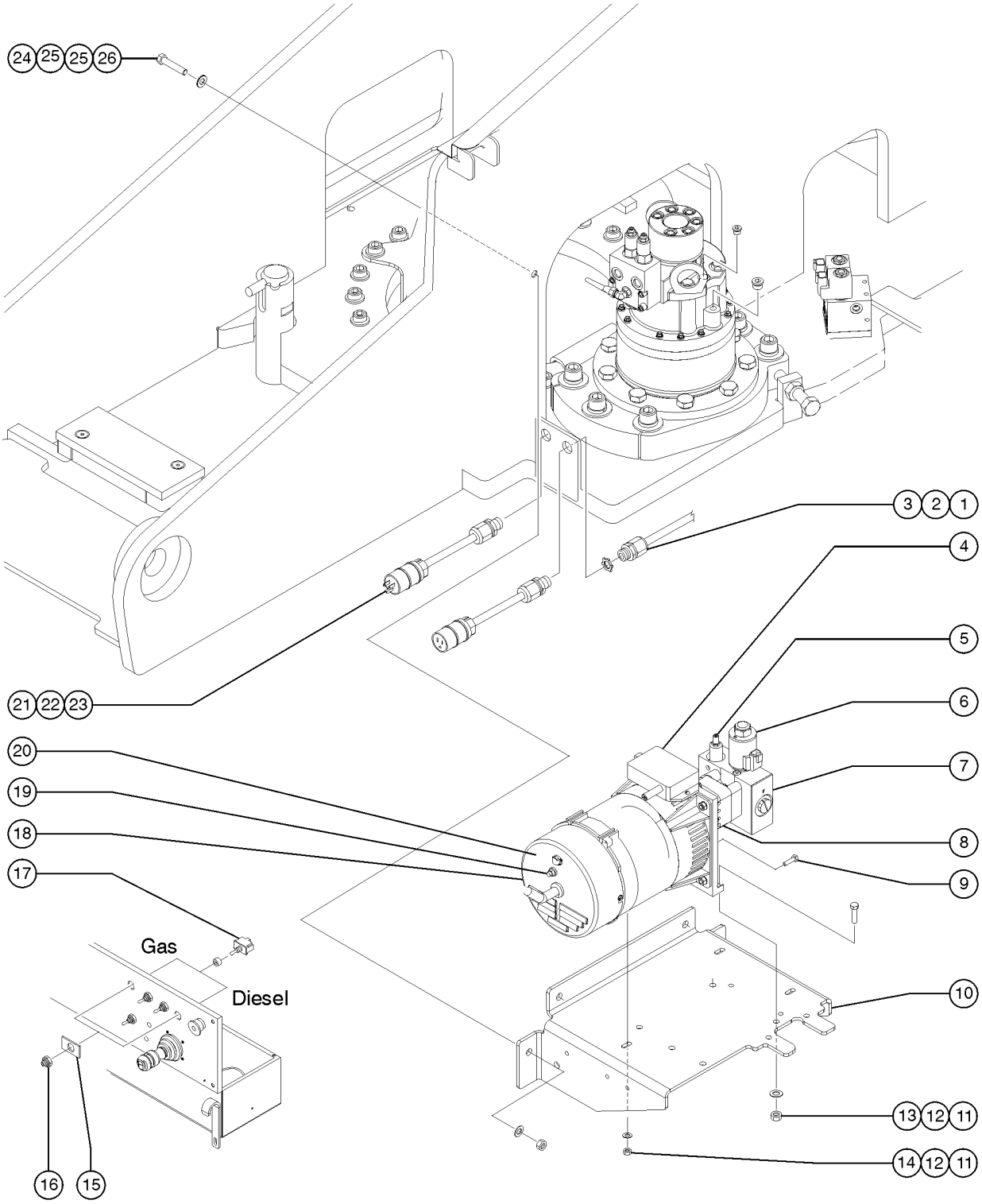

Item	Part No.	Description	Qty.
18B	139953GT	GENERATOR, 3kW, 120V/60Hz (complete, includes items 4-9 and 19-20)	1
18B-	147240GT	CAPACITOR 16 F, GEN	
18B-	147242GT	SCREW, GEN ROTOR	
18B-	119067GT	CONN, RECEP, 4 WAY, DEUTSCH, DT, ENDCAP	
18C	139954GT	GENERATOR, 3kW, 240V/50Hz (complete, includes items 4-9 and 19-20)	1
18D	822687GT	FIELD KIT,MTE 120V-60HZ, S60 for units with oil cooler already installed	1
18E	822688GT	KIT,MTE&OIL COOL,120V60HZ,S60 for units that do not already have an oil cooler installed	1
19	147239GT	BREAKER, 25 AMP, GEN (part of generators 139952 and 139953)	1
19-	147258GT	BREAKER,15 AMP,GEN (part of generator 139954)	
20	147241GT	COVER, END, GEN, 120V (part of generators 139952 and 139953)	1
20-	147262GT	COVER, END, GENERATOR, 240V (part of generator 139954)	
21	119403GT	CONN,PLUG 120 AC/15A DOMESTIC	1
22	61278GT	CONN. SQZ,1/2NPT .56-.63.	1
23	6935GT	CONN, SQZ, 1/2NPT, LOCKNUT	1
24	9145GT	SCREW,HHC,1/2-13 X 2.5,GR5	4
25	13066GT	WASHER,FLAT,.5 HARDENED	8
26	6198GT	NUT, NYLOCK, 1/2-13	4

920.1 Operator Protective Structure

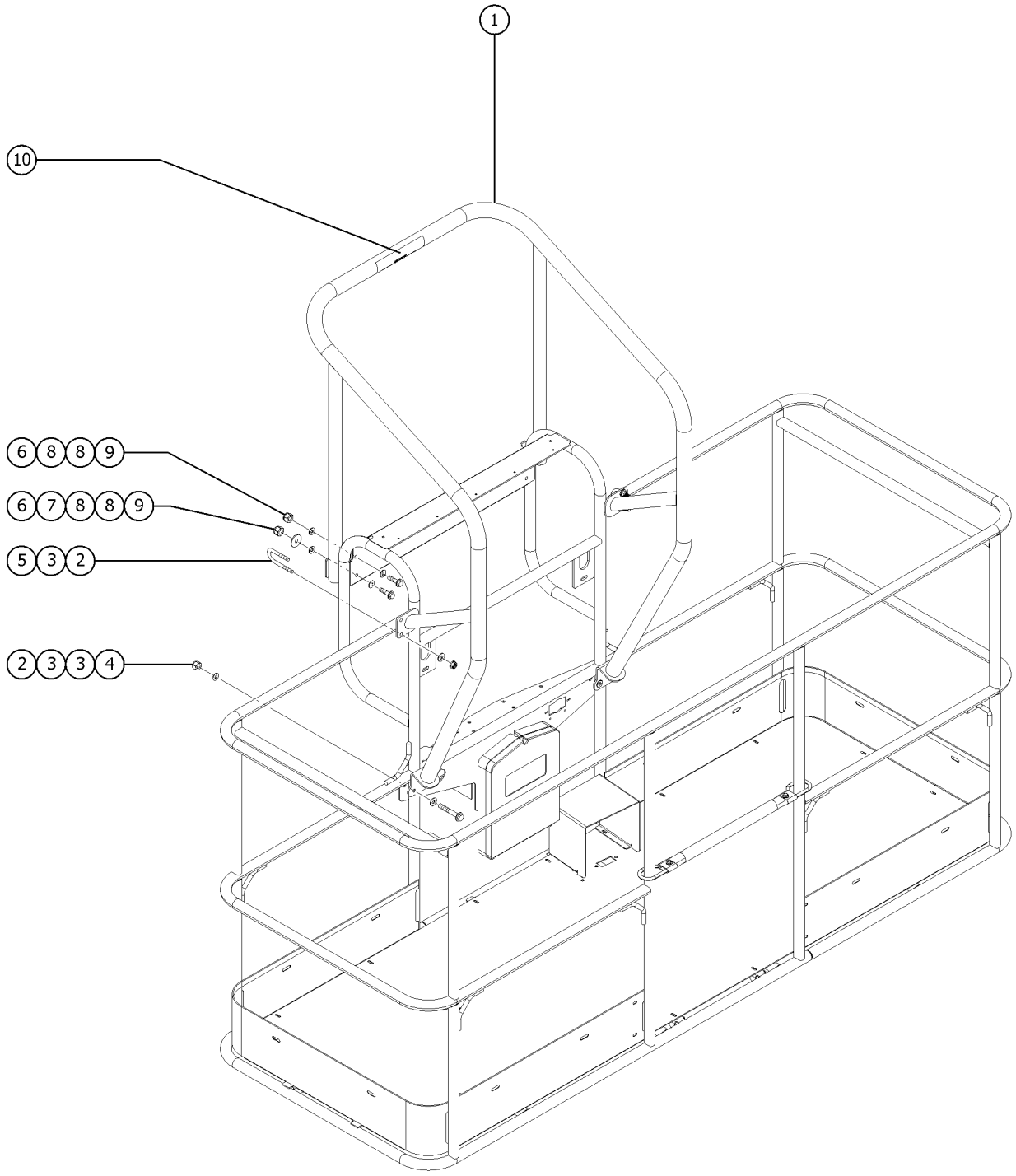

Item	Part No.	Description	Qty.
1	219158GT	ACCESSORY,OPERATOR PROT STRUCT (Complete) includes all fasteners	1
2	8178GT	SCREW, HHC, 3/8-16 X 2.5	4
3	6097GT	WASHER, FLAT, USS, 3/8", Y	12
4	4828GT	NUT, NYLOCK, 3/8-16	8
5	122755GT	UBOLT,FLATTENED,1.5DIAX3/8 UNC	2
6	6888GT	SCREW, HHC, 1/4-20 X 1	4
7	15086GT	WASHER,FLAT,.375 X 1.5 X .125 Use only with the platform control box cover option	2
8	6638GT	WASHER, FLAT, USS, 1/4"Y	8
9	6091GT	NUT,NYLOCK,1/4-20	4

921.1 Tow Package, S-60

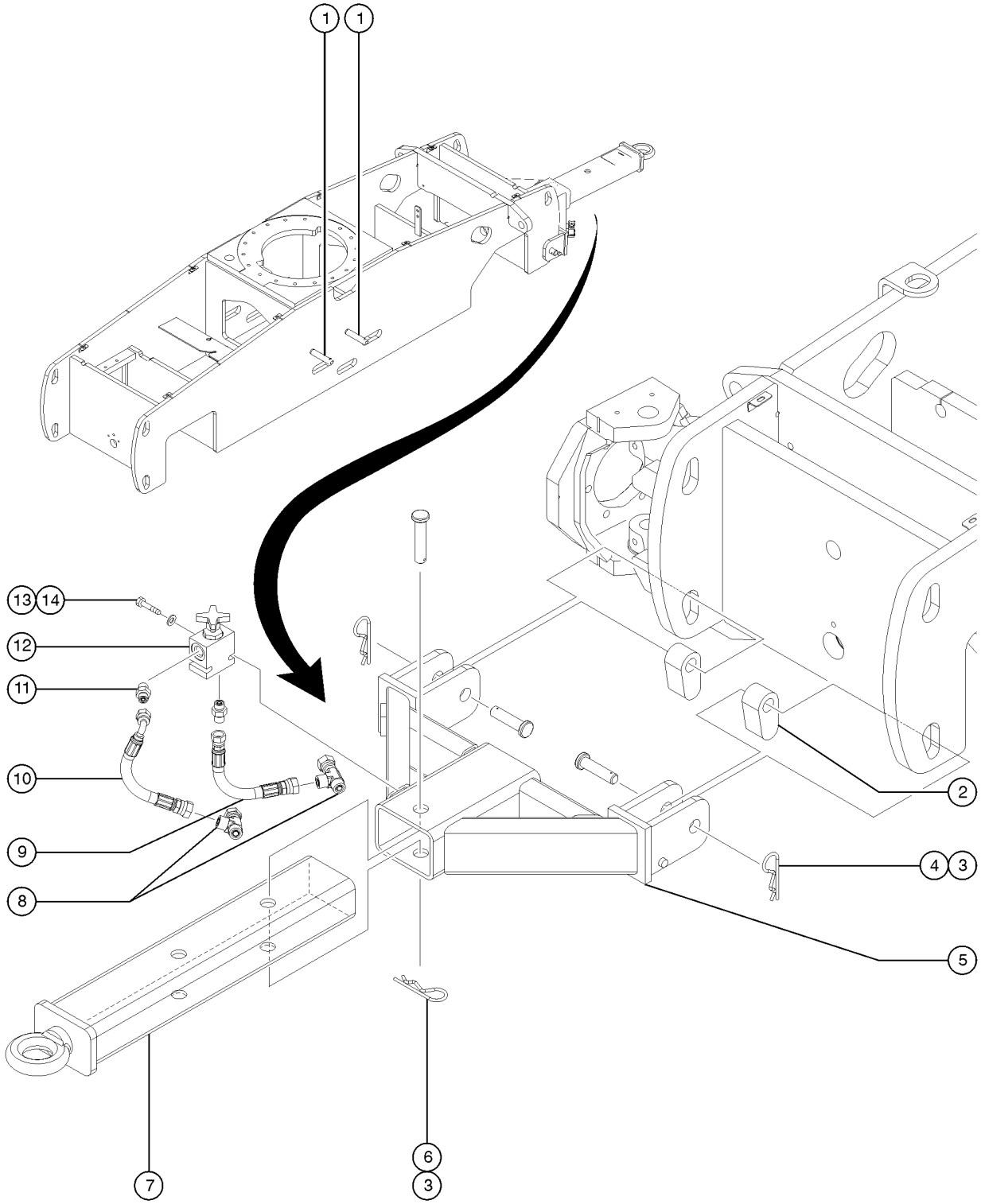

921.1 Tow Package, S-60

Item	Part No.	Description	Qty.
	77756GT	S60 TOW PACKAGE	
1	47025GT	PIN,STORAGE,TOW PACKAGE used to store 94420 WELDMENT,PULL BAR	2
2	81975PGT	PLATE,CHASSIS ATTACHMENT	
3	42111GT	CLIP,HAIR PIN .243 X 5.25	3
4	42113GT	PIN,CLEVIS,1.25 X 5.0,ZINC	2
5	77870GT	WELDMENT,TOW BAR	1
6	42112GT	PIN,CLEVIS,1.25 X 6.0,ZINC	1
7	94420GT	WELDMENT,PULL BAR	1
8	48875GT	TEE,RUN,SWIVEL,520432-6	2
9	49120-7131GT	HOSE ASSEMBLY,1/4" attach to right front steer cylinder	1
10	49163-7144GT	HOSE ASSEMBLY,1/4" includes 90-degree elbow fitting; attach to left steer cylinder	1
11	48912GT	CONN,520120-4-6***	2
12	25282GT	VALVE,NEEDLE,BRAKE RELEASE	1
13	824063GT	SCREW,HHC,1/4-20X1.75,8,ZAG	2
14	824113GT	WASHER,FLAT,USS,1/4,ZAG	2

922.1 Fall Arrest Bar

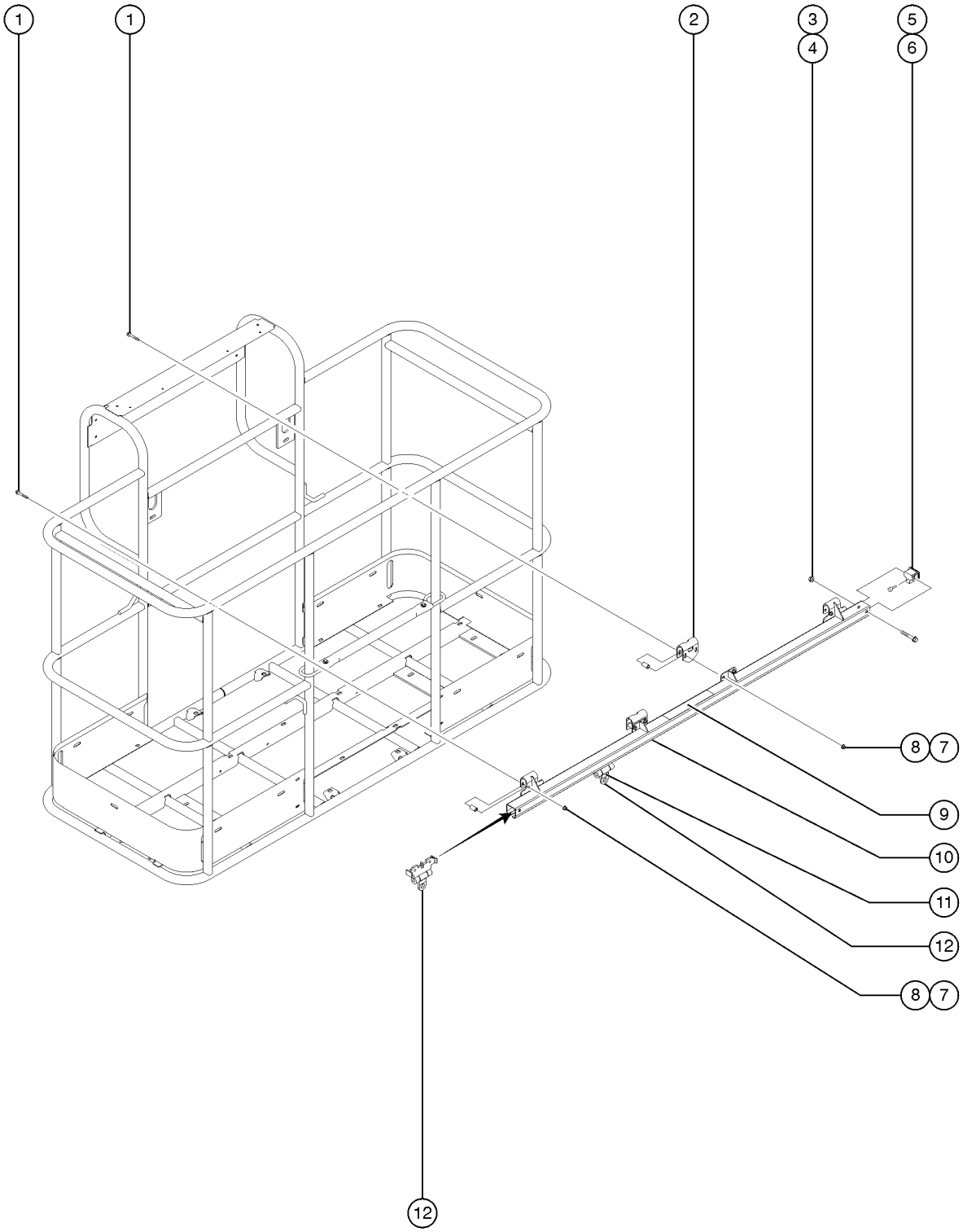

Item	Part No.	Description	Qty.
1	1256856GT	SCREW,HHF,3/8-16X2.5,8,ZAG	4
2	1256389GT	FORMING,INNER HANGER	2
3	1251997GT	NUT,TL FLG,1/2-13,G,ZAG	2
4	1256851GT	SCREW,HHF,1/2-13X3.5,8,ZAG	2
5	1260892GT	END STOP. TFAAS TRACK	2
6	36388GT	BUMPER,RUBBER,.75 X .50H,STUD	2
7	1274322GT	NUT,NYLOCK FLG,3/8-16,F,ZAG	8
8	1256481GT	SPACER, HANGER BRACKET	8
9A	1256400GT	DECAL,TFAAS TRACK,WORD	1
9B	1260910GT	DECAL,TFAAS TRACK,SYMBOL	1
9C	1256400FRGT	DECAL,TFAAS TRACK,WORD FR	1
10A	1256377GT	ACC,TFAAS FALL ARREST,8FT WORD includes instructions and decals	1
10A-	1256379GT	ASSY,TFAAS TRACK,8FT WORD includes decals	
10B	1261022GT	ACC,TFAAS FALL ARREST,8FT SYM includes instructions and decals	1
10B-	1261024GT	ASSY,TFAAS TRACK,8FT SYM includes decals	
10C	1261018GT	ACC,TFAAS FALL ARREST,8FT FR includes instructions and decals	1
10C-	1261020GT	ASSY,TFAAS TRACK,8FT FR includes decals	
10D	1256378GT	ACC,TFAAS FALL ARREST,6FT WORD includes instructions and decals	1
10D-	1256380GT	ASSY,TFAAS TRACK,6FT WORD includes decals	
10E	1261023GT	ACC,TFAAS FALL ARREST,6FT SYM includes instructions and decals	1
10E-	1261025GT	ASSY,TFAAS TRACK,6FT SYM includes decals	
10F	1261019GT	ACC,TFAAS FALL ARREST,6FT FR includes instructions and decals	1
10F-	1261021GT	ASSY,TFAAS TRACK,6FT FR includes decals	
11	40434GT	DECAL,LANYARD ANCHORAGE POINT	1
12	1256439GT	TROLLEY, TFAAS TRACK	1

923.1 Lift Guard Sensing Option (from SN S6012-24492)

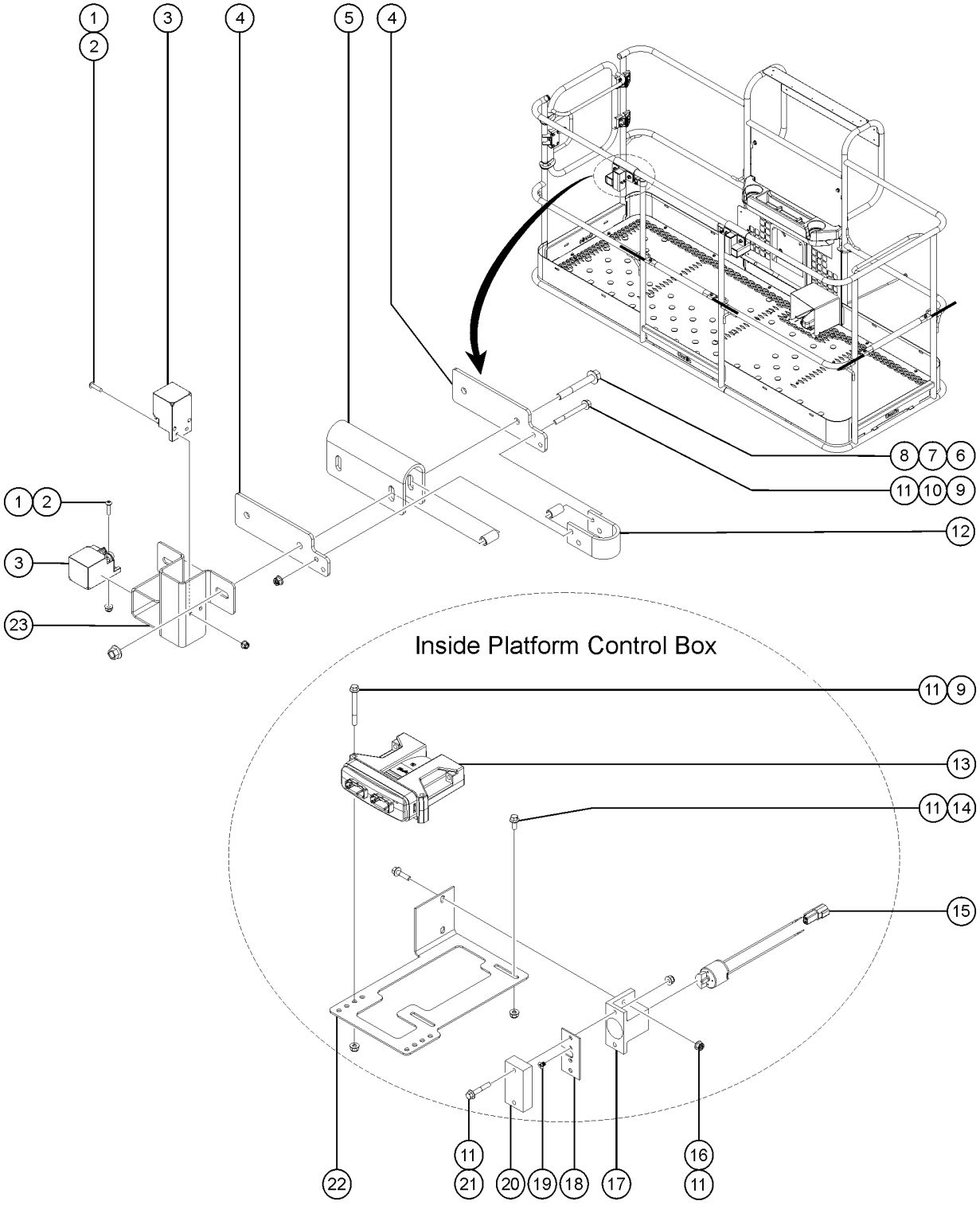

923.1 Lift Guard Sensing Option (from SN S6012-24492)

Item	Part No.	Description	Qty.
-	1294062GT	KIT, LIFT GUARD SENSOR	1
-	128200GT	SWITCH TOGGLE ASSY SPDT 3P MOM	1
-	1292829GT	ASSEMBLY, LED, RGB	1
1	1257195GT	SCREW,BHC,10-24X.75,F835,ZAG	8
2	1283004GT	NUT,NYLOCK FLG,10-24,A,ZAG	8
3	1292455GT	SENSOR, ULTRASONIC, 0-10V	4
4	1293332GT	PLATE, MOUNT	4
5	1293327GT	FORMING, UPPER HANGER	2
6	824094GT	SCREW, HHF, 3/8-16 X 2.75, 8, ZAG	4
7	1256481GT	SPACER, HANGER BRACKET	4
8	1274322GT	NUT,NYLOCK FLG,3/8-16,F,ZAG	4
9	824083GT	SCREW,HHF,1/4-20X2.5,8,ZAG	6
10	1294026GT	SPACER,LGS BRACKET	4
11	1277924GT	NUT,NYLOCK FLG,1/4-20,F,ZAG	12
12	1293331GT	FORMING, HANGER VERTICAL SUPPORT	2
13	1294139GT	MODULE, CTRL, PLUS1, MC024-120, LIFT GUARD SENSING	1
14	1256855	SCREW,HHF,1/4-20X.625,8,ZAG	2
15	1293290GT	ASSEMBLY, MOTOR, VIBRATION, 34mm	1
16	824079GT	SCREW,HHF,1/4-20X1,8,ZAG	2
17	1292505GT	HOUSING, VIBRATION MOTOR LGS, BODY	1
18	1294005GT	PLATE, VIBRATION MOTOR LGS	1
19	1294006GT	SCREW,PHPM,M3-0.5X4,DIN965	2
20	1294004GT	HOUSING, VIBRATION MOTOR LGS, CAP	1
21	824081GT	SCREW, HHF, 1/4-20 X 1.5, 8, ZAG	2
22	1294136GT	FORMING, PCON BOX BRACKET, LIFT GUARD SENSING	1
23	1293333GT	WELDMENT, LEFT BRACKET LGS (left)	1
23-	1293334GT	WELDMENT, RIGHT BRACKET LGS (right)	1

Part no.	Page Number
1487GT	459
1702GT	343
4266GT	217, 373, 459
4828GT	137, 147, 157, 167, 205, 209...
5224GT	137, 147, 157, 167, 213, 483
5365GT	187, 189, 319, 389
5397GT	207, 211, 221, 223, 229, 275...
5408GT	257
6002GT	329
6019GT	205, 209, 213, 327, 343, 367...
6021GT	137, 147, 157, 159, 167, 169...
6024GT	321, 325
6033GT	137, 147, 157, 167, 187, 189...
6036GT	225, 511
6037GT	493
6090GT	177, 185, 205, 209, 217, 221...
6091GT	187, 189, 205, 209, 215, 219...
6095GT	187, 189, 205, 209, 283, 293...
6096GT	229, 309
6097GT	137, 147, 157, 167, 205, 209...
6126GT	225
6145GT	313, 343, 375, 457, 523, 525
6146GT	205, 209, 221, 223, 291, 315...
6147GT	455
6175GT	137, 147, 159, 169, 171, 179...
6178GT	205, 209, 221, 223, 241, 257...
6179GT	257
6198GT	229, 283, 309, 313, 343, 353...
6326GT	137, 147, 157, 167
6356GT	231, 233, 237, 353, 361, 369...
6563GT	383
6584GT	187, 189, 285, 319
6605GT	373
6607GT	355, 361, 403, 407
6610GT	225
6637GT	353, 355, 361, 363, 473
6638GT	131, 141, 151, 161, 177, 185...
6782GT	221, 223, 283, 295, 327, 345...
6833GT	347, 483, 513, 517
6878GT	483
6884GT	395, 399
6888GT	207, 211, 215, 219, 223, 229...
6889GT	395, 399, 419, 423, 469, 483...
6935GT	461, 465, 527, 529
7056GT	461, 465
7057GT	241, 527
7268GT	383
7339GT	131, 141, 151, 161, 241, 339
7713GT	295, 403, 407
7746GT	457
8170GT	205
8177GT	137, 147, 157, 167, 275, 323...
8178GT	485, 523, 525, 531
8179GT	187, 189, 365, 395, 399
8255GT	137, 147, 157, 167, 229, 345...
8516GT	223, 313, 363, 367, 415
8887GT	497
8910GT	503
8915GT	215, 293, 379, 485
9145GT	495, 529
9596GT	459
9599-SGT	457
10107GT	493, 523, 525
10262GT	383
10597GT	205, 209, 257, 285, 309, 339...
10598GT	283, 293, 313
10775GT	461, 465
10777GT	461, 465
11210GT	355, 363
12343GT	401
12344GT	417, 421
12906GT	219, 223
12960GT	527
13000GT	303, 307, 337, 345, 405, 409...
13002GT	283, 293, 303, 325, 339, 405...
13003GT	321, 325
13064GT	137, 145, 157, 167, 171, 179...
13066GT	223, 273, 309, 323, 339, 355...
13268GT	243
13480-SGT	255
13482GT	403, 407
13585GT	461, 465
13597GT	479
13635-10GT	371, 395, 399
13854GT	353, 359
13918GT	345, 375
13921GT	511
14033GT	307, 339
14041GT	527
14392GT	479
15086GT	317, 345, 531
15243GT	241, 419, 421
18503GT	207, 211, 303, 307, 317, 337
18504GT	337
18506GT	329
18596GT	321, 325, 367, 371
18605GT	375
18665GT	493, 495, 499, 501
18666GT	417, 421, 499, 505
18716GT	349, 357
18717GT	353, 361
18720GT	349, 353, 357, 361, 365
18722GT	349, 353, 357, 361
18730GT	175, 183, 349, 357
18963GT	455
19358GT	317, 343
19363GT	313
19440GT	131, 141, 151, 161, 367
19491GT	351, 359, 367, 369
19506GT	233, 237
20262GT	403, 407
20776GT	493, 495, 499
20973-1700GT	257
21019GT	291, 315, 345
21130GT	187, 189, 285, 293, 295, 319
21141GT	207, 211
21465GT	315, 347
21496GT	187, 189
21604GT	389
21618GT	513, 517
21858GT	235, 239
22348GT	213
22558GT	283, 321, 325
22571GT	501
22578GT	319
22672GT	291, 293, 487

Part no.	Page Number
22692GT	307
22699GT	285, 309, 315, 323, 339, 345
22700GT	309, 313, 339, 345, 511
22788GT	343, 511
23057GT	291
23404GT	241, 417, 421
23405GT	487
24038GT	295, 315, 345
24040GT	283, 313
24514GT	405, 409
25235GT	61
25282GT	533
25368GT	313, 343
25388GT	463, 467
25548GT	309
25625GT	285
25683GT	377, 379, 381, 385, 387
25685GT	383, 389
25817GT	131, 141, 151, 161
25926GT	243, 303, 317
25927GT	315, 345
25969GT	353, 361
25994GT	13, 31, 49, 67, 85, 105
27067GT	133, 143, 153, 163, 175, 177...
27089GT	213, 285, 319
27204GT	17, 25, 35, 43, 53, 61...
27205GT	13, 23, 31, 41, 49, 59...
27206GT	13, 17, 23, 25, 31, 35...
27207GT	13, 17, 23, 25, 31, 35...
27246GT	411, 513, 519, 527
27287GT	243, 419, 423
27377GT	219, 223
27391GT	515
27497GT	217
27761GT	267
27802GT	261
27804GT	263
27807GT	261, 263
27836GT	261, 267
28117GT	191
28158GT	13, 23, 31, 41, 49, 59...
28159GT	13, 23, 31, 41, 49, 59...
28160GT	13, 23, 31, 41, 49, 59...
28161GT	13, 17, 19, 31, 35, 37...
28165GT	21, 39, 57, 75, 93, 113
28174GT	17, 21, 25, 29, 35, 39...
28175GT	17, 35, 53, 71, 89, 109
28176GT	21, 39, 57, 75, 93, 113
28177GT	21, 39, 57, 75, 93, 113
28181GT	19, 37, 55, 73, 91, 111
28235GT	17, 21, 25, 29, 35, 39...
28236GT	21, 39, 57, 75, 93, 113
28301GT	219, 223
28487GT	365
28607GT	471
28646GT	389
28853GT	475
29080GT	371
29104GT	13, 31, 49, 67, 85, 105
29559GT	281, 323
29560GT	281, 321
29764GT	207, 211, 255, 379, 391
29868GT	205, 209
30080GT	21, 39, 93, 113
30138GT	365, 371
30144GT	205, 209
30217GT	377, 381, 385, 387
30222GT	381
30255GT	377, 381, 385, 387
30370GT	353, 361, 365, 377, 383, 387
30468GT	459
30489GT	319
30490GT	215, 281, 319
30785-400GT	187, 189
30810GT	471
30971GT	283, 487
30973GT	205, 209, 221, 223
30997GT	241, 419, 423
31060GT	19, 37, 55, 73, 91, 111
31100GT	263
31120GT	459
31408GT	281, 475
31523GT	283
31788GT	13, 31, 49, 67, 85, 105
32064GT	337
32309GT	303, 333
32675GT	491, 499
32681GT	187, 189
32695GT	281
32698GT	283
32975GT	263
33239GT	283
33277GT	291, 313, 343
33278GT	225, 373
33418GT	225, 321, 325
33422GT	243
33428GT	137, 147, 159, 167, 379
33432GT	491, 499
33555GT	219, 223
33607GT	243
33608GT	243
33681GT	337
33724GT	465
33988GT	275
34052GT	241
34053GT	241
34058GT	471
34124GT	365
34125GT	371
34162-0400GT	489
34164GT	489
34245GT	365
34276GT	351, 357
34344GT	365, 367, 373
34505GT	487
34619GT	389
34922GT	487
34955GT	487
34959GT	489
35432GT	487
35461GT	461, 465
35586GT	283
35610GT	475
35675GT	225, 285, 315, 381
35726GT	279
35956GT	457, 523, 525

Part no.	Page Number
36208GT	339, 487
36294GT	355, 363
36388GT	485, 535
36456GT	343
37505GT	291
38149GT	31, 49, 67, 85, 105
38620GT	371
38621GT	367
38859GT	207, 211, 255
38922GT	307, 337
39317GT	397, 401
39479GT	187, 189, 345
39879GT	511
39882GT	231
40434GT	21, 29, 39, 47, 57, 65...
40614GT	241, 243
42014GT	137, 147, 159, 169, 175. 183...
42111GT	533
42112GT	533
42113GT	533
42288GT	235, 239, 415
42787GT	449
42790GT	445
43018GT	273
43181GT	253
43392GT	459
43683GT	275
43960GT	351, 359, 367, 369, 403. 407
44064GT	285, 347, 511
44174GT	273
44743GT	405, 409
44981GT	17, 21, 25, 29, 35, 39...
44986GT	21, 39, 93, 113
45071GT	137, 147, 159, 169, 191. 193
45074GT	137, 147, 157, 167
45363GT	205, 209
45383GT	413
45384GT	235, 239, 241, 413, 415
45385GT	241
45435GT	307, 337, 489
45454GT	307, 393
45470GT	375, 389
45489GT	263
45708GT	205, 209
45845GT	479, 481
45912GT	259, 261
45921GT	259
46131GT	309, 343
46188GT	517
47025GT	533
47041GT	13, 31, 49, 67, 85, 105
47222GT	375
48425GT	317, 343
48767GT	433
48875GT	533
48878GT	449, 473
48880GT	429, 435, 439, 443
48883GT	441
48891GT	443
48904GT	429, 433, 443
48905GT	429, 433, 437, 441, 443. 445
48907GT	429, 433
48908GT	433, 437, 441, 443, 445. 447
48911GT	433, 439, 441
48912GT	431, 437, 443, 533
48914GT	429, 443, 511
48915GT	437, 441
48916GT	429, 433, 437, 441
48918GT	437, 441
48930GT	437
48932GT	431, 451, 453, 499
48933GT	429, 433, 437, 441, 443. 445...
48935GT	445
48936GT	429, 437
48937GT	433, 445
48941GT	429, 451, 453
48943GT	431
48946GT	431
48948GT	437, 451, 453
48949GT	431
48960GT	429, 435, 437, 441, 445. 447...
48961GT	451, 453
48963GT	429, 445, 447, 451, 453. 499
48964GT	445
48975GT	511
48977GT	431
48978GT	451, 453
48984GT	429, 435, 449
48985GT	431
48996GT	431
48998GT	429, 435, 439
49117-2491GT	429
49117-3291GT	443
49117-3391GT	429
49117-3691GT	445
49117-3791GT	433
49117-3800GT	433
49117-4691GT	429, 443
49117-5191GT	443
49117-6091GT	439
49117-6119GT	447
49117-6291GT	437
49117-10091GT	437
49117-10691GT	439
49119-2878GT	429, 433
49119-4278GT	433
49119-7478GT	433
49119-7578GT	437, 441
49119-69825GT	435
49119-70978GT	435
49119-72078GT	433
49119-79678GT	433
49120-7131GT	533
49128-12309GT	433
49128-13809GT	433
49130-2482GT	437, 441
49130-4782GT	437, 441
49130-5582GT	429
49130-5782GT	429
49131-9603GT	437
49142-7112GT	445
49143-2979GT	445
49143-3179GT	445
49143-3429GT	431
49143-3629GT	431
49143-6213GT	451, 453, 497

Part no.	Page Number
49143-12329GT	433
49143-13829GT	433
49150-2855GT	449, 473
49150-9130GT	431
49151-6248GT	429, 449
49163-7144GT	533
49177-102894GT	461
49177-108894GT	465
49183-7592GT	447
49183-8492GT	451
49183-8500GT	453
49183-13492GT	433
49207GT	431, 443
49212GT	461, 465
49214GT	461, 465
49215GT	461, 465
49219GT	245, 251, 433
49364GT	295
49378GT	309, 339
49379GT	501
49381GT	343
49386GT	313
49407GT	319
49408GT	303, 313, 333
49410GT	293
49411GT	283, 291, 321, 325, 373
49418GT	433
49816GT	221, 223
49819GT	417, 421
49820GT	417, 421
49824GT	487
49826GT	393
49859GT	441, 443
49861GT	447
49915GT	325
49924GT	281, 321
50787-SGT	281, 319
51147GT	503
51580GT	451, 453
52352GT	321
52371GT	273
52607GT	13, 31, 49, 67, 85, 105
52661GT	457
52726GT	267
52865GT	31, 49, 67, 85, 105
52866GT	283, 289, 321
52897GT	273
52943GT	259, 261, 263, 265
52966GT	13, 23, 31, 41, 49, 59...
52967GT	13, 31, 41, 49, 59, 67...
53189GT	485
53386GT	137, 147, 159, 169
53758-SGT	471
53759-SGT	471
53761-SGT	471
53807-SGT	457
53808-SGT	457
53952GT	283, 289, 307, 337
54124GT	213
54177GT	371
54205GT	293
54247-SGT	403, 407
54260GT	351, 359
54274GT	403, 407
54322GT	205, 209
54365GT	241, 303, 419, 423, 501
54428GT	287
54437GT	293
54457GT	459
54486GT	457
54487PGT	291
54534GT	241
54578GT	293
54579GT	291
54687GT	291
55067GT	405, 409
55747GT	475
55753GT	457, 513, 517
56051GT	523, 525
56057GT	243
56361GT	375, 527
56424GT	405, 409, 459, 521
56426-700GT	513, 517
56445GT	253, 281, 319
56704GT	455
56848GT	411, 413, 415
56912GT	131, 141, 151, 161, 177, 185...
56934GT	521
57072GT	373
57075GT	461, 465
58247GT	307, 337
58249GT	319
58253GT	245, 427
58256GT	281, 319
58299GT	321
58303GT	259
58304GT	227
58308GT	395
58309GT	395
58310GT	395, 397, 401
58354GT	289
58380GT	231
58431GT	275
58489GT	215
58566GT	281
58596GT	229
58597GT	229
58627GT	233, 237
58630GT	319
58631GT	491, 499, 511
58632GT	305, 333
59460GT	131, 141, 151, 161
60160PGT	403, 407
60334GT	229
60370-SGT	381, 389
60425GT	351, 359, 479
60427GT	477
60429GT	351, 359
60439GT	369, 479, 523, 525
60441GT	477
60443GT	367
60445GT	257
60455GT	257
60585GT	295
60746GT	355, 361
60838GT	323

Part no.	Page Number
60857GT	229, 231
60868GT	293
60886PGT	461, 465
60984GT	257, 349
61072-2426GT	453, 497
61072-2443GT	451
61072-2526GT	453, 497
61072-2543GT	451
61073-2830GT	445
61073-3330GT	447
61073-3930GT	429
61073-7330GT	447
61074-6222GT	445
61074-7272GT	429
61074-7572GT	429
61110GT	323, 339
61128GT	225
61225GT	241, 475
61234GT	215
61240GT	215
61263GT	431
61278GT	529
61306-SGT	379
61602GT	349, 357
61610GT	451, 453
61726GT	389
61794GT	245, 427
61804GT	389
61972GT	389
61974GT	389
61975GT	389
61997GT	389
62076GT	19, 27
62077GT	17, 25, 53, 61, 71, 79...
62078GT	37, 45
62079GT	35, 43
62256GT	259
62257GT	261, 263
62258GT	263
62260GT	259
62273GT	259, 263, 265
62274GT	263
62275GT	259, 261
62276GT	263
62392GT	425, 427
62420GT	283, 289
62421GT	295
62425GT	321
62433GT	293
62476GT	325
62506GT	273
62507GT	273
62845GT	291
63078GTSB	365
63213GT	379
63311GT	459
63353GT	379
63375GT	461, 465
63463GT	283, 289
63468GT	175, 183
63566GT	377, 381, 385, 387
63727GT	487
63772GT	485
63773GT	485
65473GT	295, 315
65538GT	289
65636GT	295
65638GT	295
65887GT	217
66472GT	513, 517
66812GT	233, 237, 411
66813GT	233, 237, 413
66815GT	413
66816GT	413
66818GT	411
69775GT	287
69776GT	479
70264GT	397
70289GT	353, 361
70290GT	353, 361
70298GT	293
70317PGT	485
70318PGT	485
70319GT	485
70351PGT	283
70357GT	293
70367GT	289, 315, 347
70375GT	283
70381GT	285, 325
70385GT	285, 295
70444GT	323
70445GT	325
70448PGT	321
70449GT	323
70452GT	283, 313, 345
70453GT	281
70454PGT	325
70455GT	321
70456GT	325
70459PGT	283
70460PGT	281
70461PGT	283
70465GT	321
70472PGT	285
70483GT	325
70494PGT	283
70499GT	285
70529GT	489
71038GT	471
71259GT	473
71498GT	523, 525
71768GT	369
71911GT	309, 323, 325
72047GT	259, 263, 265
72168GT	13, 31, 49, 67, 85, 105
72169GT	13, 31, 49, 67, 85, 105
72255GT	281, 319
72282GT	455
72290GT	133, 143, 153, 163, 175. 177...
72326GT	207, 211, 413, 455
72327GT	347
72343GT	291, 297, 311, 339
72344GT	291
72348GT	289, 295
72875GT	21, 39, 57, 75, 93, 113...
72999GT	13, 31, 49, 67, 85, 105

Part no.	Page Number
73233GT	403, 407
73455GT	135, 145, 157, 167, 171. 179...
73463-1175GT	521
73477PGT	403, 407
73478PGT	403, 407
73500GT	459
73501GT	459
73574-SGT	405, 409
73575GT	403, 407
73587GT	403, 407
73599GT	343
73610PGT	403, 407, 469
73634GT	389
73713GT	367, 369, 523, 525
73717GT	243, 419, 421
73723GT	417, 421
73725GT	367
73736GT	243, 419, 421
73739GT	351, 359, 403, 407
73753GT	243
73754GT	243
73803GT	241, 419, 421
73805GT	233, 237
73807GT	273
73811GT	369
73814GT	351, 359
73928GT	207, 211, 255, 379, 391
74006GT	461, 465, 493, 501
74052GT	461
74254GT	255
74389GT	131, 141, 151, 161, 371
74872GT	365
74902GT	261, 263
74913GT	243
74917GT	243
74918GT	243
75041GT	355, 361, 479
75073GT	219, 223, 229
75076GT	219, 223
75159GT	313
75278-5029GT	437
75278-5129GT	437
75395GT	381
75443GT	425, 427
75444GT	425, 427
75445GT	425, 427
75446GT	425, 427
75447GT	425, 427
75448GT	425, 427
75449GT	425, 427
75450GT	321
75451GT	321
75470GT	353, 359
75574GT	435
75617-1538GT	519
75617-1675GT	513, 517
75617-2275GT	513, 517
75617-3138GT	519
75617-3238GT	513, 517
75617-4788GT	519
75617-6475GT	513, 517
75631GT	303, 333
75636GT	513, 517
75654GT	431
77051GT	365, 371
77069GT	215
77071GT	215
77180GT	405, 409
77181GT	379
77219GT	215
77245PGT	285
77295GT	307, 337
77303GT	377, 381, 385, 387
77351GT	419, 423
77353GT	207, 211
77354GT	207, 211
77365GT	207, 211
77382GT	475
77402GT	281, 293
77477GT	297
77482GT	295
77483GT	295
77610GT	137, 147, 157, 167
77616PGT	373
77618PGT	367
77623PGT	171, 179
77643GT	131, 141, 151, 161
77645PGT	205, 209
77646PGT	205, 209
77648GT	371
77649GT	371
77653PGT	369
77654PGT	365
77656GT	365, 371
77664GT	521
77665PGT	227
77666PGT	227
77671GT	225
77672GT	353, 361
77674GT	175, 177, 183, 185
77676GT	225
77679GT	215
77680GT	215
77681GT	215
77683GT	521
77685GT	503
77688GT	373
77692GT	381, 389
77693GT	473
77713PGT	373
77718GT	367, 373
77725GT	131, 141, 151, 161
77726GT	131, 141, 151, 161
77736GT	289
77756GT	533
77778GT	219, 223
77788GT	275
77790GT	131, 141, 151, 161
77791GT	131, 141, 151, 161
77795GT	367
77797GT	513, 517
77803GT	229
77870GT	533
77879PGT	485
77880GT	137, 147, 157, 167
77882PGT	369

Part no.	Page Number
77887GT	489
77891GT	489
77896GT	395
77950GT	171, 179
77990GT	295
77996PGT	485
77997PGT	485
77998PGT	485
79456GT	381
80543GT	493, 501
80716GT	235, 239
81005GT	231
81096GT	461, 465
81164GT	131, 141, 151, 153, 161
81167GT	485
81175GT	381
81341GT	395, 399
81342GT	395, 399
81347GT	395, 399
81458GT	461, 465
81467GT	321
81468GT	321
81487PGT	419, 423
81488GT	417, 421
81532GT	513
81550GT	419, 423
81551GT	419, 423
81552GT	187, 189
81570GT	465
81578GT	205, 209
81640GT	379
81691GT	187, 189
81694GT	353, 359
81724GT	229
81777GT	395, 399
81812-13292GT	437
81834GT	227
81856GT	367
81874GT	219, 223
81876GT	219, 223
81975PGT	533
82161GT	13, 31, 49, 67, 85, 105
82237GT	17, 21, 35, 39, 53, 57...
82240GT	23, 41, 59, 77, 97, 115...
82243GT	21, 39, 57, 75, 93, 113
82366GT	13, 31, 49, 67, 85, 105
82410GT	21, 39, 57, 75, 93, 113
82431GT	275
82472GT	23, 25, 27, 41, 43, 45...
82473GT	25, 43, 61, 79, 99, 117...
82481GT	23, 41, 59, 77, 97, 115...
82487GT	23, 29, 41, 47, 65, 77...
82548GT	29, 47, 65, 83, 103, 121...
82551GT	23, 25, 41, 43, 59, 61...
82552GT	23, 25, 41, 43, 59, 61
82601GT	29, 47, 103, 121
82602GT	47, 65, 83, 103, 121
82604GT	29, 47, 103, 121, 129
82671GT	25, 29, 43, 47, 61, 65...
82677GT	31, 35, 49, 53
82678GT	31, 35, 49, 53
82862GT	21, 39, 57, 75, 93, 113
82967GT	23
83129GT	245, 427
84134GT	267
84135GT	267
85053GT	285, 323
85054GT	285
85155GT	289
85300GT	459
87085GT	397, 401
87172GT	449
87246GT	511
88064GT	319
88106PGT	221, 223
88212GT	225
88296GT	177, 185
88356-11103GT	351, 359
88356-13103GT	227, 367
88356-14963GT	369
88377-1400GT	521
88384GT	513, 517
88385GT	513, 517
88390GT	513, 517
88406GT	503, 509
88450GT	307
88451GT	301, 329
88452GT	301, 329
88514GT	395
88516GT	377, 381
88567GT	371
88568GT	365
88571GT	365
88576GT	377
88606PGT	457
88607PGT	457
88636-2573GT	435
88636-8573GT	443
88636-11973GT	433
88653GT	349, 357
88666GT	351, 359
88667GT	365
88668GT	353, 359
88675GT	351, 359
88676GT	349, 357
88684GT	213
88705GT	395
88727GT	131, 141, 151, 161
88728GT	131, 141, 151, 161
88729GT	131, 141, 151, 161
88730GT	131, 141, 151, 161
88783GT	267
88785GT	277
88793GT	371
88795PGT	367
88796GT	371
88801GT	247, 253
88802GT	247, 253
88810GT	247, 251
88827GT	233, 237
88841GT	293
88846GT	289
88847GT	289
88858GT	397, 401
88859GT	395, 399
88870GT	377, 381, 385, 387

Part no.	Page Number
88872GT	349, 357
88884GT	133, 143, 153, 163, 175. 183
88885GT	177, 185
88887GT	133, 143, 153, 163, 171. 179
88888GT	207, 211
88889GT	207, 211, 255
88917GT	207, 211
88919GT	353, 361, 365
88920GT	349, 357
88936GT	431
88942-8354GT	431
88943-7636GT	431
88949-3828GT	429, 449
88988PGT	291
88989PGT	295
88990PGT	291
88991PGT	293
88993GT	293
89294GT	131, 141, 151, 161, 191. 193
89295GT	137, 147, 159, 167
89307GT	259, 263, 265
89309GT	259, 261
89310GT	259, 261
89311GT	259, 263, 265
89571GT	225
89575GT	241
89617GT	215
89736GT	263
89755GT	389
89765GT	291
89771GT	293
89792GT	285
89861GT	261
89862GT	273
89864GT	273
89871-4048GT	453, 497
89953GT	291, 293
89977GT	503
89997GT	323
94077GT	213
94205-3164GT	449, 473
94221GT	137, 147, 159, 167
94326GT	389
94332GT	131, 141, 151, 161
94333GT	131, 141, 151, 153, 161
94374-2330GT	441
94374-2430GT	437
94374-2530GT	441
94374-2630GT	437
94374-4730GT	441
94374-6030GT	431, 451, 453
94397GT	381
94420GT	533
94439GT	191, 193
94463GT	487
94464-4186GT	443
94464-4986GT	437, 441
94465-3650GT	429
94466-2336GT	437, 441
94479GT	487
94485GT	281
94493-SGT	521
94499GT	259
94506GT	411
94507GT	131, 141, 151, 161
94508GT	171, 179
94510GT	371
94526GT	207, 211
94533GT	487
94534GT	131, 141, 151, 161
94535GT	131, 141, 151, 161
94536GT	131, 141, 151, 161
94537GT	487
94598GT	263
94599GT	261, 263
94620GT	229
94692GT	365
94711GT	291
94745PGT	405, 409, 469
94747GT	225
94751GT	269
94752GT	269
94753GT	269
94754GT	269
94756GT	269
94757GT	269, 491
94758GT	267
94759GT	277, 279, 493
94760GT	277, 491, 499
94761GT	277
94762GT	293
94764GT	277
94765GT	277, 491, 493, 499
94869GT	469
94887GT	289
94888GT	291
94890GT	289
94937GT	225
94980GT	247, 253, 257, 355, 361
96008-SGT	233, 237
97128GT	351, 359, 367
97473GT	289
97548GT	17, 35, 53, 71, 89, 109
97579GT	21, 39
97602GT	17, 35, 53, 71, 89, 109
97815GT	21, 29, 39, 47, 57, 65...
97875GT	17, 21, 35, 39, 53, 57...
97887GT	39, 57, 75, 93, 113
99778GT	477
101005GT	425
101005HGT	425
101006GT	283
101066PGT	373
101080GT	245, 251
101129PGT	285
101140P-SGT	283
101173GT	425, 427
101173HGT	425, 427
101174GT	425, 427
101174HGT	425, 427
101191GT	245, 251
101199-200GT	477, 479, 481
101232GT	471
101244GT	381
101251GT	365
101252GT	257, 349, 357

Part no.	Page Number
101253GT	353, 359
101254GT	377, 381, 385, 387
101293GT	449
101294GT	275
101440GT	267
101446GT	269
101491GT	431
101494GT	431
101516GT	491, 499
101525GT	503, 507
101540GT	225, 285, 315
101547PGT	503, 507
101661GT	523, 525
101701GT	505
101701PGT	509
101726GT	213
101729GT	313
101730GT	313
101731PGT	503
101732GT	503
101790-10091GT	437
101790-10691GT	439
101795-2482GT	437
101795-4782GT	441
101845GT	389
101932GT	483
101947GT	493
101964GT	221, 223
101973GT	469
102045GT	321, 325
102066GT	345
102119GT	313
102121GT	309, 337
102126GT	133, 143, 153, 163, 171, 173...
102131GT	133, 143, 153, 155, 163, 165...
102155GT	133, 143, 153, 163, 177, 183...
102157GT	133, 143, 153, 163, 173, 181
102158GT	133, 133, 143, 145, 153, 155...
102159GT	133, 143, 153, 163, 177, 183...
102162GT	133, 143, 153, 155, 163, 165...
102163GT	133, 143, 153, 163, 171, 179
102164GT	133, 143, 153, 163, 171, 179
102166GT	133, 143, 153, 163, 175, 181
102167GT	133, 143, 153, 163, 171, 173...
102209PGT	327
102215GT	397
102216GT	397
102227GT	319
102230-9589GT	437
102237PGT	323
102313-3326GT	451
102357GT	243
102516GT	133, 143, 153, 163, 171, 173...
102581GT	325
102684GT	133, 143, 153, 163, 171, 179
102721PGT	469
102746GT	493, 499
102785PGT	457
102786PGT	459
102992GT	405, 409
104030GT	417, 421
104759GT	273
106003PGT	295
106033GT	471
106044GT	503, 507, 513, 517
106073GT	493, 501
106077GT	495, 501
106098GT	133, 143, 153, 163, 175, 177...
106099GT	487
106104GT	493, 501
106108GT	493
106109PGT	505, 509
106110GT	503
106111GT	503
106112GT	503
106113GT	491
106114GT	493, 527
106114pGT	501
106115GT	503
106117GT	133, 143, 153, 163, 175, 177...
106134GT	355, 363
106140PGT	243
106141GT	505, 507
106154GT	397
106163GT	405, 409
106172PGT	229
106183GT	503, 507
106184GT	491
106203GT	497
106204PGT	505, 509
106206GT	501
106226-4000GT	289, 315
106226GT	347
106272GT	497
106273GT	507
106275GT	503, 507
106374GT	493
106375GT	495
106394GT	493, 499
106399GT	383
106477GT	493
106495GT	493, 499
106516GT	137, 147, 159, 169
106517PGT	139, 149, 159, 169
106520GT	491, 499
106521GT	497
106522GT	497
106523GT	497
106607GT	497, 507
106637GT	243
106647GT	133, 141, 153, 161
106648GT	133, 143, 153, 163
106657GT	243
106663GT	289
106766GT	383
106835GT	275
106836GT	275
106837GT	275
106883PGT	257
106884GT	257
107552GT	247, 251
107615PGT	131, 141, 151, 161
107616PGT	139, 147, 159, 169
107665PGT	367
107753GT	259
107813GT	275

Part no.	Page Number
107814GT	275
107815GT	275
107825GT	257, 349
107842GT	275
107857GT	523, 525
107868PGT	395
109802GT	231
110183PGT	319
110194GT	263, 267
110196GT	261
110197GT	261, 263
110200GT	261, 263
110201GT	263
110202GT	259, 261
110221GT	137, 147, 157, 167
110268GT	247, 251
110276GT	507
110280GT	241
110304GT	295
110329GT	257
110339GT	373
110340GT	373
110345GT	207, 211
110382GT	213
110390GT	245
110406GT	315, 345
110407GT	311, 339
110413GT	315
110414GT	315
110416GT	315
110417PGT	315, 345
110419GT	315
110421GT	307
110422GT	307
110423GT	315
110424GT	311
110452GT	355, 361
110477GT	345
110480GT	309
110578GT	137, 147, 157, 167
110671GT	405, 409
110727GT	133, 143, 153, 163
110728GT	133, 143, 153, 163
110730GT	133, 143, 153, 163
110731GT	133, 143, 153, 163
110733GT	133, 143, 153, 163
110755GT	257
110758GT	307
110768GT	305
110777GT	309
110784GT	383
110785GT	383
110789GT	383, 389
110803GT	245
110890PGT	313
110892PGT	313
110899GT	289
110908GT	355, 363
110919GT	313
110987GT	245
110988GT	245
110991GT	255
110992GT	255
110995GT	315
110996PGT	229
110997GT	315
111029GT	291
111155GT	199
111341GT	315
111402GT	319
111413GT	417, 421
111420GT	417, 421
111445GT	285, 321
111485PGT	457
111486PGT	459
111526GT	457
111614GT	307
111615GT	309
111634GT	307, 337
111666GT	311
111668GT	285, 319
111705GT	261
111748GT	339
111818GT	213
111819GT	217
112283GT	313
112285GT	309
112400GT	317
114098GT	129
114099GT	13, 17, 23, 25, 31, 35...
114169GT	17, 35, 53, 71, 89, 109
114219GT	13, 31, 49, 67, 79, 85...
114240GT	123
114241GT	123
114247GT	27, 45, 63, 81, 101, 119...
114249GT	23, 25, 41, 43, 59, 61...
114251GT	23, 41, 59, 77, 97, 115...
114252GT	27, 29, 45, 47, 59, 63...
114258GT	13, 31, 49, 67, 85, 105
114277GT	17, 25, 35, 43, 53, 61...
114349GT	77
114389GT	13, 21, 31, 39, 49, 57...
114390GT	13, 17, 31, 35, 51, 53...
114416GT	21, 39, 57, 75, 93, 113
114465GT	13, 23, 33, 41, 85, 97...
114473GT	29, 47, 65, 83, 103, 121...
115431GT	289, 315
119044GT	257
119051GT	309, 339
119052GT	309, 339
119053GT	307, 315, 317
119055GT	317, 343
119056GT	351, 359, 479, 497
119057GT	477
119058GT	351, 359, 403, 407
119065GT	369, 479, 523, 525
119066GT	477
119067GT	367, 529
119068GT	257
119073GT	317
119084GT	483
119085GT	483
119086GT	483
119087GT	483
119088GT	483
119089GT	483

Part no.	Page Number
119090GT	483
119117GT	281, 323
119135GT	299
119138GT	303
119139GT	301, 331
119142GT	299
119146GT	137, 147, 159, 169
119153GT	303
119169GT	313
119170GT	215
119218GT	345
119223GT	309
119230GT	383
119231GT	475
119232GT	313, 343
119234GT	311
119238GT	307
119344GT	285
119403GT	463, 467, 481, 529
119404GT	463, 467, 527
119417GT	471
119418GT	471
119463GT	309
119465GT	299
119466GT	299
119468GT	303
119469GT	303
119471GT	303
119472GT	299
119473GT	303
119474GT	303, 333
119475GT	301, 329
119477GT	317, 333
119478GT	299
119479GT	299
119481GT	299
119483GT	247, 251
119484GT	309, 345
119495GT	299
119496GT	303
119497GT	299
119498GT	299
119500GT	299
119535GT	393
119536PGT	379
119537GT	393
119542GT	379
119544GT	303
119546GT	313, 329
119547GT	299
119548GT	299
119551GT	299
119560GT	419, 423
119567GT	365
119568GT	301, 329
119588GT	303
119607GT	245
119613GT	425
119641GT	419, 423
119644GT	417, 421
119777GT	247, 251
119826GT	313
119838GT	395
119845GT	461, 465
119846GT	491
119866GT	295
119915GT	425, 427
119918GT	213
119964GT	303
119965GT	329
119988GT	177, 185
119990GT	353, 361
121035GT	401
121065GT	401
121599GT	243
121615GT	319
121831GT	485
121846GT	241
121847GT	417, 421
121848GT	245, 251, 389
122019GT	455
122053GT	247, 251
122073GT	457, 517
122079GT	379, 383, 387, 391
122231GT	517
122278GT	457
122279GT	457
122302GT	493
122661GT	401
122662GT	401
122663GT	401
122668GT	401
122755GT	405, 409, 503, 531
122944GT	377, 381
123143GT	383, 387
123663GT	383, 387
125864GT	191, 193
125865GT	191, 193
125866GT	195, 197
128000GT	425, 427
128001GT	425, 427
128002GT	309
128003GT	293
128004GT	325
128021GT	309
128022GT	293
128023GT	285
128024GT	293
128025GT	293
128045GT	241
128050GT	491, 497
128061GT	339
128081GT	213
128146GT	475
128165GT	299, 329
128166GT	299, 329, 331
128200GT	233, 237, 411, 413, 537
128201GT	235, 239, 411
128202GT	233, 235, 237, 239, 413
128203GT	513, 519
128204GT	233, 237, 411, 413, 415, 419...
128268GT	381
128274GT	475
128322GT	505, 507
128323GT	505, 507
128365GT	475

Part no.	Page Number
128368GT	459
128416GT	269, 493
128417GT	269
128418GT	269
128419GT	277, 491
128420GT	277
128423GT	275
128454PGT	381
128464GT	257, 349
128482GT	379
128483GT	381
128534GT	379
128578GT	411
128580GT	411, 413, 415
128581-SGT	411
128582-SGT	413
128584-SGT	411, 413, 415
128588GT	293
128724GT	381
128829GT	319, 323
128831GT	289
128896GT	319
128909GT	201
128910GT	201
128911GT	201
128912GT	201
128913GT	201
128914GT	201
128916GT	201
128917GT	201
128918GT	201
128919GT	201
128920GT	201
128921GT	201
128922GT	199
128923GT	199
128924GT	201
128925GT	199
128926GT	199
128927GT	201
128928GT	199
128935GT	241
128955GT	201
128984GT	295
128985GT	295
128986GT	295
128987GT	289
128991GT	295
131589GT	315
133067GT	23, 25, 41, 43, 59, 61...
133238GT	17, 35, 53, 71, 89, 109
133250GT	85, 89, 105, 109
133251GT	87, 89, 97, 99
133252GT	107, 109, 115, 117
133253GT	91, 101
133254GT	111, 119
133259GT	89, 99
133260GT	109, 117
133263GT	97, 99, 115, 117
133278GT	13, 33, 51, 67, 87, 107
133387GT	29, 47, 65, 83, 103, 121...
133413GT	23, 41, 97, 115, 123
133518GT	527
139000GT	191, 193, 199
139001GT	191, 193, 199
139002GT	191, 193, 195, 197
139120GT	191, 193
139121GT	191, 193
139122GT	191, 193
139125GT	191, 193
139135GT	191, 193, 195, 197
139140GT	191, 193, 195, 197
139175GT	195, 197
139179GT	191, 193, 195, 197, 199
139181GT	513, 517
139224GT	191, 193
139248GT	383
139262GT	199
139288GT	371
139293GT	393
139307GT	393
139308GT	227
139309GT	227
139310GT	227
139311GT	227
139312GT	229
139313GT	229
139314GT	229
139315GT	227
139321GT	321
139322GT	319
139323GT	227
139338GT	411, 413, 417, 421
139366GT	257
139367GT	491, 497
139384GT	371
139385GT	371
139438GT	469
139440GT	257
139441GT	257
139455GT	319
139508GT	271
139512GT	271
139527GT	271
139528GT	271
139578GT	187, 189
139598GT	425, 427
139601GT	349, 357
139602GT	349, 357
139610GT	307, 339
139621GT	281
139622GT	281
139623GT	281
139624GT	285
139644-14B61GT	375
139666GT	285
139709GT	281, 325
139712GT	271
139715GT	271
139716GT	271
139717GT	271
139718GT	271
139719GT	271
139727GT	271
139731GT	253
139732GT	247

Part no.	Page Number
139733GT	251
139734GT	245
139735GT	251
139736GT	245
139737GT	251
139738GT	245
139741GT	247, 253
139790GT	395
139791GT	395
139793GT	353, 361
139799GT	275
139801GT	275
139832GT	245, 251
139833GT	247, 251
139834GT	247, 251
139835GT	245, 251
139836GT	245, 251
139865GT	175, 183, 227
139878GT	471
139882GT	513, 519
139900GT	219, 223
139902GT	219, 223
139904GT	513, 517
139919GT	491, 497, 511
139952GT	527
139953GT	529
139954GT	529
139958GT	457
139963GT	259
139965GT	135, 145, 155, 165, 173, 181
139966GT	135, 145, 155, 157, 165, 173...
139967GT	135, 145, 155, 157, 165, 173...
139968GT	135, 145, 155, 157, 165, 167...
139969GT	135, 145, 155, 157, 165, 167...
139970GT	135, 145, 155, 157, 165, 167...
139971GT	135, 145, 155, 157, 165, 167...
139972GT	135, 145, 155, 157, 165. 167...
139983GT	325
144161GT	463, 467
146061GT	325
146284GT	493, 495, 499
146285GT	493, 499
146413GT	213
146417GT	213
146478GT	411
146551GT	213
146552GT	213
147015GT	309
147016GT	301, 309
147031GT	247, 253
147033GT	135, 145, 155, 157, 165, 167...
147034GT	135, 145, 155, 157, 165. 167...
147094GT	235, 239
147121GT	403, 407
147149GT	191, 193
147155GT	199
147223GT	207, 211
147228GT	527
147229GT	527
147230GT	527
147231GT	527
147232GT	527
147233GT	527
147239GT	529
147240GT	529
147241GT	529
147242GT	527, 529
147243GT	285
147255GT	247, 253
147258GT	529
147262GT	529
147289GT	215
147290GT	215
147300GT	245, 251
147347GT	387
147348GT	289
147350GT	289
147351GT	289
147352GT	289
147353GT	289
147355GT	295
147370GT	383
147396GT	249, 253
147403GT	369
147404GT	499, 511
147405GT	499, 511
147418GT	491, 511
147419GT	431
147428GT	247, 251
147455GT	243
147504GT	375
147525GT	281
147526GT	281
147549GT	275
147550GT	275
147571GT	355, 363
147575GT	57, 65
147578GT	375
147601GT	93, 103
147602GT	75, 83
147603GT	21, 29, 39, 47, 93, 103...
147604GT	129
147605GT	51, 57
147607GT	87, 93
147608GT	67, 75
147609GT	57
147610GT	93
147612GT	75
147617GT	365
147642GT	245, 251
147643GT	245, 251
147644GT	485
147646GT	247, 253
147647GT	247, 253
147650GT	245, 251
147652GT	245, 251
147654GT	247, 253
147657GT	253
147658GT	55, 63
147660GT	73, 81
147755GT	51, 59
147756GT	69, 77
147783GT	483
147788GT	59, 65
147790GT	97, 103
147791GT	77, 83

Part no.	Page Number
147792GT	13, 17, 33, 35, 69, 71
147793GT	51, 57, 69, 75, 87, 93
147794GT	87, 97
147795GT	51
147796GT	69
147797GT	87
147826GT	293
147834GT	353, 361
147840GT	233, 237
147842GT	355, 361
160541GT	339
160804GT	405, 409
160809GT	405, 409
161144GT	279
161145GT	279
161541GT	405, 409
161542GT	405, 409
161611GT	291
161613GT	225
162006GT	491
162023GT	49
214249GT	479
214410GT	479
214411GT	479
214446GT	339
214536GT	479
214619GT	507
214620GT	507
214621GT	507
214622GT	507
214623GT	507
214690GT	371
214796GT	299
214798GT	299
214803GT	299
215269GT	333
215270GT	333
215271GT	333
215273GT	333
215274GT	333
215275GT	331
215276GT	333
215277GT	335
215278GT	331
215279GT	333
215280GT	329
215281GT	329
215282GT	329
215283GT	329
215284GT	329
215285GT	329
215286GT	329
215287GT	331
215288GT	333
215289GT	333
215290GT	333
215291GT	333
215294GT	329
215295GT	329
215298GT	299, 317, 333
215299GT	331
215300GT	331
215301GT	331
215302GT	331
215305GT	331
215307GT	333
215308GT	331
215309GT	331
215310GT	331
215311GT	333
215313GT	333
215314GT	331
215316GT	343
215317GT	343
215320GT	337
215340GT	133, 143, 153, 155, 163, 165...
215347GT	479
215423GT	203
215424GT	201
215425GT	201
215426GT	201
215427GT	201
215528GT	339
215544GT	339
215642GT	133, 143, 155, 165, 171, 173...
215709GT	339
215747GT	469
215748GT	469
216019GT	345
216178GT	527
216181GT	527
216367GT	337
216368GT	337
216602GT	279
216606GT	479
216607GT	481
216611GT	477
216612GT	477
216615GT	477
216616GT	477
216617GT	479
216618GT	479
216655GT	479
216662GT	477
216676GT	479
216683GT	477
217043GT	241
217044GT	243
217045GT	243
217046GT	243
217366GT	505, 507
217439GT	497
217440GT	507
217820GT	329
217822GT	335
217823GT	331
217979GT	199
218448GT	401
218576GT	339
218668GT	337
218742GT	337
219158GT	531
219243GT	279
219245GT	279
219247GT	279
219437GT	317, 343

Part no.	Page Number
219477GT	343
220229GT	329
220230GT	329
220231GT	329
226325GT	399
226393GT	455
226541GT	383, 387
226542GT	383, 387
226940GT	201
226941GT	203
226942GT	203
226943GT	203
226944GT	201
226945GT	203
226946GT	201
227125GT	363
227288GT	13, 21, 33, 39, 87, 93...
227306GT	399
227307GT	399
227308GT	399
227309GT	333
227424GT	495, 501
227425GT	495, 501
227426GT	495
227532GT	493, 497
227785GT	175, 183
227988GT	307, 337
228320GT	497, 503, 507
228321GT	503, 507
228322GT	247
228323GT	253
228332GT	501
228448GT	517, 519
228463GT	235, 239
228768GT	153, 163
228769GT	153, 163
228796GT	399
228797GT	399
228848GT	521
228849GT	521
228967GT	401
228969GT	401
229169GT	401
229201GT	215
229202GT	215
229203GT	215
229204GT	215
229205GT	215
229567GT	233, 237, 411
229743GT	15, 17, 23, 25, 51, 53...
229744GT	69, 71, 77, 79, 123, 125
229817GT	155, 165, 173, 181
229818GT	155, 165, 173, 181
229931GT	155, 165, 173, 181
230072GT	375
230329GT	375
230331GT	375
230392GT	207, 211
230497GT	355, 363
230849GT	135, 145, 157, 165, 175, 183
231012GT	479
231013GT	479
231014GT	477
231015GT	477
231513GT	297
231612GT	135, 145, 155, 165, 175, 183
231653GT	397
233365GT	299
233437GT	299
233992GT	521
233993GT	521
234005GT	299
234006GT	299
234242GT	387
235323GT	419, 423
235372GT	33, 35, 41, 43
235411GT	419
235659GT	337
236338GT	339
236339GT	347
236340GT	343
236341GT	339
236364GT	345
236373GT	335
236420GT	345
236421GT	347
236422GT	343
236423GT	343
236425GT	345
236474GT	477
236475GT	477
236832GT	341
236911GT	215
236912GT	215
236923GT	527
236924GT	527
236946GT	281
237068GT	205, 209
237146GT	337
237251GT	337
237379GT	345
237385GT	345
237780GT	343
237832GT	297
237856GT	305, 347
237857GT	305, 347
237858GT	305, 347
237859GT	305, 347
238123GT	477
238234GT	345
815852GT	355, 363
822515GT	293
822687GT	529
822688GT	529
823816GT	335
823917GT	251
823918GT	245
824027GT	457, 499, 507
824028GT	497, 507
824029GT	509
824038GT	521
824063GT	533
824066GT	497
824075GT	383, 387
824078GT	509
824079GT	499, 537

Part no.	Page Number
824081GT	537
824083GT	537
824085GT	499
824087GT	499
824094GT	537
824113GT	507, 533
824227GT	457, 459
824546GT	353, 361
824547GT	399
824548GT	399
824549GT	401
824550GT	353, 361
824551GT	381
824879GT	233, 235, 237, 239, 411. 413
824880GT	411, 415
824882GT	233, 237
825019GT	137, 147, 157, 167, 229. 377...
825020GT	383, 389
825358GT	507
825796GT	137, 147, 159, 169, 367. 371
826214GT	297
826215GT	297
826379GT	371
1000014GT	33, 39, 107, 113
1000199GT	127
1000262GT	21, 39, 57, 75, 93, 113
1251600GT	521
1251643GT	21, 39, 57, 75, 93, 111
1251997GT	497, 535
1252943GT	295
1254639GT	349, 357
1254826GT	281, 321
1254874GT	403, 407
1255452GT	137, 147, 159, 169, 351. 357
1255653GT	281, 321
1255768GT	227
1255769GT	227
1255770GT	227
1255771GT	227
1255772GT	227
1255773GT	227
1255802GT	497
1256267GT	137, 147, 157, 167, 171. 179...
1256377GT	535
1256378GT	535
1256379GT	535
1256380GT	535
1256389GT	535
1256400FRGT	535
1256400GT	535
1256439GT	535
1256481GT	535, 537
1256670GT	273
1256851GT	535
1256855	521, 537
1256856GT	535
1257080GT	349, 353, 357, 361
1257195GT	537
1257227GT	499
1257422GT	407
1259704GT	457
1260082GT	135, 145, 157, 167, 175. 183
1260084GT	133, 143, 155, 165, 173. 181
1260218GT	249
1260511GT	193
1260892GT	535
1260910GT	535
1261018GT	535
1261019GT	535
1261020GT	535
1261021GT	535
1261022GT	535
1261023GT	535
1261024GT	535
1261025GT	535
1261389GT	203
1261390GT	203
1261391GT	203
1261392GT	203
1261393GT	201
1261394GT	201
1262331GT	257, 349, 357
1262469GT	289
1262484GT	295
1262585GT	291
1264257GT	395, 399
1264258GT	395, 399
1264822GT	245, 251
1264834GT	245, 251
1264894GT	331
1264947GT	213, 249
1267807GT	229
1268229GT	229
1268376GT	349, 357
1268377GT	349, 357
1269500GT	425, 427
1269693GT	527
1271398GT	495, 499, 527
1272019GT	217
1273323GT	491, 497
1274322GT	521, 535, 537
1274613GT	135, 155, 173
1276694GT	491, 497
1277924GT	521, 537
1277968GT	331
1277969GT	331
1277991GT	307, 337
1279465GT	231
1279466GT	231
1280590GT	319
1280591GT	319
1280665GT	463, 467
1283004GT	537
1283533GT	175, 183
1283571GT	333
1283572GT	333
1283573GT	333
1283574GT	333
1283575GT	333
1285235GT	207, 211
1285506GT	275
1286043GT	275
1287434GT	271
1287812GT	201
1287813GT	201
1287846GT	477

Part no.	Page Number
1288561GT	285
1290135GT	459
1292455GT	537
1292505GT	537
1292829GT	537
1293290GT	537
1293327GT	537
1293331GT	537
1293332GT	537
1293333GT	537
1293334GT	537
1294004GT	537
1294005GT	537
1294006GT	537
1294026GT	537
1294062GT	537
1294136GT	537
1294139GT	537
1294827GT	345
1296264GT	29, 47, 65, 83, 101, 121...
1300536GT	307, 333
1300882GT	301
1302962GT	349, 357
1303581GT	205, 209
1303585GT	209
1313038GT	329
1313039GT	329
1313040GT	329
1313693GT	199
1313694GT	199
1313695GT	199
1313696GT	199
1313697GT	199
1313698GT	199
1313699GT	199
1313700GT	199
1313701GT	199
1313702GT	199
1313703GT	199
1313704GT	199
1313705GT	199
1313706GT	199
1313707GT	199
1313708GT	201
1313709GT	201
1314265GT	291
1314781GT	355
1315824GT	227
1316077GT	303
1316635GT	213
1330530GT	203
9990606GT	275
9990607GT	275
9990608GT	275
NOTE:GT	477
T106385GT	375
T106413GT	353, 361
T106425GT	229
T106508GT	353, 361
T106600GT	247, 253
T106741GT	247, 249, 253
T106954GT	225
T106955GT	225
T106957GT	225
T106961GT	225
T106962GT	225
T107130GT	241, 247, 253
T107520GT	235, 239
T107725GT	233, 235, 237, 239
T107751GT	355, 363
T107829GT	207, 211
T107895GT	487
T108075GT	377, 381, 383, 387
T108076GT	379
T108077GT	379
T108321GT	247, 253
T108322GT	247, 253
T108331GT	205, 209
T108332GT	219
T108333GT	219
T108334GT	219
T108335GT	219
T108336GT	219
T108337GT	219
T108338GT	219
T108339GT	219
T108340GT	219
T108341GT	219
T108342GT	219, 223
T108343GT	219, 223
T108344GT	219, 223
T108345GT	219, 223
T108347GT	235, 239
T108348GT	235, 239
T108349GT	235, 239
T108351GT	235, 239
T108403GT	205, 209
T108415GT	247, 253
T108416GT	247, 253
T108732GT	325
T108733GT	325
T108734GT	325
T108886GT	247, 253
T108890GT	365
T108891GT	365
T108892GT	379
T109267GT	213
T109268GT	455
T109328GT	457
T109331GT	461, 465
T109332GT	471
T109333GT	471
T109334GT	471
T109335GT	473
T109339GT	489
T109340GT	489
T109341GT	417, 421
T109342GT	417
T109343GT	417
T109344GT	417
T109345GT	417
T109346GT	417, 421
T109347GT	417
T109348GT	417
T109349GT	417
T109350GT	419, 423

Part no.	Page Number	Part no.	Page Number	Part no.	Page Number
T111124GT	377, 381, 385, 387				
T112018GT	313				
T112459GT	375				
T112560GT	461, 465				
T112561GT	461, 465				
T112563GT	461, 465				
T112626GT	425, 427				
T112773GT	21, 29, 39, 47, 57, 65...				
T113129GT	503				
T113655GT	491				
T114022GT	491				
T114023GT	491				
T114145GT	503				
T114223GT	399				
T114624GT	249, 253, 523, 525				
T114625GT	249, 523				
T114626GT	253, 525				
T114627GT	249, 253, 523, 525				
T114678GT	281, 319				
T115352GT	419, 423				
T115605GT	353, 361				

California Proposition 65

WARNING

Operating, servicing and maintaining this equipment, passenger vehicle or off-highway motor vehicle can expose you to chemicals including engine exhaust, carbon monoxide, phthalates, and lead, which are known to the State of California to cause cancer and birth defects or other reproductive harm. These chemicals can be emitted from or contained in other various parts and systems, fluids and some component wear by-products. To minimize exposure, avoid breathing exhaust, do not idle the engine except as necessary, service your equipment and vehicle in a well-ventilated area and wear gloves or wash your hands frequently when servicing your equipment or vehicle and after operation. For more information go to www.P65Warnings.ca.gov/passenger-vehicle.

Breathing diesel engine exhaust exposes you to chemicals known to the State of California to cause cancer and birth defects or other reproductive harm.

- Always start and operate the engine in a well-ventilated area.
- If in an enclosed area, vent the exhaust to the outside.
- Do not modify or tamper with the exhaust system.
- Do not idle the engine except as necessary.

For more information go to www.P65warnings.ca.gov/diesel.

Distributed By: